LOUISIANA DEPARTMENT OF
TRANSPORTATION & DEVELOPMENT

BRIDGE DESIGN AND EVALUATION MANUAL

HEUY P. LONG BRIDGE

ST. ANN BRIDGE- SWING SPAN

BAYOU LAFOURCHE BRIDGE

DOTD VISION :

"TO DELIVER TRANSPORTATION AND PUBLIC WORKS SYSTEM THAT ENHANCE QUALITY OF LIFE AND FACILITATE ECONOMIC GROWTH"...

JOHN JAMES AUDUBON BRIDGE

I-10 TWIN SPAN BRIDGE

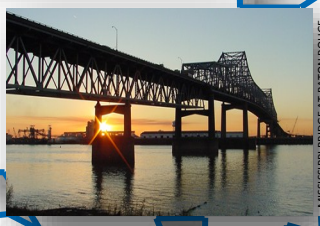

MISSISSIPPI BRIDGE AT BATON ROUGE

LADOTD BRIDGE DESIGN AND EVALUATION MANUAL (BDEM)

INDEX

PREFACE

REVISION HISTORY

PART I POLICIES AND PROCEDURES

CHAPTER 1 BRIDGE DESIGN TECHNICAL MEMORANDA

CHAPTER 2 BRIDGE DESIGN COMMITTEES

CHAPTER 3 POLICY FOR QUALITY CONTROL AND QUALITY ASSURANCE (QC/QA)

CHAPTER 4 HIGHWAY BRIDGE PROGRAMS AND LIGHTING PROGRAMS

CHAPTER 5 GENERAL BRIDGE DESIGN GUIDELINES

CHAPTER 6 DESIGN POLICY FOR BRIDGE REHABILITATION/REPAIR PROJECTS

CHAPTER 7 PROJECT DELIVERY

CHAPTER 8 PLAN PREPARATION

CHAPTER 9 STANDARD PLANS AND SPECIAL DETAILS

CHAPTER 10 CONSULTANT CONTRACTING

PART II DESIGN SPECIFICATIONS

VOLUME 1 BRIDGE DESIGN

CHAPTER 1 INTRODUCTION

CHAPTER 2 GENERAL DESIGN AND LOCATION FEATURES

CHAPTER 3 LOADS AND LOAD FACTORS

CHAPTER 4 STRUCTURAL ANALYSIS AND EVALUATION

CHAPTER 5 CONCRETE STRUCTURES

CHAPTER 6 STEEL STRUCTURES

CHAPTER 7 ALUMINUM STRUCTURES

CHAPTER 8 WOOD STRUCTURES

CHAPTER 9 DECKS AND DECK SYSTEMS

CHAPTER 10 FOUNDATIONS

CHAPTER 11 ABUTMENTS, PIERS, AND WALLS

CHAPTER 12 BURIED STRUCTURES AND TUNNEL LINERS

CHAPTER 13 RAILINGS

CHAPTER 14 JOINTS AND BEARINGS

VOLUME 2 MOVABLE BRIDGE DESIGN

CHAPTER 1 GENERAL PROVISIONS

CHAPTER 2 STRUCTURAL DESIGN

CHAPTER 3 SEISMIC DESIGN

CHAPTER 4 VESSEL COLLISION CONSIDERATIONS

CHAPTER 5 MECHANICAL DESIGN LOADS AND POWER REQUIREMENTS

CHAPTER 6 MECHANICAL DESIGN

CHAPTER 7 HYDRAULIC DESIGN

CHAPTER 8 ELECTRICAL DESIGN

VOLUME 3 STRUCTURAL SUPPORTS FOR PERMANENT HIGHWAY SIGNS AND HIGH MAST LIGHTING

VOLUME 4 HIGHWAY SAFETY

VOLUME 5 BRIDGE EVALUATION/RATING

PART III DESIGN AND DETAIL AIDS

CHAPTER 1 LG GIRDER PRELIMINARY DESIGN CHARTS

CHAPTER 2 LADOTD DECK DESIGN TABLES

PART IV BACKGROUND INFORMATION

CHAPTER 1 LADV-11 DEVELOPMENT

CHAPTER 2 TEMPERATURE RANGE STUDY

PREFACE

The LADOTD Bridge Design and Evaluation Manual (BDEM) has the objective of obtaining uniformity and establishing standard policies and procedures in the preparation of engineering and construction plans for bridge and highway structures in Louisiana. The BDEM shall be followed for all LADOTD projects.

The BDEM is divided into four parts: Part I – Policies and Procedures; Part II – Design Specifications; Part III – Design and Detail Aids; Part IV – Background Information. Part II consists of: Volume 1 – Bridge Design; Volume 2 – Movable Bridge Design; Volume 3 – Structural Supports for Permanent Highway Signs and High Mast Lighting; Volume 4 – Highway Safety; and Volume 5 – Bridge Evaluation/Rating.

BDEM Part I - Policies and Procedures

BDEM Part I documents policies and procedures in Chapters. All references to BDEM Part I carry the prefix "P" followed by a section number. For example, P1.1 refers to Section 1.1 in Chapter 1, P6.2.5 refer to Section 6.2.5 in Chapter 6, etc.

BDEM Part II - Design Provisions

BDEM Part II documents all design related provisions.

For fixed bridges and appurtenant components, provisions of the latest *AASHTO LRFD Bridge Design Specifications* shall govern where applicable, except as specifically modified by the requirements of BDEM Part II – Volume 1.

For movable bridges and appurtenant components, provisions of the latest *AASHTO LRFD Movable Highway Bridge Design Specifications* shall govern where applicable, except as specifically modified by the requirements of BDEM Part II - Volume 2.

For structural supports of permanent signs and high mast lighting, provisions of the latest *AASHTO Standard Specifications for Structural Supports for Highway Signs, Luminaries, and Traffic Signals* shall govern where applicable, except as specifically modified by the requirements of BDEM Part II – Volume 3.

For highway safety, provisions of the latest *AASHTO Roadside Design Guideline* shall govern where applicable, except as specifically modified by the requirements of BDEM Part II – Volume 4.

For bridge evaluation and rating, provisions of the latest *AASHTO The Manual for Bridge Evaluation* shall govern, except as specifically modified by the requirements of BDEM Part II – Volume 5.

All AASHTO publications referenced for each volume above are herein referred to as the “AASHTO Code”. As noted above, the BDEM has precedence over the AASHTO Code and other bridge design and construction standards, should conflict exist. If clear precedence cannot be established, the LADOTD Bridge Design Engineer Administrator shall establish governing specifications. Any deviations from the BDEM require approval of the LADOTD Bridge Design Engineer Administrator. Approved design exceptions shall be noted on the design criteria of the project and contract plans as appropriate.

In Part II, the corresponding AASHTO Code article numbering system is followed in each volume. Within each volume, all references to the corresponding AASHTO code sections, articles, equations, figures or tables carry the prefix “A” and all references to the corresponding AASHTO code

commentary carry the prefix “AC”. When referencing publications other than the corresponding AASHTO code in each volume, the name of the publication and the section or article number will be specified.

All references to BDEM Part II, “Design Specifications”, carry the prefix “D”, and all references to commentary of Part II carry the prefix “DC”. The volume number will be specified when referencing BDEM Part II provisions in different volumes.

When a BDEM PART II article modifies and/or adds information to a corresponding AASHTO code article, the first sentence shall read, “The following shall supplement Ax.x.x”. When a PART II article replaces a corresponding AASHTO code article, the first sentence shall read, “The following shall replace Ax.x.x”.

For tables and figures added in Part II that are not in the AASHTO code, each table and figure will be given a unique name, but without a number. For easy reference, all tables and figures are listed in the Table of Contents for each chapter.

BDEM Part III - Design and Detail Aids

BDEM Part III documents all design and detail aids in Chapters. All references to BDEM Part III carry the prefix "DD" followed by a section number. For example, DD1.1 refers to Section 1.1 in Chapter 1, DD2.2 refers to Section 2.2 in Chapter 2, etc.

BDEM Part IV - Background Information

BDEM Part IV documents the background information for the development of design provisions in Part II in Chapters. All references to BDEM Part IV carry the prefix "B" followed by a section number. For example, B1.1 refers to Section 1.1 in Chapter 1, B2.2 refers to Section 2.2 in Chapter 2, etc.

Maintenance and Updating of BDEM

Maintenance and updating of the BDEM is the responsibility of the LADOTD Bridge Design Section. If a user believes that modifications and/or additions to the BDEM would improve the present design practice, they shall follow the course of action described in BDEM Part I, P2.1.

BDEM REVISION HISTORY

Date	Description	Publication BDTM No.
11/17/2014	Initial Publication of Bridge Design and Evaluation Manual (BDEM)	BDTM.50

PART I

POLICIES AND PROCEDURES

CHAPTER 1 – BRIDGE DESIGN TECHNICAL MEMORANDUM (BDTM)

TABLE OF CONTENTS

1.1—PURPOSE 1
1.2—BDTM DEVELOPMENT PROCESS 1

1.1—PURPOSE

A Bridge Design Technical Memorandum (BDTM) is a communication tool used by the Bridge Design Section to document and disseminate policies, procedures, and updates to the Bridge Design and Evaluation Manual and Bridge Design Standard Plans and Special Details to all bridge designers including in-house staff and consultants.

1.2—BDTM DEVELOPMENT PROCESS

Whenever the need for a BDTM arises, the following procedures shall be followed:

Step 1: Complete the online BDTM Request Form posted on the Bridge Design website. The request will be submitted to the Bridge Design Engineer Administrator and the Assistant Bridge Design Administrator in charge of BDTMs (Assistant).

Step 2: A designated engineer will log the request into the BDTM Log Sheet. The designated engineer will review the request to determine if a BDTM is warranted or if there are alternative methods to address the issue and present his or her recommendation to the Bridge Design Engineer Administrator and the Assistant for their review.

Step 3: If the determination is made that a BDTM is not warranted, the designated engineer will inform the requestor of that decision. The requestor may then request a meeting with the designated engineer and any other relevant individuals to discuss the decision. At that meeting, a final determination shall be made whether or not to continue the BDTM development.

Step 4: If the determination is made that a BDTM is warranted, the designated engineer will develop a draft BDTM.

Step 5: The Assistant will review the draft BDTM.

Step 6: The designated engineer will make any necessary changes, then distribute the draft BDTM for comments via e-mail. The distribution list shall include the following individuals:

- Bridge Design Engineer Administrator
- Assistant Bridge Design Administrators
- Bridge Design Managers
- Specification Committee Members
- Anyone else that may be affected by the BDTM

Step 7: The designated engineer will address all comments and distribute the final draft BDTM for review via e-mail, using the same distribution list from Step 6. This step may be repeated as necessary until all issues have been resolved.

Step 8: The Assistant will obtain an approval signature from the Bridge Design Engineer Administrator.

Step 9: A designated individual will scan the signed BDTM, update the published BDTM index, and post both on the Bridge Design website.

Step 10: The Assistant will notify in-house staff, consultants, and the copied individuals of the new BDTM publication.

Step 11: The designated engineer will update the BDTM Log Sheet.

CHAPTER 2 – BRIDGE DESIGN COMMITTEES

TABLE OF CONTENTS

2.1—BRIDGE DESIGN AND EVALUATION MANUAL (BDEM) COMMITTEE..... 1
2.2—BRIDGE DESIGN SPECIFICATION COMMITTEE..... 1

2.1—BRIDGE DESIGN AND EVALUATION MANUAL (BDEM) COMMITTEE

The BDEM Committee has been established to oversee all updates to the BDEM. The committee members are appointed by the Bridge Design Engineer Administrator and the member roster is posted on the Bridge Design website. The Assistant Bridge Design Administrator in charge of the BDEM serves as the Chair and a senior engineer who is a direct report to the Chair serves as the Vice Chair. Other committee members include the Bridge Design Engineer Administrator and senior engineers from various in-house design groups with expertise in bridge/structural design, bridge evaluation/rating, mechanical design, and electrical design. The responsibilities of the committee members entail reviewing the updates, gathering feedback from their respective design groups, and providing comments and recommendations to the Committee Chair. When the BDEM needs to be revised, the following procedure shall be followed:

- The user shall complete an online *BDEM Proposed Revision Request Form* posted on the bridge section website. The request will be submitted to the Bridge Design Engineer Administrator and the BDEM Committee Chair.
- The Bridge Design Engineer Administrator will review the recommended modification and transmit it to the BDEM Committee Chair (Chair) for processing.
- The Chair will review the recommended modification and send it to the BDEM Committee for review and discussion. The committee will provide the final recommendation for acceptance or rejection to the LADOTD Bridge Design Engineer Administrator for final approval.
- If the proposed modification is accepted, revised and/or additional pages will be distributed through Bridge Design Technical Memorandum (BDTM), with an assigned revision date in the bottom left-hand corner of the page.
- If the proposed modification is not accepted, the LADOTD Bridge Design Engineer Administrator will notify the originator for the reasons of rejection.
- When any AASHTO code is revised, the Chair is responsible for reviewing the AASHTO revisions and recommending required modifications of the BDEM. The same course of action as noted above shall be followed.

2.2—BRIDGE DESIGN SPECIFICATION COMMITTEE

The Bridge Design Specification Committee has been established to oversee all structure-related specifications in Part VIII - Structures of *the Louisiana Standard Specifications for Roads and Bridges* including supplemental specifications, special provisions, standard items, and non-standard items. The committee members are appointed by the Bridge Design Engineer Administrator and the member roster is posted on the Bridge Design website. The Assistant Bridge Design Administrator in charge of the Bridge Program serves as the Chair and a senior engineer who is a direct report to the Chair serves as the Vice Chair. Other committee members include the Bridge Design Engineer Administrator and the Assistant Bridge Design Administrator in charge of the BDEM.

When a need arises for new specifications, such as implementing new material or new products, etc., and/or modifications to the existing specifications in Part VIII – Structures of *the Louisiana Standard Specifications for Roads and Bridges*, the following procedure shall be followed by all designers, including in-house staff from bridge design section, districts, or other sections, and consultants.

Step 1: The requestor shall complete the online *Specification Revision Request Form*, which is posted on the Bridge Design website. The request will be submitted to the Bridge Design Engineer Administrator and the Specification Committee Chair (Chair).

Step 2: The Chair reviews the request and sends it to the Committee for comments.

Step 3: The Chair works with the requestor to address all comments and finalize the specification.

Step 4: The Chair provides the final recommendation to the Bridge Design Engineer Administrator for approval and then submits the request to the Contracts and Specifications Section.

Step 5: The Contracts and Specifications Section prepares the final version and returns it to the Chair for concurrence prior to submitting it to FHWA for review and approval.

Step 6: If necessary, the Contracts and Specifications Section returns the specification to the Chair to incorporate FHWA comments.

Step 7: Once FHWA approval is received, the Contracts and Specifications Section publishes the specification.

CHAPTER 3 – POLICY FOR QC/QA

TABLE OF CONTENTS

3.1—INTRODUCTION 1
3.2—DEFINITIONS OF QC/QA IN BRIDGE DESIGN AND THE QC/QA PROCESS 1
3.2.1—Definitions 1
3.2.2—QC/QA Process 1
3.3—CONSULTANT AND DESIGN-BUILD PROJECTS 4
3.3.1—Responsibilities of the Prime Consultant and Design-Build Contractor 4
3.3.2—Responsibilities of the LADOTD Bridge Task Manager 5
3.4—STANDARDS PLANS AND SPECIAL DETAILS 7
3.5—SOFTWARE 7
APPENDIX A—DESIGN CRITERIA CHECKLIST 8
APPENDIX B—FINAL CALCULATION BOOK CHECKLIST 10
APPENDIX C—QA INFORMATION PACKAGE CHECKLIST 11
APPENDIX D—QC/QA CERTIFICATION 12
APPENDIX E—PEER REVIEW RESOLUTION AGREEMENT 13
APPENDIX F—BRIDGE DESIGN SECTION RECORDS RETENTION POLICY 14
APPENDIX G—EVALUATION INSTRUCTIONS FOR CONSULTANT'S QC/QA PLAN DOCUMENT 17
G.1—Instructions for Grading the QC/QA Plan Document 17
G.2—QC-QA Plan Document Rating Matrix 18
G.3—Grading Sheet for the QC/QA Plan Document 20
APPENDIX H—CONSULTANT PROJECT BRIDGE DESIGN KICK-OFF MEETING AGENDA CHECKLIST 21
APPENDIX I—CONSULTANT SUBMITTAL QC/QA CERTIFICATION 22
APPENDIX J—PROJECT ACTIVITY LOG SHEET 23
APPENDIX K—CONSULTANT SUBMITTAL REVIEW CHECKLIST 24

3.1—INTRODUCTION

This document establishes the minimum requirements for the Quality Control (QC) and Quality Assurance (QA) for all LADOTD bridge design projects (in-house, consultant and design-build projects). This document complies with the "Guidance on QC/QA in Bridge Design In Response to NTSB Recommendation" (FHWA/AASHTO Guidance), which was published jointly by FHWA and AASHTO in August 2011. Any engineer who performs work for the LADOTD Bridge Design Section shall comply with these minimum requirements in addition to any relevant internal QC/QA policy. The QC/QA requirements must be implemented for all design activities in both design phase and construction support phase of the project.

3.2—DEFINITIONS OF QC/QA IN BRIDGE DESIGN AND THE QC/QA PROCESS

3.2.1—Definitions

Quality Control (QC): Procedures of checking the accuracy and consistency of the calculations and the drawings, detecting and correcting design omissions and errors before the design plans are finalized, and verifying the specifications for the load-carrying members are adequate for the service and operation loads.

Quality Assurance (QA): Procedures of reviewing the work to ensure the quality control procedures are in place and effective in preventing mistakes, and consistency in the development of bridge design plans and specifications.

3.2.2—QC/QA Process

Step 1: Selection of a Qualified Design Team

A supervisor or team leader and a design team with qualifications and experiences commensurate with the complexity of the bridges being designed shall first be selected. A supervisor or team leader must be licensed by the State of Louisiana as a professional engineer and must have substantial experience in the design of similar structures. For in-house projects, a supervisor or team leader is assigned by the Bridge Design Engineer Administrator for each project or task and is typically one of the Assistant Bridge Design Administrators or his/her designated engineer.

The supervisor or team leader is responsible for determining the necessary technical knowledge and experience required for the project. Team members responsible for performing various design and detailing activities and QC/QA must be identified by the supervisor or team Leader. On large projects there may be multiple personnel assigned to each role; however, if that is the case, each individual should be assigned a specific and definable portion of the project for which they are responsible.

Step 2: Development of Project Design Criteria

Design criteria specific for each project must be developed and approved by the supervisor or team leader prior to initiating the design process. For consultant projects, the design criteria must be submitted for LADOTD's review and approval. Though the design criteria may change throughout the project, a current list of the criteria shall be maintained at all times. Any design assumptions made or design exemptions obtained shall be listed in the design criteria and referenced in the calculations and drawings as appropriate. A design criteria checklist is included in *Appendix A*.

Step 3: *Development of Designs and Plan Details by the Designer and the Detailer*

The designer is the engineer directly responsible for the development of design calculations, drawings, special provisions including Non-Standard items, and cost estimate. The designer must be licensed by the

State of Louisiana as a professional engineer or certified as an engineer intern. The detailer is the individual directly responsible for the creation of CAD drawings.

During the design process, the designer must follow the design criteria established for the project. Bridge type, size and location (T, S &L) must be developed first and approved by the supervisor or team leader prior to proceeding with the design of structural components. The design calculations shall be organized and maintained in a standard calculation book format. The calculation book checklist is included in *Appendix B*. The designer must communicate with the detailer and supervise the detailing work to ensure that the drawings adequately and accurately present the design information. Both the designer and the detailer shall check their own work and minimize errors.

Step 4: Quality Control (QC) of Designs and Plan Details by the Design Checker and the Detail Checker

The design checker is the engineer responsible for performing a full technical review of the design calculations, drawings, special provisions including Non-Standard items, and cost estimate. The design checker must be licensed by the State of Louisiana a professional engineer or certified as an engineer intern; however, if the designer is an engineer intern, the design checker must be a professional engineer. The detail checker is the individual responsible for performing a full review of the CAD drawings. The detail checker can be a designer or a detailer. The design checker and detail checker shall not be the ones who perform the original design and detailing.

During the design check process, the design checker must verify the accuracy of the designer's calculations, pay items, quantities, special provisions including Non-Standard items, and cost estimate. The design checker may perform a redline check of the designer's calculations or produce an independent set of calculations and compare the results; the supervisor or team leader shall determine which method to use depending on the complexity of the project. Regardless of the checking method employed, the designer's calculations are the calculations of record and must be updated to correct any errors or omissions discovered by the design checker. The calculations of the design checker should also become a part of the calculation of record when independent checking calculations are produced. The design checker should also ensure that the drawings adequately and accurately present the design information.

During the detail check process, the detail checker must ensure the drawings are in accordance with the design information and CAD standards. All dimensions and quantity calculations must be verified.

The checker may begin the checking process at the completion of the entire design/detail process or may check components of the designer/detailer's work as it is completed. Likewise, the checker may provide feedback at the completion of the entire checking process or as each component of check is completed. Any discrepancies that arise should be resolved between the designer/detailer and the checker, and the calculations and plan details should be corrected accordingly. If the designer/detailer and the checker are unable to resolve their discrepancies, the issue should be brought to the attention of the supervisor or team leader.

After the designer, design checker, detailer, and detail checker are satisfied with the state of the design calculations, drawings, special provisions, and cost estimate as appropriate, the design and detail check shall be considered complete. Upon completion of the design and detail check, which shall be no later than the 95% Final Plans stage, the designer is responsible for preparing a QA information package, which includes the documents listed below, and providing the package to the reviewer to perform quality assurance (QA).

- QA information package check list (see *Appendix C*)
- Calculation book
- Plans
- Special provisions including Non-Standard items
- Cost estimate

- Any relevant documents, such as checklists, review comments, etc., utilized by the designer, design checker, detailer, and detail checker

If design revisions are required after the QA information package has been submitted, the reviewer must be notified of such revisions and supplied with the revised information.

Step 5: Quality Assurance (QA) of Designs and Plan Details by the Reviewer

The reviewer is the engineer responsible for ensuring that the QC process as described in Step 4 is complete and the design calculations, drawings, special provisions, and cost estimate are in accordance with LADOTD Bridge Design practices, policies, and procedures. The reviewer must be licensed by the State of Louisiana as a professional engineer and must have substantial experience in the design of similar structures.

During the quality assurance process, the reviewer shall perform a cursory review of all documents in the QA information package submitted by the designer. This review should focus on the constructability of the plan details; areas of critical structural importance; areas where, based on the reviewer's experience, mistakes may be typically found; and areas that may be new to the design practice. The reviewer may, but need not, produce independent calculations to verify submitted information. The reviewer shall provide feedback to the designer and resolve all issues. Upon completion of the QA process, which shall be no later than the 98% final plans stage, the design calculations, plan details, special provisions, and cost estimate shall be considered as final. At this point, the QC/QA certification as included in *Appendix D* shall be signed by the designer, design checker, detailer, detail checker, and reviewer.

Step 6: Peer Review

Peer review should be performed only at the request of the Bridge Design Engineer Administrator for complex projects. The peer review is the process by which an independent engineering entity, with no prior involvement in the project, performs a check of the designs by producing an independent set of calculations based on the drawings or performs the review as specified in the scope of work. In the case of a consultant-designed project, the peer reviewer may not be employed by the same consultant with whom the designer or design checker is employed. Peer reviews are typically performed between 60% to 98% final plans stage depending on the scope of the review. The peer reviewer must be licensed by the State of Louisiana as a professional engineer and must have substantial experience in the design of similar structures. The peer review comments must be submitted to LADOTD and the design team for evaluation. Resolutions agreed upon by all parties including the designer, peer reviewer, and LADOTD shall be incorporated in the final design. A Peer Review Resolution Agreement (see *Appendix E*) must be signed by the peer reviewer, the supervisor or team leader of the design team, and LADOTD Representative.

Step 7: Sealing of Design Calculation Book and Plans by the Engineer of Record (EOR)

The supervisor or team leader shall assign an EOR for the project. The EOR is the engineer responsible for supervision and/or preparation of plans, sealing calculations, plans, and special provisions if required. The EOR must be licensed by the State of Louisiana as a professional engineer and must have commensurate experience in the design of similar structures. The EOR can be the designer, the design checker, the reviewer, or the supervisor/team leader who is directly involved in the project design activities.

The responsibilities of the EOR are as follows:

- Ensure the QC/QA certification is signed by all responsible parties. Ensure the geotechnical design information shown on bridge plans is co-stamped by a Geotechnical Engineer and the hydraulic information shown on bridge plans is co-stamped by a Hydraulic Engineer. If practical, the hydraulic information and geotechnical information should be presented on separate sheets to

reduce the engineering stamps on a sheet. When more than one engineering stamp is required on a sheet, the responsibilities for each engineering stamp shall be clearly defined.

- Assemble design calculations from all designers including the final geotechnical analysis report and the hydraulic report from the geotechnical engineer and the hydraulic engineer, finalize the calculation book, and seal the cover sheet of the calculation book.
- Ensure the names of the designer, design checker, detailer, detail checker, and reviewer are correctly shown on the title block of each plan sheet. Stamp all plan sheets or designate a designer, design checker, or reviewer who shall be licensed by the State of Louisiana as a professional engineer to stamp the sheets developed under their supervision. The EOR must stamp the general notes sheets.
- Ensure all special provisions are accurately shown on the construction proposal. The special provisions are typically stamped by the Specification Engineer as part of the construction proposal; however, if the Specification Engineer is not qualified or not willing to stamp the special provisions, the EOR must stamp these provisions.

Step 8: QC/QA for Design Activities after Final Plans are Signed by Chief Engineer

The same QC/QA process above shall apply to all design activities such as plan revisions, change orders, etc., occurring after the final plans are signed by Chief Engineer.

Step 9: Archiving Bridge Design Files

The EOR is responsible for archiving all bridge design files including calculation books, plans, special provisions, cost estimate, and other pertinent documents in accordance with the Bridge Design Section records retention policy (see *Appendix F*). For consultant projects, the supervisor or the team leader is responsible for delivering all bridge design files to the LADOTD Bridge Task Manger no later than 30 calendar days after the stamped final plans are delivered. Any revisions made to these documents due to plan revisions and change orders must be delivered with the signed plan revisions or change order sheets.

The final calculation book and other final design documents for all projects including in-house and consultant projects shall be uploaded to the archiving location designated in the record retention policy within 30 calendar days after the stamped final plans are delivered.

3.3—CONSULTANT AND DESIGN-BUILD PROJECTS

3.3.1—Responsibilities of the Prime Consultant and Design-Build Contractor

For consultant projects and design-build projects the Prime Consultant or Design-Build Contractor is fully responsible for QC/QA of their work and the work of all subconsultants. The Prime Consultant or Design-Build Contractor is also responsible for all expenses incurred from design omissions, ignorance, or errors.

The Prime Consultant or Design-Build Contractor is required to submit a QC/QA plan document as part of the proposal (SF 24-102) evaluation. Effective Nov. 1, 2012, the following QC/QA statement is included in the advertisement and contract for all Bridge Design projects:

Quality Control and Quality Assurance (QC/QA) for Bridge Design Projects

The Prime Consultant shall submit a QC/QA plan document specifically developed for this project as part of SF 24-102. The QC/QA plan document must comply with the minimum requirements set in the "Guidance on QC/QA in Bridge Design in Response to NTSB Recommendation (H-08-17)"

(FHWA/AASHTO Guidance), which was published by FHWA and AASHTO in August 2011, and LADOTD Bridge Design Section QC/QA policy, issued as a Bridge Design Technical Memorandum No. 37 in October 2012. The FHWA/AASHTO guidance and LADOTD Bridge Design Section QC/QA Policy can be downloaded from the LADOTD Bridge Design Section website. The grading instructions, rating matrix, and grading sheet for the QC/QA plan document are included in Appendix G of the LADOTD Bridge Design Section QC/QA Policy. The QC/QA plan document should be prepared to address all evaluation criteria included in the rating matrix. The QC/QA plan document must be implemented for all bridge design activities in both design phase and construction support phase of the project. The Prime Consultant is fully responsible for QC/QA of their work as well as the work of all sub-consultants. All project submittals must include a QC/QA certification that the submittals meet the requirements of the QC/QA plan document.

The bridge task manager for the project is responsible for evaluating and grading the QC/QA plan document. The grading instructions, evaluation matrix, and grading sheet are included in Appendix G.

3.3.2—Responsibilities of the LADOTD Bridge Task Manager

LADOTD Bridge Task Managers shall not perform QC/QA of consultants' work.

The responsibilities of the LADOTD bridge task manager for a consultant project are as follows:

a. Develop bridge design scope of work, man-hour estimate, minimum personnel requirements, and evaluation criteria, and obtain agreement from the direct supervisor on these items. Provide the information required for the project manager to prepare the advertisement and review the draft advertisement to ensure that all bridge design requirements are included.

b. Serve as a member of the proposal evaluation committee and select the most qualified consultant team. Evaluate SF24-102 and QC/QA plan document in accordance with the policies and procedures established by CCS and the instructions included in *Appendix G.* The final rating for SF24-102 and the QC/QA plan document shall be reviewed by the direct supervisor and the Bridge Design Engineer Administrator. SF24-102 for the selected consultant shall be retained for project duration.

c. Initiate a bridge design kick-off meeting with the consultant as soon as the project is awarded to meet key bridge design team members (supervisor or team leader, designers, design checkers, and reviewers); discuss staffing plan and implementation of QC/QA plan document; determine bridge design submittal schedules; share expectations and consultant rating criteria; discuss bridge design criteria; and discuss bridge design budget, supplemental requests, invoices, and the importance of avoiding claims. Reach an early agreement regarding bridge type, size and location (TS&L). A bridge design kick-off meeting agenda checklist is included in *Appendix H.*

d. Review and approve design criteria and TS&L and ensure the design criteria is updated as the project progresses.

e. Monitor consultant's implementation of the QC/QA plan document. Ensure each consultant submittal includes a QC/QA certification (see *Appendix I*).

f. Keep a project log sheet to record all major project activities such as project meetings, consultant submittals, DOTD review comments, major decisions made, etc. A project log sheet template is included in *Appendix J.*

g. Review consultant's submittals. Selectively check dimensions and details as a cursory review of the plans for constructability, consistency, and clarity but not as QC/QA of consultants' work.

Communicate with consultants any concerns and schedule a face-to-face meeting if required to resolve differences in a timely manner. A consultant submittal review checklist is included in *Appendix K*.

h. Monitor project schedule and ensure on time delivery of project submittals.

i. Monitor budget, process supplemental agreements in a timely manner, and avoid claims. Ensure the consultant performs work with a signed contract in place.

j. Review and approve invoices. Ensure the original staff proposed in SF24-102 is reflected in the invoices. If personnel changes are required, the credentials of replacement staff must be equal to or exceed the qualifications of the original staff. The resumes of replacement staff must be approved by LADOTD.

k. Perform a consultant rating for each major submittal for the quality of work. The major project submittals include, but not limited to, the following items:

- Design Criteria
- Bridge Type, Size and Location (TS&L)
- 30%, 60%, 90%, 100% of Preliminary Plans
- 30%, 60%, 90%, 100% of Final Plans
- Design Calculation Book

Consultant ratings performed by the bridge task managers must be reviewed and approved by their direct supervisor; a copy of the rating must be sent to the Consultant.

l. Archive final bridge design files in accordance with Bridge Design Section record retention policy.

3.4—STANDARDS PLANS AND SPECIAL DETAILS

Standard plans are plans signed by the LADOTD's Chief Engineer and stamped by a LADOTD bridge engineer. Special details are plans stamped by a LADOTD bridge engineer.

All standard plans and special details (hereafter jointly referred to as Standards) shall be developed following the same QC/QA process as described in Section 3.3.2. Refer to BDEM Part I, P9.2 for the standards development process/checklist. The DOTD Bridge Standards Manager shall be responsible for the coordination of creating or updating standard plans and special details that are maintained by the Bridge Design Section. The EOR for each category of the standards is assigned by the Bridge Design Engineer Administrator.

3.5—SOFTWARE

A pre-approved list of software is posted on Bridge Design Section website under QC-QA. If any other software is required for unique applications for which pre-approved software cannot be used, a synopsis of the software shall be submitted to the Bridge Design Engineer Administrator for approval prior to use. The synopsis shall include the name of the software and the developer, a general description of the functions, a certification from the software developer stating that it is maintained in accordance with the latest *AASHTO LRFD Bridge Design Specifications*, and an account of the requester's experience and the experience of other organizations or agencies that use the software. Data/results from in-house software will not be accepted as part of the deliverable.

APPENDIX A—DESIGN CRITERIA CHECKLIST

Design criteria for each project shall include, but not limited to, the following sections:

__ **Cover sheet**

The following information must be included on the cover sheet:

- LADOTD project number
- Project name
- Revision date
- The Supervisor or Team Leader's signature and date

__ **Governing Design and Construction Specifications and Other References**

A list of governing design and construction specifications and other references used for the project shall be included in this section. The edition number, interim revisions, and/or publication date must be specified for each reference.

__ **Design Assumptions and Design Exceptions**

All design assumptions and design exceptions received must be included in this section along with supporting documents.

__ **General Information**

The general information as listed below should be included in this section:

- Bridge information (no. of bridges, bridge clear width, length, no. of lanes, lane width, shoulder width, etc.)
- Road information (roadway classifications, design speed, traffic data, etc.)
- Vertical datum
- Vertical and horizontal clearances
- Other relevant information

__ **Hydraulic Design Criteria**

All hydraulic design criteria (design year, design water elevations, scour depth and scour elevation, etc.) shall be included in this section and the information shall be provided by the Hydraulic Engineer.

__ **Design Factors**

The ductility factor η_D, redundancy factor η_R, and operational importance factor η_I shall be listed in this section.

__ **Design Loads**

All design loads (dead load, live load, wind load, thermal loads, vessel collision loads, seismic load, wave loads, etc.) used for the project shall be included in this section.

__ **Limit States**

All applicable limit states for this project shall be listed in this section.

__ **Bridge Barrier**

The design criteria, types, and test levels for bridge barriers shall be listed in this section. Standard plans and special details should be listed if they are utilized.

__ **Guardrail**

The design criteria, types, and test levels for guardrails shall be listed in this section. Standard plans and special details should be listed if they are utilized.

__ **Approach Slab**

Design criteria for approach slab shall be included in this section. Standard plans and special details should be listed if they are utilized.

__ **Deck and Deck Drainage**

All design criteria for deck and deck drainage design shall be included in this section. Standard plans and special details should be listed if they are utilized.

__ **Bearing**

All bearing types and design criteria for each bearing type shall be included in this section. Standard plans and special details should be listed if they are utilized.

__ **Joint**

All joint types and design criteria for each type shall be included in this section. Standard plans and special details should be listed if they are utilized.

__ **Superstructure**

All superstructure types and design criteria for each type shall be included in this section. Standard plans and special details should be listed if they are utilized.

__ **Substructure**

All substructure types and design criteria for each type shall be included in this section. Standard plans and special details should be listed if they are utilized.

__ **Piles and Drilled Shafts**

All pile types, sizes, and structural design criteria shall be included in this section. Standard plans and special details should be listed if they are utilized.

__ **Geotechnical Design**

All geotechnical design criteria shall be included in this section and the information shall be provided by the Geotechnical Engineer. Standard plans and special details should be listed if they are utilized.

__ **Mechanical Design**

All mechanical design criteria shall be included in this section if applicable. Standard plans and special details should be listed if they are utilized.

__ **Electrical/Lighting Design**

All electrical design criteria shall be included in this section if applicable. Standard plans and special details should be listed if they are utilized.

__ **As-Designed Bridge Rating Criteria**

All as-designed bridge rating criteria shall be included in this section.

__ **Software**

All software used for design and check shall be included in this section.

APPENDIX B—FINAL CALCULATION BOOK CHECKLIST

The final calculation book for each project shall include, but not limited to, the following sections:

__ **Cover Sheet**

The following information must be included on the cover sheet:

- LADOTD project number
- Project name
- The title of "Final Calculation Book"
- The EOR's seal with signature and date

__ **Final Calculation Book Check List**

__ **QC/QA Certifications**

__ **Peer Review Resolution Agreement (if peer review is performed)**

__ **Design Criteria**

__ **Final Hydraulic Analysis Report from Hydraulic Engineer**

__ **Final Geotechnical Analysis Report from Geotechnical Engineer**

__ **Superstructure Design Calculations**

__ **Substructure Design Calculations**

__ **Quantity Calculations**

__ **Special Provisions/NS-Items**

__ **Construction Cost Estimate**

__ **As-Designed Rating Report**

__ **List of All Final Electronic Design Files and File Locations (ProjectWise directory name)**

Consultants shall submit the final calculation book to LADOTD bridge task managers; the submittal shall be on a CD or Flash Drive or placed to a designated ProjectWise folder including the following information:

__ **A PDF File of the Calculation Book (Including the As-Designed Rating Report)**

__ **All Electronic Design Files**

__ **A PDF File of the As-Designed Rating Report Only**

The final calculation book for in-house projects shall include the same files listed above for consultant projects. The final calculation book and other final design documents for all projects including in-house and consultant projects shall be uploaded to the archiving location designated in the record retention policy within 30 calendar days after the stamped final plans are delivered.

APPENDIX C—QA INFORMATION PACKAGE CHECKLIST

Project No.:
Project Description:

_____ Calculation Book

_____ Plans

_____ Special Provisions

_____ Cost Estimate

_____ Other Documents _____

APPENDIX D—QC/QA CERTIFICATION

Project No.:

Project Name:

We, the undersigned designers, detailers, checkers and reviewers for this project, have reviewed and accepted the calculations, plans, quantities, special provisions, and cost estimate prepared for the project. We certify that the work for which we are responsible has been completed in accordance with the LADOTD Bridge Design Section policy on QC/QA.

Team Members	**Name**	**PE Registration No.**	**Responsible Plan Sheets**	**Responsible Special Provisions**	**Construction Cost Estimate**	**Signature**
Designers						
Design Checkers						
Detailers						
Detail Checkers						
Reviewers						
Peer Reviewer						
Geotechnical Engineer						
Hydraulic Engineer						
EOR						

APPENDIX E—PEER REVIEW RESOLUTION AGREEMENT

Project No.:

Project Name:

We, the undersigned Peer Reviewer, Supervisor or Team Leader of the design team, and LADOTD Representative for this project, have reviewed and accepted the attached peer review resolutions. We certify that the peer review has been performed in accordance with the LADOTD Bridge Design Section policy on QC/QA.

Team Members	Name	Signature
Peer Reviewer		
Supervisor or Team Leader		
LADOTD Representative		

APPENDIX F—BRIDGE DESIGN SECTION RECORDS RETENTION POLICY

Item No.	Record Title	In Office Retention Period (by Bridge Design Section)	DOTD Total Retention (by General Files)	Archiving Instruction	Responsible Party
001	Design Manuals/Guidance and Bridge Design Technical Memoranda	ACT* + 1 CY**	Life of the Agency	Archive electronically in Project-wise under Documents_Reference Materials\Bridge Design Section Archive\Design Manuals-Guidance	Assistant Bridge Design Administrator responsible for design manuals
002	Bridge Design Standard Plans and Special Details	ACT* + 1 CY**	Life of the Agency	Archive electronically in Project-wise under Documents_Standard Drawings	Bridge Design Standards Manager
003	Final Plans, Revisions, and Change Orders (CAD files)	ACT* + 1 CY**	Life of the Agency	Archive electronically in Project-wise under Project folder\Bridge-Facilities\Discipline\Plans *(Subfolders for each revision and change order should be created under Plans)*	Bridge Task Managers
004	Final Plans, Revisions, and Change Orders (Original signed hard copies)	ACT* + 1 CY**	Final Project Acceptance Date + 5 Years	Transmit to General Files and archive electronically in DOTD Network Plan Room by General Files	Bridge Task Managers
005	Final Plans, Revisions, and Change Orders (Digital signed copies in pdf format, to be implemented)	ACT* + 1 CY**	Life of the Agency	Archive electronically in Project-wise under Project folder_Published Submittals\Project Drawings_Final Plans	Bridge Task Managers
006	Shop Drawings , Erection Drawings, RFIs, and Other Construction Submittals (Final Distribution Copy in pdf format)	ACT* + 1 CY**	Life of the Agency	Archive electronically in Project-wise under Project folder_Published Submittals\Project Drawings\Construction Submittals\Shop Drawings or Erection Drawings or RFIs or Other Construction Submittals *(See BDTM.49 for instructions)*	Bridge Task Managers

*ACT = End of activity or final project acceptance date for project related items

**CY = Calendar Year

APPENDIX F—BRIDGE DESIGN SECTION RECORDS RETENTION POLICY (CONTINUED)

Item No.	Record Title	In Office Retention Period (by Bridge Design Section)	DOTD Total Retention (by General Files)	Archiving Instruction	Responsible Party
007	Shop Drawings (Final distribution hard copies and pdf files)	ACT* + 1 CY**	Life of the Agency	Transmit to General Files and archive electronically in DOTD Network Plan Room by General Files (See BDTM.49 for instructions)	Bridge Task Managers
008	Final Design Calculation Files for In-House and Consultant Projects (Stamped calculation book in pdf format, stamped final reports, and final electronic design models)	ACT* + 1 CY**	Life of the Agency	Archive electronically in Project-wise under Project Folder\ _Published Submittals\Project Documents\Final Design Calculations & Reports	Bridge Task Managers
009	Bridge Rating Reports	ACT* + 1 CY**	Life of the Agency	Archive electronically in Content Manager under Load Rating.	Bridge Rating Engineer
010	Truck Permits Calculations	ACT* + 1 CY**	Life of the Agency	Archive electronically in a designated folder on the Bridge Design server.	Bridge Rating Engineer
011	Chief Engineer Orders (Bridge Posting)	ACT* + 1 CY**	Life of the Agency	Archive electronically in Content Manager under Chief Engineer Orders.	Bridge Rating Engineer
012	Project Related Correspondences (Original Hard Copies)	ACT* + 1 CY**	Final Project Acceptance Date + 5 Years	Archive electronically in Content Manager under Design Projects. At the end of in office retention period, the hard copies shall be boxed, marked with project number and record item No. with description, and then transmitted to General Files for their handling.	Project Managers/Bridge Task Managers

*ACT = End of activity or final project acceptance date for project related items

**CY = Calendar Year

APPENDIX F—BRIDGE DESIGN SECTION RECORDS RETENTION POLICY (CONTINUED)

Item No.	Record Title	In Office Retention Period (by Bridge Design Section)	DOTD Total Retention (by General Files)	Archiving Instruction	Responsible Party
013	Project Related Correspondences (Emails) *(Note: If the email is considered as important project correspondence and needs to be kept for the life of agency, then the email should be printed and treated as item 012.)*	ACT* + 1 CY**	Final Project Acceptance Date + 5 Years	Archive electronically in Project-wise under Project Folder\ _Published Submittals\Project Documents\Project Correspondence Emails	Project Managers/Bridge Task Managers
014	Administrative or Other Types of Correspondences	ACT* + 1 CY**	Life of the Agency	Archive electronically in Content Manager under Bridge Design Subject Files	Everyone

*ACT = End of activity or final project acceptance date for project related items

**CY = Calendar Year

APPENDIX G—EVALUATION INSTRUCTIONS FOR CONSULTANT'S QC/QA PLAN DOCUMENT

G.1—Instructions for Grading the QC/QA Plan Document

The Bridge Task Manager for the project is responsible for evaluating the QC/QA plan document in accordance with the QC/QA plan document rating matrix (G.2) and completing the grading sheet (G.3). A score shall be given for each of the six evaluation criteria (A-F). An average score of the six evaluation criteria will be calculated. If the average score is above or equal to 3.5, an overall rating of "Excellent" shall be given. If the average score is above or equal to 3 and below 3.5, an overall rating of "Good" shall be given. If the average score is above or equal to 2.0 and below 3, the overall rating of "Acceptable" shall be given. If the average score is below 2.0, the overall rating of "Not Acceptable" shall be given. If an overall rating of "Not Acceptable" is given, justifications must be provided. The grading sheet shall be filled out by the Bridge Task Manager and signed by both the bridge task manager and his or her direct supervisor. The grading sheet for the QC/QA plan document, along with justifications when required, must be transmitted to the Project Manager in writing through a transmittal letter. The overall rating for the QC/QA plan document for each consultant team will be presented to the Secretary in addition to the shortlist.

Prior to performing the evaluation, the Bridge Task Manager must review the FHWA/AASHTO "Guidance on QC/QA in Bridge Design In Response to NTSB Recommendations (H-08-17)" and LADOTD Bridge Design Section QC/QA policies, which are the references for the Consultant to develop their QC/QA plan document. These documents can be downloaded from the DOTD Bridge Design website.

G.2—QC-QA Plan Document Rating Matrix

Evaluation Criteria	QC/QA Plan Document Rating Matrix			
	4 - Excellent	**3 - Good**	**2 -Acceptable**	**1- Not Acceptable**
A. Understanding of Consultant's and DOTD's role in QC/QA of Consultant's work	Demonstrate clear understanding that the Consultant is fully responsible for QC/QA of their work and DOTD is not responsible for performing QC/QA of consultant's work.	Demonstrate good understanding that the Consultant is fully responsible for QC/QA of their work and DOTD is not responsible for performing QC/QA of consultant's work.	Demonstrate basic understanding that the Consultant is fully responsible for QC/QA of their work and DOTD is not responsible for performing QC/QA of consultant's work.	Demonstrate poor understanding that the Consultant is fully responsible for QC/QA of their work and DOTD is not responsible for performing QC/QA of consultant's work.
B. Understanding of the QC/QA concepts in Bridge Design	Demonstrate clear understanding of QC/QA concepts in bridge design. Definitions of QC/QA are clearly defined.	Demonstrate good understanding of QC/QA concepts in bridge design. Definitions of QC/QA are clearly defined.	Demonstrate basic understanding of QC/QA concepts in bridge design. The definitions of QC/QA are defined.	Demonstrate poor understanding of QC/QA concepts in bridge design. The definitions of QC/QA are not clearly defined.
C. Responsibilities of Designer, Checker, Reviewer, and Engineer of Record	Responsibilities of Designer, Checkers, Reviewer, and Engineer of Record are clearly defined.	Responsibilities of Designer, Checker, Reviewer, and Engineer of Record are well defined.	Responsibilities of Designer, Checker, Reviewer, and Engineer of Record are defined.	Responsibilities of Designer, Checker, Reviewer, and Engineer of Record are not clearly defined.
D. Description of the QC and QA processes and its effectiveness to ensure the accuracy of the design and the plan details	QC/QA processes are clearly described and should be very effective to ensure the accuracy of the design and the plan details.	QC/QA processes are clearly described and should be effective to ensure the accuracy of the design and plan details.	QC/QA processes are described and should be effective to ensure the accuracy of the design and the construction plan details.	QC/QA processes are not clearly described and do not seems to be effective to ensure the accuracy of the design and the construction plan details.

G.2—QC-QA Plan Document Rating Matrix (Continued)

Evaluation Criteria	QC/QA Plan Document Rating Matrix			
	4 - Excellent	**3 - Good**	**2 -Acceptable**	**1- Not Acceptable**
E. Identification of personnel qualified to perform the bridge design and QC/QA of the design and plan details	The designers and QC/QA personnel are clearly indentified and are exceedingly qualified to perform the work.	The designers and QC/QA personnel are clearly indentified and are qualified to perform the work.	The designers and QC/QA personnel are indentified and are qualified to perform the work.	The designers and QC/QA personnel are not clearly indentified or not identified and the qualifications of the personnel identified are questionable.
F. Use of QC/QA tools, such as Checklists, Standard Forms, Training materials, etc.	QC/QA tools, such as checklists, standard forms, training materials, etc., have been developed and well documented. These tools are well suited for the scope and the complexity of the project.	QC/QA tools, such as checklists, standard forms, training materials, etc., have been developed and documented. These tools are suitable for the scope and the complexity of the project.	QC/QA tools, such as checklists, standard forms, training materials, etc., have been developed and are acceptable to be used for this project.	QC/QA tools, such as checklists, standard forms, training materials, etc., have not been developed or the developed ones are not suitable for this project.

G.3—Grading Sheet for the QC/QA Plan Document

Project No.:

Project description:

Prime Consultant	Evaluation Criteria	Score	Overall Rating	Justifications/Comments
Consultant 1	A			
	B			
	C			
	D			
	E			
	F			
	Average			
Consultant 2	A			
	B			
	C			
	D			
	E			
	F			
	Average			
Consultant 3	A			
	B			
	C			
	D			
	E			
	F			
	Average			
Consultant 4	A			
	B			
	C			
	D			
	E			
	F			
	Average			
Consultant 5	A			
	B			
	C			
	D			
	E			
	F			
	Average			

Prepared by: _____ _____ _____
Name Signature Date

Approved by: _____ _____ _____
Name Signature Date

APPENDIX H—CONSULTANT PROJECT BRIDGE DESIGN KICK-OFF MEETING AGENDA CHECKLIST

A kick-off meeting with the Consultant's bridge design team shall be initiated by the LADOTD Bridge Design Task Manager once the project is awarded. The meeting agenda shall include, but not be limited to, the following items:

__ Introduce LADOTD Bridge Task Manager and the Consultant's Key Team Members (The Supervisor or Team Leader and Key Designers/Design Checkers/Reviewers)

__ Discuss Consultant's Staffing Plan and Implementation of QC/QA Plan Document
(The staffing plan should include names and responsibilities of the designers, detailers, checkers, reviewers, and the EOR.)

__ Determine Schedules for Project Submittals
(Design Criteria, TS & L, 30%, 60%, 90%, 100% of Preliminary Plans and Final Plans, Final Calculations, etc.)

__ Share Expectations and Consultant Rating Criteria
(Consultant rating will be performed for all project submittals shown on the project submittal schedule.)

__ Discuss Design Criteria

__ Discuss Budget, Supplemental Requests, Invoices, and Importance of Avoiding Claims (Staff shown on invoices will be reviewed in accordance with the staffing plan.)

APPENDIX I—CONSULTANT SUBMITTAL QC/QA CERTIFICATION

Project No.:

Project Name:

I, the undersigned Supervisor or Team Leader for this project, certify that the information included in this submittal has been prepared in accordance with the QC/QA plan documents and LADOTD Bridge Design Section policy on QC/QA and the information presented is accurate and meets the requirements of this submittal. All CAD drawings meet LADOTD CAD standards.

_____

Submittal Description

_____	_____	_____
Supervisor or Team Leader Name	Signature	Date

APPENDIX J—PROJECT ACTIVITY LOG SHEET

Project No.:

Project Name:

Bridge Task Manager:

Date	Project Activity	Comments

APPENDIX K—CONSULTANT SUBMITTAL REVIEW CHECKLIST

Items	Submittals												
	Design Criteria	**TS&L**	**30% PP**	**60% PP**	**90% PP**	**100% PP**	**30% FP**	**60% FP**	**90% FP**	**100% FP**	**Final Calculation Book**	**Plan Revisions**	**Change Orders**
Consultant Submittal QC/QA Certification			R	R	R	R	R	R	R	R	R	R	R
Design Criteria	C												
TS&L		C											
Bridge Index			D	D	D	D	D	D	C	S			
General Notes			D	D	D	D	D	D	C	S			
Summary of Estimated Quantities			D	D	C	C	D	D	C	S			
General Plans			D	D	C	C	C	C	C	S			
Typical Sections			D	D	C	C							
Superelevation Diagram				D	D	C	C	C	C	S			
Construction Phasing Details				D	D	C	C	C	C	S			
Traffic Controls Details				D	D	C	C	C	C	S			
Foundation/Pile Layout				D	D	C	C	C	C	S			
Pile Loads/Details					D	D	D	C	C	S			
Pile Data Tables							D	D	C	S			
Bent Details							D	D	C	S			
Fender Details							D	D	C	S			
Girder Details							D	D	C	S			
Span Details							D	D	C	S			
Joint Details								D	C	S			
Bearing Details								D	C	S			
Approach Slab								D	C	S			
Guardrail Details								D	C	S			
Bridge Barrier/Railing Details								D	C	S			
Bridge Drainage Details								D	C	S			
Detour Bridge Details								D	C	S			
Revetment Details								D	C	S			
Signing/Lighting Details								D	C	S			
Year Plate								D	C	S			
Rebar Support								D	C	S			
Misc. Details								D	C	S			
Project Specific Standard Plans and Special Details								D	C	S			
Electrical/Lighting Details								D	C	S			
Mechanical Details								D	C	S			
As-Built Plans								D	C	C			
Special Provisions/NS-Items							D	D	C	C			
Cost Estimate					D	D	D	D	C	C			
Final Calculations											S		
Revised Plans/Calculations												S	S

Legends:
"R" = The item is required and shall be included in the submittal.
"C" = The item shall be complete and shall be included in the submittal.
"D" = The item shall be in development and shall be included in the submittal.
"S" = The item is stamped by the EOR and shall be included in the submittal.

CHAPTER 4 – HIGHWAY BRIDGE PROGRAM AND LIGHTING PROGRAM

TABLE OF CONTENTS

4.1— HIGHWAY BRIDGE PROGRAM 1
4.1.1— Introduction 1
4.1.2— Definitions and Acronyms 1
4.1.3— Program History (Pre MAP-21) 2
4.1.4— Current Legislation (MAP-21) 3
4.1.4.1— Highlights of MAP-21 3
4.1.4.2— Performance Management 3
4.1.4.3— Accelerating Project Delivery 4
4.1.4.4— Primary Bridge Programs 4
4.1.4.4.1— National Highway Performance Program (NHPP) 4
4.1.4.4.2— Surface Transportation Program (STP) 5
4.1.5—Project Selection Process 6
4.1.5.1—Bridge Preservation (On System) & Bridge Preventive Maintenance Programs 6
4.1.5.2—Bridge Preservation (Off-System) Program 7
4.1.5.3—Louisiana Local Public Agency (LPA) 8
4.1.6—Highway Program Development Timeline 9
4.1.7—Preliminary Stage 0 Feasibility Studies for Bridge Projects 9
4.1.8—Parametric Cost Estimation Guidelines 10
4.2—INTERSTATE LIGHTING PROGRAM AND LIGHTING PERMITS ON STATE HIGHWAYS 11
APPENDIX A—PRESERVATION BRIDGE (ON SYSTEM) STAGE 0 STRUCTURAL SITE SURVEY 12
APPENDIX B—BRIDGE PREVENTIVE MAINTENANCE PROGRAM (ON-SYSTEM) STAGE 0 STRUCTURAL SITE SURVEY 22
APPENDIX C—STAGE 0 PARAMETRIC COST ESTIMATE WORKSHEET 28
APPENDIX D—PARAMETRIC COST ESTIMATION GUIDELINES 31
APPENDIX F—EXAMPLE STAGE 0 REPORT 41

LIST OF TABLES

Table D.1-1: Proposed Bridge Length....31
Table D.1-2: Prestressed Girder Span Sizing Lengths....31
Table D.1-3: Proposed Bridge Width....31
Table D.2-1: Bridge Cost Estimate (Includes Super and Sub Structures) Based On Main Bridge Items (FHWA)....32
Table D.2-2: Main Span Structural Units of Movable Bridges....33
Table D.2-3: Other Bridge Items....34
Table D.2-4: Estimated Cost of Removal....35
Table D.2-5: Construction Haul Road and Bridge....36
Table D.2-6: Road Items....36
Table D.2-7: Maintenance of Traffic Items....37
Table D.2-8: Additional Cost Information....38
Table D.3-1: Preventive Maintenance Cost....40

LIST OF FIGURES

Figure D.2-1: Cost of Noise Barrier by Quantity....38
Figure D.2-2: Cost of Noise Barrier by Wall Height....39

4.1— HIGHWAY BRIDGE PROGRAM

4.1.1— Introduction

The Highway Bridge Program is an important part of DOTD regular program under category of Preservation. The Highway Bridge Program is composed of three bridge programs, the Preservation Bridge (On System), Preservation Bridge Preventive Maintenance, and Preservation Parish (Off System) Bridges. All three programs provide an essential management of federal funds for the repair (including scour repair), rehabilitation, preventive maintenance and replacement of deficient bridges.

In addition to the Highway Bridge Program, repair, rehabilitation, preventive maintenance, and replacement of bridges may also be funded by DOTD regular program under the categories of Capacity, Safety, Operations, Miscellaneous or Reimbursable. For reimbursable projects, federal funds may be required and should be set up when directed by the Program Managers.

Other bridge maintenance activities are performed by in house forces through Bridge Maintenance Section and districts. Such activities include structural repairs and smaller bridge rehabilitation and replacement projects.

4.1.2— Definitions and Acronyms

Bridge Preservation (On System) Program Manager: Program Manager in Bridge Design Section for the Highway Bridge Program overseeing the Preservation Bridge (On System) programming structures for repair, rehabilitation and replacement. Structures under this program must be on the state system or on the National Highway System.

Bridge Preservation Preventive Maintenance Program Manager: Program Manager in Bridge Design Section for the Preservation Bridge Preventive Maintenance Program overseeing the selection and programming of structures for a defined set of preventive maintenance activities such as cleaning and painting, joint replacement, bearing replacement, concrete patching, deck treatments, etc. Structures under this program must be on the state system or on the National Highway System.

Bridge Preservation (Off System) Program Manager: Program Manager in Bridge Design Section for the Preservation Parish (Off System) Bridge Program overseeing the selection and programming of structures for rehabilitation and replacement. Structures under this program must be off the state system.

Bridge Scour Program Manager: Program Manager in Bridge Design Section for the Bridge Scour Program overseeing the selection and programming of structures to be included in Phase III Scour Structural Stability Analysis and providing recommendations of Phase IV Scour Remediation Projects to Program Managers for Bridge Preservation (On-System) Program and Bridge Preservation and Preventive Maintenance Program.

CFR: Code of Federal Regulation.

Functionally Obsolete (FO): A bridge that was built to standards that do not meet the minimum federal clearance requirements for a new bridge. These bridges are not automatically rated as structurally deficient, nor are they inherently unsafe.

HBP: Highway Bridge Program initiated by Federal Highway Act in 1970.

HBRRP: Highway Bridge Replacement and Rehabilitation Program established by the Surface Transportation Assistance Act in 1978.

Highway Program: A LADOTD program provided to the Louisiana Legislature identifying construction to be commenced in the ensuing fiscal year, which is based upon anticipated revenues to be appropriated by the Legislature. The program also identifies projects in the current fiscal year to be let and projects which are in various stages of planning and preparation.

Historic Bridge: Any bridge that is listed on, or eligible for listing on, the National Register of Historic Places. For specific information on Louisiana Historic Bridge Inventory, visit LADOTD website under MyDOTD/All DOTD Projects.

ISTEA: Intermodal Surface Transportation and Equity Act of 1991.

MAP-21: Moving Ahead for Progress in the 21st Century Act signed by President Obama on July 6, 2012.

NBI: A database, compiled by the Federal Highway Administration, with information on all bridges and tunnels in the United States that have roads passing above or below.

NBI Sufficiency Rating: An overall rating of a bridge's fitness for the duty that it performs based on factors derived from over 20 NBI data fields, including fields that describe its Structural Evaluation, Functional Obsolescence, and its essentiality to the public. A low Sufficiency Rating may be due to structural defects, narrow lanes, low vertical clearance, or any of many possible issues.

NBIS: National Bridge Inspection Standards.

NHS: National Highway System.

Road Show: A series of public hearings conducted by LADOTD to discuss the upcoming Highway Program for next state fiscal year.

SAFETEA-LU: The Safe, Accountable, Flexible, Efficient, Transportation Equity Act of 1987.

Structurally Deficient (SD): Bridges are classified as “structurally deficient” if they have a general NBI conditional rating for the deck, superstructure, substructure or culvert as 4 or less or if the road approaches regularly overtop due to flooding. The fact that a bridge is structurally deficient does not imply that it is unsafe.

4.1.3— Program History (Pre MAP-21)

The Highway Bridge Program provides funding to enable states to improve the condition of their highway bridges through replacement, rehabilitation, and systematic preventive maintenance. Funding is through the collection of fuel taxes by the Federal Government under the Highway Trust Fund and return funding to the states through programs with federal oversight.

The Highway Bridge Program was initiated after the collapse of the Silver Bridge between West Virginia and Ohio over the Ohio River during rush hour, resulting in the tragic death of 46 people. The Federal Highway Act of 1970 initiated the Highway Bridge Program and established the NBIS and funds were set aside for the replacement of deficient bridges on the Federal Aid Highway System.

The Surface Transportation Assistance Act of 1978 established the HBRRP and included Off-System Bridge eligibility. It mandated between 15% - 35% of the funding be for Off-System Bridges. It also allowed for eligibility of rehabilitation work.

The Highway Improvement Act of 1982, the Surface Transportation and Uniform Relocation Assistance Act of 1987, Intermodal Surface Transportation Efficiency Act of 1991 (ISTEA), and the Transportation Equity Act for the 21st Century (TEA-21) of 1998 followed the efforts of the HBRRP.

The Safe, Accountable, Flexible, Efficient Transportation Equity Act of 2005 (SAFETEA-LU) renamed the HBRRP to the Highway Bridge Program (HBP), and removed the 35% limit for Off System projects.

Prior to MAP-21, in order for structures to qualify for funding, bridges had to be classified as Structurally Deficient or Functionally Obsolete and have an NBI Sufficiency Rating of 50 or less for replacement or 80 or less for rehabilitation. For total replacement, a nominal amount of approach work sufficient to connect the new facility to existing roadway or to attainable touchdown points, in accordance with good design practices, was also eligible for funding. For rehabilitation, the costs to restore the structural integrity of the bridge, as well as to correct major safety defects were eligible.

Whether a bridge was replaced or rehabilitated, the structural and functional deficiencies should have been addressed. Once a structure was worked on, it became ineligible for HBP funds for a 10 year period.

Before MAP-21 came into effect, the controlling legislation was 23 USC Section 144 and 23 CFR Part 650 D.

4.1.4— Current Legislation (MAP-21)

MAP-21 Legislation of 2012 creates a performance-based and multi-modal program to strengthen the U.S. transportation system. By focusing on national goals, increasing accountability, and improving transparency, these changes will improve decision-making through better informed planning and programming.

For specific detail of the legislation refer to the web site at http://www.fhwa.dot.gov/map21/.

4.1.4.1— Highlights of MAP-21

MAP-21 restructures core highway formula programs. Activities carried out under some existing formula programs – the National Highway System Program, the Interstate Maintenance Program, the Highway Bridge Program, and the Appalachian Development Highway System Program – are incorporated into the following new core formula program structure:

MAP-21	Previous Law
National Highway Performance Program (NHPP)	NHS, IM, & Bridge (portion)
Surface Transportation Program (STP)	STP & Bridge (portion)
Congestion Mitigation and Air Quality Improvement Program (CMAQ)	CMAQ
Highway Safety Improvement Program (HSIP)	HSIP (incl. High Risk Rural Roads)
Railway-Highway Crossings (set-aside from HSIP)	Railway Highway Grade Crossing
Metropolitan Planning	Metropolitan Planning
Transportation Alternatives (set aside from NHPP, STP, HSIP, CMAQ, and Metro Planning)	TE, Recreational Trails, and Safe Routes to School

4.1.4.2— Performance Management

The cornerstone of MAP-21's highway program transformation is the transition to a performance and outcome-based program. States will invest resources in projects to achieve individual targets that collectively will make progress toward national goals. MAP-21 establishes national performance goals for Federal highway programs:

- **Safety**—to achieve a significant reduction in traffic fatalities and serious injuries on all public roads.
- **Infrastructure condition**—to maintain the highway infrastructure asset system in a state of good repair.
- **Congestion reduction**—to achieve a significant reduction in congestion on the NHS.

- **System reliability**—to improve the efficiency of the surface transportation system.
- **Freight movement and economic vitality**—to improve the national freight network, strengthen the ability of rural communities to access national and international trade markets, and support regional economic development.
- **Environmental sustainability**—to enhance the performance of the transportation system while protecting and enhancing the natural environment.
- **Reduced project delivery delays**—to reduce project costs, promote jobs and the economy, and expedite the movement of people and goods by accelerating project completion through eliminating delays in the project development and delivery process, reducing regulatory burdens, and improving agencies' work practices.

4.1.4.3— Accelerating Project Delivery

MAP-21 provides an array of provisions designed to increase innovation and improve efficiency, effectiveness, and accountability in the planning, design, engineering, construction, and financing of transportation projects. Building on FHWA's "Every Day Counts" initiative, MAP-21 changes will speed up the project delivery process, saving time and money for individuals and businesses, and yielding broad benefits nationwide.

Some MAP-21 provisions are designed to improve efficiency in project delivery, broadening the ability for states to acquire or preserve right-of-way for a transportation facility prior to completion of the review process required under the National Environmental Policy Act of 1969 (NEPA), providing for a demonstration program to streamline the relocation process by permitting a lump sum payment for the acquisition and relocation if elected by the displaced person, enhancing contracting efficiencies, and encouraging the use of innovative technologies and practices. Other changes target the environmental review process, providing for earlier coordination, greater linkage between the planning and environmental review processes, using a programmatic approach where possible, and consolidating environmental documents. MAP-21 establishes a framework for setting deadlines for decision making in the environmental review process, with a process for issue resolution and referral, and penalties for agencies that fail to make a decision. Projects stalled in the environmental review process can get technical assistance to speed completion within four years.

One area in particular that MAP-21 focuses on to speed up project delivery is expanded authority for use of categorical exclusions (CEs). "Categorical exclusion" describes a category of actions that do not typically result in individual or cumulative significant environmental impacts. CEs, when appropriate, allow federal agencies to expedite the environmental review process for proposals that typically do not require more resource-intensive Environmental Assessments (EAs) or Environmental Impact Statements (EISs). In addition to those currently allowed, MAP-21 expands the usage of CEs to a variety of other types of projects, including multi-modal projects, projects to repair roads damaged in a declared disaster, projects within existing operational right-of-way, and projects receiving limited federal assistance. To assess the impact of the above changes, the Secretary of U.S. Department of Transportation (The Secretary) will compare completion times of CEs, EAs and EISs before and after implementation.

4.1.4.4— Primary Bridge Programs

4.1.4.4.1— National Highway Performance Program (NHPP)

Under MAP-21, the enhanced National Highway System (NHS) is composed of approximately 220,000 miles of rural and urban roads serving major population centers, international border crossings, intermodal transportation facilities, and major travel destinations. It includes the Interstate System, all principal arterials (including some not previously designated as part of the NHS) and border crossings on

those routes, highways that provide motor vehicle access between the NHS and major intermodal transportation facilities, and the network of highways important to U.S. strategic defense (STRAHNET) and its connectors to major military installations.

The NHPP program is authorized to support the condition and performance of the NHS, for the construction of new facilities on the NHS, and to ensure that investments of Federal-aid funds in highway construction are directed to support progress toward the achievement of performance targets established in an asset management plan of a state for the NHS.

MAP-21 establishes a performance basis for maintaining and improving the NHS.

- States are required to develop a risk and performance-based asset management plan for the NHS to improve or preserve asset condition and system performance; plan development process must be reviewed and recertified at least every four years. The penalty for failure to implement this requirement is a reduced federal share for NHPP projects in that year (65 percent instead of the usual 80 percent).
- The Secretary will establish performance measures for Interstate and NHS pavements, NHS bridge conditions, and Interstate and NHS system performance. States will establish targets for these measures, to be periodically updated.
- MAP-21 also requires minimum standards for conditions of Interstate pavements and NHS bridges by requiring states to devote resources to improve the conditions until the established minimum is exceeded. The Secretary will establish the minimum standard for Interstate pavement conditions, which may vary by geographic region. If Interstate conditions in a state fall below the minimum set by the Secretary, the state must devote resources (a specified portion of NHPP and STP funds) to improve conditions. MAP-21 establishes the minimum standard for NHS bridge conditions – if more than 10 percent of the total deck area of NHS bridges in a state is on structurally deficient bridges, the State must devote a portion of NHPP funds to improve conditions.

4.1.4.4.2— Surface Transportation Program (STP)

MAP-21 continues the STP, providing flexible funding that may be used by States and localities for projects to preserve or improve conditions and performance on any federal-aid highway, bridge projects on any public road, facilities for non-motorized transportation, transit capital projects, and public bus terminals and facilities.

Most current STP eligibilities are continued, with some additions and clarifications. Activities of some programs that are no longer separately funded are incorporated, including transportation enhancements (replaced by “transportation alternatives”, which encompasses many transportation enhancement activities and some new activities), recreational trails, ferry boats, truck parking facilities, and Appalachian Development Highway System projects (including local access roads). Explicit eligibilities are added for electric vehicle charging infrastructure added to existing or included within new fringe and corridor parking facilities, and projects and strategies that support congestion pricing, including electronic toll collection and travel demand management strategies and programs.

Fifty percent of a State’s STP funds are to be distributed to areas based on population (sub-allocated), with the remainder to be used in any area of the State. Consultation with rural planning organizations, if any, is required. Also, a portion of its STP funds (equal to 15 percent of the State’s FY 2009 Highway Bridge Program apportionment) is to be set aside for bridges not on Federal-aid highways (off-system bridges), unless the Secretary determines the State has insufficient needs to justify this amount. A special rule is provided to allow a portion of funds reserved for rural areas to be spent on rural minor collectors, unless the Secretary determines this authority is being used excessively.

4.1.5—Project Selection Process

The following is a series of steps used by program managers in Bridge Design Section in the selection of bridge projects for inclusion in the Highway Program.

4.1.5.1—Bridge Preservation (On System) & Bridge Preventive Maintenance Programs

CE or PCE, Categorical Exclusion or Programmatic Categorical Exclusion

1. Work with the Planning Section to identify projected funding for the eight (8) year Bridge Program. Determine the appropriate program investment to fulfill program needs.
2. Network Analysis (based on core elements for various projected outcomes)
   a. Work with the Bridge Management System, removing previously programmed structures, to perform a network analysis in order to determine a potential candidate list for repair, preventive maintenance, and rehabilitation and replacement projects. The analysis will be based on a specified element list and criteria for each type of project, set by the Program Manager.
3. Candidate Selection will focus on the following:
   a. Removing Structurally Deficient Bridges from Enhanced NHS routes to meet MAP-21 performance goals.
   b. Repair, Preventive Maintenance and Rehabilitation projects that will improve or extend the service life of the structures.
   c. Return structurally deficient structures to a non-deficient condition.
   d. Remove posted bridges from established truck routes.
   e. Remove deficient timber bridges.
4. Distribute potential candidate list to the Districts and Bridge Maintenance Section, requesting the following:
   a. Prepare a District priority list of candidate structures based on potential candidate list provided, Legislative and MPO input, and other needs not identified within the potential candidate list.
   b. Prepare Stage 0 Structural Site Survey forms for candidate structures to be considered for action.
   c. Prioritize recommended candidate structures.
5. District submits a prioritized list of structures for consideration and a Stage 0 Structural Site Survey form for each structure.
6. The Program Manager prepares a list of projects composed of structures recommended by the Districts and then prepares a Stage 0 Parametric Cost Estimate for each project. Additional work and structures may be added to projects to complete a section of roadway or complete a scope of work.
7. The Program Manager prepares a short list of proposed projects based on available funding. The short list is re-evaluated by the Bridge Management Section to validate the recommendations by the Program Manager.
8. A meeting is held with the Bridge Preservation Selection Committee to discuss and select the final list of projects for the Bridge Preservation On System Program and the Bridge Preventive Maintenance Program (includes Historic Bridges).
9. Once the final selections are made, a transmittal of the final selections is sent back to the Districts to inform them which projects are being proposed for inclusion in the Highway Bridge Program.

10. The Program Manager orders project numbers and estimates funding requirements for the various phases of work to be performed on the project and submits the information to the Planning Section for inclusion in the Preliminary Highway Program. The Preliminary Highway Program for the upcoming fiscal year is submitted to the Joint Transportation Committee. The Preliminary Highway Program is used to present the program to the public during the October Road Show.
11. During the Legislative Session, the Highway Program is submitted to the Joint Transportation Committee for review and approval with changes from the Preliminary Highway Program noted. Approval of this document solidifies our program commitments to the Legislature.
12. Once projects are selected by the Bridge Preservation Selection Committee, the Project Manager assigned to the project may refine the alignment or concept and then completes the other documentation. The Stage 0 Feasibility Study is submitted to the Program Manager for review and approval to move to Stage 3 Design.

EA or EIS, Environmental Assessment or Environmental Impact Statement

Projects with environmental clearances of EA or EIS, Environmental Assessment or Environmental Impact Statement are usually selected after a more detailed Stage 0 Feasibility Study is conducted. Often these projects will continue through Stage 1 Environmental before they are added to the Highway Program.

4.1.5.2—Bridge Preservation (Off-System) Program

The Off System Program is primarily a bridge replacement program. Rehabilitation and preventive maintenance are eligible activities under this program, but seldom performed. Refer to *Federal Aid Off-System Highway Bridge Program Guidelines* posted on LADOTD Bridge Design Section website for additional information.

The matching funds for this program are provided by the Parish Transportation Fund, which is a designated fund provided by the State Legislature and can vary on a yearly basis.

Deficient structures on off system routes which are part of the National Highway System are funded through the National Highway Performance Program and tracked under the Bridge Preservation (On-System) and Bridge Preventive Maintenance Programs.

CE or PCE, Categorical Exclusion or Programmatic Categorical Exclusion

1. Work with the Planning Section to identify projected funding for the two (2) year Off-System Bridge Program. Determine the appropriate program investment to fulfill program needs. Since the 20% match funds are provided by designated funding from the Legislature, the Program Manager must request concurrence in writing for the distribution of these funds from the Project Development Division Chief or as required. This part of the process is usually initiated in September of the year prior to the program submittal cycle.
2. Upon approval of funding, we request a list of qualifying parishes from our Bridge Maintenance Section. In the future Bridge Management may provide additional information on qualifying structures.
3. A construction cost ($\$/ft^2$) is established based on current bid history and this unit cost is used to determine parish allocations of funding.
4. The funding allocation to each parish is the respective pro rata share of deficient off-system bridges based on deck area. A parish's percentage allocation of funding is determined by estimating the cost of replacement of qualifying structures for the parish divided by the total cost of replacement of the sum of all qualifying structures for parishes statewide. The percentage is then multiplied by the available funding to determine the parish allocation. A qualifying structure is a structure that is classified as Structurally Deficient or Functionally Obsolete and has an NBI Sufficiency Rating of 50 or less for replacement or 80 or less for rehabilitation.

5. Each parish's projected funding balance is calculated based on current balance plus newly allocated funds. Current balances may contain deficits from previous projects construction, engineering and C, E &I cost, or positive balance or credit from deferred spending.
6. A letter soliciting candidate projects is sent to each parish with an explanation of the proposed parish balance, Off-System Highway Bridge Program requirements, a Stage 0 Environmental Checklist Form and a list of qualifying structures in the parish. Parishes eligible to participate will receive the solicitation by certified return mail. Eligible parishes are allowed to select replacement structures within the limits of the proposed funding balance or defer spending and allow their balance to accumulate for future projects. This part of the process is usually completed by the end of March of the program submittal year.
7. Some of the program requirements are as follows:
   a. The parish has requested the addition of the structure to the program by parish council resolution.
   b. Structures must qualify for the proposed action.
   c. The estimate of the proposed action is within the limits of the available funding balance.
   d. Parish agrees to provide right of way, utility relocation and construction permits. Usually the right of way is donated by the adjacent land owners or a Right of Entry is granted to construct the project.
   e. Each project submitted must have a unique name and have the structures properly located on a location map.
8. The selected projects are submitted to the ADA of Operations for the respective District for review and approval.
9. Once the final selections are made, a transmittal of the final selections is sent back to the Districts to inform them which projects are being proposed for inclusion in the Off-System Highway Bridge Program.
10. The Program Manager orders project numbers and estimates funding requirements for the various phases of work to be performed on the project and submits the information to the Planning Section for inclusion in the Preliminary Highway Program. The Preliminary Highway Program for the upcoming fiscal year is submitted to the Joint Transportation Committee. The Preliminary Highway Program is used to present the program to the public during the October Road Show.
11. During the Legislative Session, the Highway Program is submitted to the Joint Transportation Committee for review and approval with changes from the Preliminary Highway Program noted. Approval of this document solidifies our program commitments to the Legislature.
12. At this point, the Stage 0 Feasibility Study is complete and the project is approved to move to Stage 3 Design.

EA or EIS, Environmental Assessment or Environmental Impact Statement

Projects with environmental clearances of EA or EIS, Environmental Assessment or Environmental Impact Statement are usually selected after a more detailed Stage 0 Feasibility Study is conducted. Often these projects will continue through Stage 1 Environmental before they are added to the Highway Program.

4.1.5.3—Louisiana Local Public Agency (LPA)

There are many different programs under LPA by which bridges may enter the Highway Program, and each has an individual selection process. For individual programs under LPA and selection processes, refer to the Louisiana Public Agency Manual in LADOTD LPA website.

4.1.6—Highway Program Development Timeline

During the Legislative Session, the Highway Program for construction projects in the upcoming fiscal year and other projects in various planning stages are submitted for Legislative approval. After the approval of the Highway Program, the Planning Section will begin to develop the next Highway Program.

Steps to the development of the Highway Bridge Program are as follows:

January—Prepare and distribute a list of prospective candidate bridges to the Districts for consideration for prospective new projects. See Project Selection Process for details. In addition to this request for projects, the Bridge Design Section is continuously receiving Stage 0 Structural Site Surveys from Districts identifying urgent needs. Urgent needs are addressed with a high priority, as required.

May—Receive proposed candidate project list from Districts along with a Stage 0 Structural Site Survey form. This site survey identifies information about the project site conditions, proposed maintenance of traffic, constructability issues, potential environmental and permit issues, utility and right of way conflicts, and any other issues that could affect the cost, alignment, project timeline, or selection of the project.

June—Prepare Stage 0 reports for proposed candidate projects based on a parametric estimations and information contained in the Stage 0 Structural Site Survey forms. The Stage 0 will contain a Scope and Budget Worksheet, a parametric estimation, a Stage 0 Structural Site Survey Form, and any other pertinent information necessary to consider the project during the Bridge Preservation Selection Committee meeting.

July—Bridge Preservation Selection Committee meets to select candidate projects. Once projects are selected, order project numbers.

August—Submit proposed Highway Bridge Program to Planning for inclusion in the Highway Program.

September—Draft Highway Program is disseminated for review and comment by program managers. This is our opportunity to make sure the Draft Highway Program is accurate and complete.

October—The Preliminary Highway Program for the upcoming fiscal year is submitted to the Joint Transportation Committee. The Preliminary Highway Program is used to present the program to the public during the October Road Show.

Legislative Session—During the Legislative Session, March through June, the Highway Program is submitted to the Joint Transportation Committee for review and approval with changes from the Preliminary Highway Program noted. Approval of this document solidifies our program's commitments to the Legislature.

4.1.7—Preliminary Stage 0 Feasibility Studies for Bridge Projects

Preliminary Stage 0 Feasibility Studies are prepared by the Bridge Program Managers. When the preliminary candidate list is received from the District, the Program Managers will analyze the structures and the priorities, and develop feasibility studies for more than enough candidates to populate the program for the available funding. Preliminary Stage 0 Feasibility Studies are composed of the following documents:

- **Preliminary Scope and Budget Checklist**

  This document is usually filled out by the Project Manager assigned to the project. This checklist is posted on DOTD Project Management Section web site.

- **Stage 0 Structural Site Survey**

The Stage 0 Structural Site Survey is a form that is filled out by the District to communicate preliminary site information about the candidate structure. This form will describe the proposed action, general information about the existing site conditions, proposed maintenance of traffic, constructability issues, existing hydraulic conditions, and existing utility and right of way potential impacts. The District will also submit pictures to communicate additional site information to the Program Manager. See Attachment A and B for Stage 0 Structural Site Survey Forms for Bridge Preservation (On System) and Bridge Preventive Maintenance projects. Electronic file of the forms can be downloaded from Bridge Design Section web site under downloads.

- **Parametric Cost Estimate**

The Program Manager will prepare a parametric cost estimate based on the information provided through the Stage 0 Structural Site Survey and the proposed action. See Attachment C for the Parametric Cost Estimate Form and Section 4.1.8 for parametric cost estimate guidelines. Electronic file of the Parametric Cost Estimate Form can be downloaded from Bridge Design Section web site under downloads.

- **Environmental Checklist**

This document is usually filled out by the Project Manager assigned to the project. This checklist is posted on DOTD Project Management Section web site.

The Stage 0 Structural Site Survey and the Parametric Cost Estimate will be used to determine the feasibility of the project. These projects will be the type of project with environmental clearance of CE or PCE, Categorical Exclusion or Programmatic Categorical Exclusion.

Once projects are selected by the Bridge Preservation Selection Committee, the Project Manager assigned to the project may refine the alignment or concept and complete the other documentation. The Stage 0 Feasibility Study is then submitted to the Program Manager for review and approval to move to Stage 3 Design. Upon approval the Stage 0 Studies are submitted to the Planning Section for filing and documentation.

Projects with environmental clearances of EA or EIS, Environmental Assessment or Environmental Impact Statement, are usually selected after a more detailed Stage 0 Feasibility Study is conducted.

4.1.8—Parametric Cost Estimation Guidelines

Parametric cost estimation is an estimate prepared by taking known parameters (identifiable portions of the work) and applying rational judgment to the cost based on preliminary information. For this process to work, one must account for the majority of the major work items in the estimate and then apply a contingency factor to account for unknowns.

The Department reports the bare bridge cost to the FHWA for most bridge projects, therefore we build off of that information and utilize that collection of cost information to develop bridge cost based on structure type. This cost data is referred to as Main Bridge Items (FHWA), as shown below in Appendix C.

When sizing a structure to be replaced and limited information is available, we utilize the existing structure information to project a bridge size based on historical information of similar crossings.

The parametric cost estimation guidelines are summarized in a table format, as depicted in Appendix D. These guidelines should be applied along with engineering judgment when preparing the Parametric Cost Estimate Form.

4.2—INTERSTATE LIGHTING PROGRAM AND LIGHTING PERMITS ON STATE HIGHWAYS

Electrical Engineer Manager in Bridge Design Section is the Program Manager overseeing the Interstate Lighting program and lighting permits on state highways. For Interstate highways, DOTD administers a program to fund a portion of the initial installation costs. Local governments must enter into an agreement to maintain and operate the lighting. If lighting is installed along state highways, it must be paid for, owned, maintained, and operated by the local government (city, town, or parish). A permit must be obtained from DOTD prior to any installation work so that we can ensure that the lighting meets all safety requirements.

Refer to LADOTD bridge design website for program details.

APPENDIX A—PRESERVATION BRIDGE (ON SYSTEM) STAGE 0 STRUCTURAL SITE SURVEY

STRUCTURE NO. _____ RECALL NO. _____
(14 digit number)

STRUCTURE NAME / FEATURE CROSSED

_____

(Attach the Structure Inventory and Appraisal Form)

ATTACHMENTS:

1. Project Site Map:
   Provide a map with the structure number and location shown along with any state route detour information.
2. General Plan Sheet:
   Provide a copy of the general plan sheet of the existing structure if available.
3. Photographs:
   Provide photographs showing the following:
   a. Structure number.
   b. Upstream, downstream (railroad or feature crossed), or both; toward the structure and looking away. Include features that may affect hydraulic design and constructability.
   c. Up station and down station along bridge centerline (project geometry).
   d. Bridge embankment / abutment, visible utility lines or markers.
   e. For repair or rehabilitation projects, individual areas of the structure to be addressed in the project along with the deficiencies described.
   f. Significant features, buildings, residences, businesses, environmental impacts, constructability issues, etc.

PROPOSED ACTION:

Provide a detailed project scope with additional photographs as needed:

_____

GENERAL

(Circle the appropriate response and explain as indicated)

Is there any unusual frequency and / or types of accidents or other safety concerns at this site?

Is there a vertical or horizontal clearance problem at this site? (Vehicular/Boat/Train)

Are there any bridge structures within 1000 feet of this structure that may be affected by the work being proposed on this structure?

Have any significant repairs been done to the structure that will improve the NBI condition rating of the structure?

What is the existing roadway pavement type?

Are the existing shoulders along the route paved or aggregate? What are the width of the shoulders?

Are there any future plans for overlaying or widening the route, paving the shoulders, or any other improvements around the existing structure? List the types of improvements.

Has the bridge been overlaid? Describe overlay material and thickness.

Are there any existing pedestrian or bicycle facilities in the vicinity of this bridge site?

Are there any existing maintenance problems at this site that need to be addressed under the new project?

Are there any significant uses of this route for industrial or agriculture purposes that would result in high truck volumes?

MAINTENANCE OF TRAFFIC

Can the District support closing the road during construction? Is there an alternate state route available?

(Y or N) If so, please provide a map, an explanation of the alternate state route, and the required detour mileage around the bridge site on the state route. This is very important to estimating the cost of the project. Please provide as much information as possible.

If an on-site diversion is provided, what side of the existing bridge would best facilitate the detour construction, what type of detour structure do you recommend, and what obstructions are present? Could the on-site detour be low speed (5 mph) with a stop condition?

If phased construction is considered at this site, could the District support a one lane roadway with signals during construction?

Are there any navigational requirements at this bridge site? If so, what type of vessels use the waterway?

Are there any railroad requirements that will need to be addressed at this bridge site?

(Overpass, underpass, at grade crossing, parallel track, etc.)

CONSTRUCTABILITY

Are there any obvious access issues that may affect the contractor's construction of the bridge?

Is the water depth at the site sufficient to float barges? Will barges obstruct navigation?

Are there any obvious overhead obstructions that may impede pile driving operations?

Are there any residences, businesses, or facilities in the area that may be affected by the noise and vibration from pile driving operations?

Are there any driveways or property entrances that will have to be maintained during construction, relocated, and / or reconstructed?

Are there any other issues that could affect constructability that need to be accounted for in the construction estimate?

HYDRAULIC

Are there any water control structures that may be affected by the work being proposed on this structure?

Does the roadway have a history of overtopping along the floodplain in the vicinity of this project? If so, what is the frequency?

Is there any evidence or history of debris build up at this site?

Is there any evidence or history of abutment scour, degradation of the channel or channel migration at this bridge site?

UTILITIES

Are there any utilities located within 100 feet from the roadway centerline and within 1000 feet of the bridge ends?

List all apparent utilities at the site. Are there any utilities supported by the structure?

RIGHT OF WAY

Are there any obvious right of way impacts, relocations or business displacements required because of the proposed construction?

Are there any building structures or improvements that may be affected by the work being proposed on this structure?

REHABILITATION

STRUCTURAL:

GENERAL

Are there any structural components of the bridge that exhibit deterioration or are in need of repair or replacement?

Is the structure clean enough to make a good assessment of the scope of work for the project?

Is the bridge deck in need of repair, preventive maintenance, or replacement?

Do the approach slabs require repair or replacement?

For concrete roadways, is the pavement relief joint between the concrete roadway and approach slab in place and functional? Does it need to be re-cut and sealed?

Is the bridge abutment experiencing erosion, loss of material under approach slab, or failure of the revetment?

Is the bridge experiencing bent settlement? (Provide location and pictures)

Is there excessive spalling of concrete on the structure? Are there any areas with exposed reinforcing steel?

Is the deck or any other area of the structure exhibiting delaminating concrete?

Does the fender system require repair or replacement?

STRUCTURAL STEEL

Is the protective coating on the steel structure in satisfactory condition? Are there areas of excessive corrosion? (Provide location and pictures)

Are there any fatigue cracks or details that need repair?

MOVABLE BRIDGE:

MECHANICAL SYSTEMS

Has a significant mechanical rehabilitation of this structure been performed in the last 20 years?

Is there significant corrosion of mechanical shafts, anchor bolts, brackets, couplings, or any other mechanical equipment?

Is there unexpected or excessive lubricant leaking from shaft couplings, bearings, gearboxes, or motors?

Is there unexpected noise or vibrations coming from shaft couplings, bearings, gear boxes, pumps, or motors during operation of the span?

Is there radial or axial movement of shafts in couplings, bearings gear boxes, pumps, or motors during operation of the span?

Is there excessive wear on open gear teeth?

Are the brakes worn, slipping, or unreliable?

Are the span locks operating? Are they reliable?

Is the span showing signs of being imbalanced? (Is a balance wheel riding the track? Are the motors drawing excessive current? Is the span seating too hard/too soft?)

Are the movable barriers functioning reliably? Do they get impacted regularly by vehicular traffic? Are the counterweight ropes for the barriers rusted, frayed, or flattened?

(Hydraulic Systems) Are there frequent leaks in the hard piping or failures of the flexible hydraulic hoses?

(Vertical Lift Bridges) When was the last time the counterweight ropes were changed? Are the outer strands rusted, frayed, or flattened?

(Swing Span Bridges) Does the center pivot bearing leak lubricant or is there any noise or vibration coming from the center pivot bearing during operation of the span?

(Swing Span Bridges) Do the wedges get stuck periodically?

(Pontoon Span Bridges) Is the ballast system operating reliably?

(Pontoon Span Bridges) Are the apron spans operating reliably?

ELECTRICAL SYSTEMS

Are any components of electrical equipment in need of repair or replacement? List all components.

Are any by-pass switches required to operate the bridge? Explain.

Have any electrical systems or equipment been replaced or rehabilitated? Explain and indicate when.

Have any conductors required splicing? Explain.

Have any modifications to the electrical system or controls been added that were not in the original design? Explain.

Are there any reoccurring electrical maintenance issues? Explain.

Does the bridge operate correctly on generator?

Do any circuit breakers trip? Which ones and under what conditions?

Are any portions of the electrical or control systems not in use or not operational? Explain.

Does the control sequence ever contain abnormal or unwanted events? Explain.

Has any electrical equipment been effected by flood waters? Explain and provide pictures.

Prepared by: Date:

Phone Number:

Approved By: ADA – Operations

APPENDIX B—BRIDGE PREVENTIVE MAINTENANCE PROGRAM (ON-SYSTEM) STAGE 0 STRUCTURAL SITE SURVEY

NOTE: If many structures are involved with the same type of work (ex. joint sealing, deck spall repair, etc.), separate survey sheets are not required, however; answer any applicable questions that pertain to the structures and provide a table listing all of the structure numbers (14 digit) and Proposed Actions.

STRUCTURE NO. _____ RECALL NO. _____
(14 digit number)

STRUCTURE NAME / FEATURE CROSSED

_____

(Attach the Structure Inventory and Appraisal Form)

ATTACHMENTS:

1. Project Site Map:
   Provide a map with the structure number and location shown along with any state route detour information.
2. General Plan Sheet:
   Provide a copy of the general plan sheet of the existing structure if available.
3. Photographs:
   Provide photographs showing the following:
   a. Structure number
   b. Upstream, downstream, (railroad or feature crossed) both toward the structure and looking away. Include features that may affect hydraulic design and constructability.
   c. Up station and down station along bridge centerline (project geometry).
   d. Bridge embankment / abutment, visible utility lines, or markers.
   e. For repair or rehabilitation projects, individual areas of the structure to be addressed in the project along with the deficiency described.
   f. Significant features, buildings, residences, businesses, environmental impacts, constructability issues, etc.

PROPOSED ACTION:

Provide a detailed project scope with additional photographs as needed:

_____

GENERAL

(Please explain details when applicable or place an NA if not)

Are there any unusual frequency and/or types of accidents or other safety concerns at this site?

Are there any bridge structures within 1000' of this structure that may be affected by the work being proposed on this structure?

Have any significant repairs been done to the structure that will improve the NBI condition rating of the structure?

Any there any future plans for overlaying or widening the route, paving the shoulders or any other improvements around the existing structure?

Is the bridge supported on skewed bents?

Has the bridge been overlaid with asphalt or other materials?

Are there any existing maintenance problems at this site that need to be addressed under the new project?

Is there any significant use of this route for industrial or agriculture purposes that result in high truck volumes?

MAINTENANCE OF TRAFFIC

Can the District support closing the road during construction? Is there an alternate state route available?

If phased construction is considered at this site, could the District support a one-lane roadway with signals during construction?

Are there any navigational requirements at this bridge site? If so, what type of vessels use the waterway?

Are there any railroad requirements that will need to be addressed at this bridge site?
(Overpass, underpass, at grade crossing, parallel track, etc.)

CONSTRUCTABILITY

Are there any obvious access issues that may affect the contractors' construction of the bridge?

Are there any driveways or property entrances that will have to be maintained during construction, relocated and / or reconstructed?

Are there any other construction related issues that will affect the constructability of the project that need to be accounted for in the construction estimate?

UTILITIES

Are there any utilities supported by the structure?

RIGHT OF WAY

Are there any building structures or improvements that may be affected by the work being proposed on this structure?

PREVENTIVE MAINTENANCE ACTIVITIES

GENERAL

Are there any structural components of the bridge that exhibit deterioration or in need of repair?

Is the bridge experiencing bent settlement? (Provide location and pictures)

Is there excessive spalling of concrete on the structure? Is there any indication of an underlying problem with delamination?

CLEANING & PAINTING

Is the protective coating on the steel structure in satisfactory condition? Are there areas of excessive corrosion? (Provide location and pictures)

BRIDGE DECK & APPROACHES

Is the bridge deck in need of repair, patching, rehabilitation, or replacement?

Are the bridge joints deteriorated or in need of repair and/or re-sealing?

Do the approach slabs require repair or replacement?

Is the pavement relief joint on concrete roadways at bridge ends in place and functional? Does it need to be re-cut and sealed?

Is the bridge deck drainage system in place and functioning? Does it require repair or rehabilitation?

BRIDGE BEARINGS

Are the bridge bearings deteriorated and in need of repair or replacement?

Is there any evidence or history of debris build up at this site?

BRIDGE & ABUTMENT SCOUR

Is there any evidence or history of abutment scour, degradation of the channel, or channel migration at this bridge site?

Is there any need for foundation repair due to bridge or abutment scour?

Are there any navigational requirements at this bridge site? If so, what type of vessels use the waterway?

Prepared by: Date:

Phone Number:

Approved By: ADA – Operations

APPENDIX C—STAGE 0 PARAMETRIC COST ESTIMATE WORKSHEET

State Project Number:

Project Name:

Routes:

Route Classification:

Structure Numbers:

Recall Numbers:

Control Sections:

Total Project Cost:

Project Scope:

SP No.:

Structure No.:

Main Bridge Items (FHWA)		Approaches	Approaches	Main Spans	Approaches	Approaches
Bridge Structure	Type					
	Length					
	Width					
	ft^2					
	Cost / ft^2					
	Total					

Other Bridge Items	Number of Units	Length	Width	ft^2 or Unit	Cost / ft^2 or Unit	Total
Approach Slabs						
Abutment Protection						
Movable Bridge Mechanical & Electrical						
Pier Protection						
Bridge Removal						
Construction Access						
Guardrail						

Site Preparation Items		
Roadway Items		
Maintenance of Traffic Items		

Temporary Detour Roads & Bridges	Number of Units	Length	Width	ft^2 or Unit	Cost / ft^2 or Unit	Total
Detour Roadway						
Detour Bridge						

SP No.:

Structure No.:

Additional Items	Number of Units	Length	Width	ft^2 or Unit	Cost / ft^2 or Unit	Total

Subtotal:	
Mobilization (10% of Subtotal)	
Total:	
Miscellaneous & Contingencies (10% - 20% of Total)	
Construction Cost of Structure Total	

Construction Comments:

Total Construction Cost	
Real Estate	
Utilities	
Environmental	
Special Considerations	
Total Cost:	

APPENDIX D—PARAMETRIC COST ESTIMATION GUIDELINES

D.1—Bridge Sizing Information:

Table D.1-1: Proposed Bridge Length

(x = existing bridge length)

	Existing	New
Slab Span	40' < x < 80'	80'
	80' < x < 100'	100'
	x > 100'	1.10x
Prestressed Girder Bridge:	x > 100'	1.15x
Railroad Overpass (Fill Section, max 2000')	x	2.5x
Railroad Overpass (Cut Section)	x	1.15x
Movable Bridge Replaced with Fixed Bridge	x	2.0x – 4.0x
Long Bridges	x > 1000'	1.05x

Table D.1-2: Prestressed Girder Span Sizing Lengths

Quad Beams	40'
Type II	50'
Type III	65' – 85’
Type IV	90’ - 105'
Type BT72	120' – 135’
Type BT78	130’ – 145’
LG-25	30' – 53'
LG-36	50' – 98'
LG-45	70' – 119'
LG-54	90' – 133'
LG-63	110' – 154'
LG-72	130' – 171'
LG-78	150' – 183'

Table D.1-3: Proposed Bridge Width

	Current ADT	Typical Bridge Width
Rural Collector	<2000	30'
	>2000	40' - 44'
Other Structures, use standards		

D.2—Bridge Cost Groups:

Main Bridge Items (FHWA)

Main Bridge Items (FHWA) are the bridge pay items that each DOT is required to submit to FHWA on a yearly basis for all bridge projects let within the year. These items include structural excavation, sheet piles, piles, test pile related items, drilled shafts, concrete, girders, railings, structural metalwork, reinforcing steel, joints, cofferdams, etc.

There are many variables that may affect the cost of the main bridge items for bridges such as depth of crossing, foundation requirements, construction access, environmental conditions, hydraulics, geometric requirements, etc. Consideration should be given to the appropriate cost used within the given range based on the anticipated construction method, the proposed structure, and the site conditions.

Table D.2-1: Bridge Cost Estimate (Includes Super and Sub Structures) Based On Main Bridge Items (FHWA)

Precast Concrete Slab Span Bridges on Pile Bents	\$100 - \$150 / ft^2
Cast in Place Slab Span Bridges on Pile Bents	\$65 - \$85 / ft^2
Prestressed Concrete Girder Bridges on Pile Bents	
Quad Beam Girders	\$85 - \$105 / ft^2
Type II Girders	\$70 - \$85 / ft^2
Type III Girders	\$75 - \$90 / ft^2
Type IV Girders	\$90 - \$135 / ft^2
Type BT72	\$150 - \$190 / ft^2
Type BT78	\$180 - \$220 / ft^2
Type BT78 (HPC) (Coastal Structures)	\$200 - \$250 / ft^2
Prestressed Concrete LG Girders (Girder Only) [1]	
LG 25	\$120 - \$130 / ft
LG 36	\$130 - \$140 / ft
LG 45	\$140 - \$150 / ft
LG 54	\$160 - \$170 / ft
LG 63	\$165 - \$175 / ft
LG 72	\$170 - \$180 / ft
LG 78	\$190 - \$210 / ft
Prestressed Concrete Girder Bridges on Column Bents	Add \$5 - \$10 / ft^2
Major River Crossing[2]	\$300 - \$325 / ft^2
Railroad Overpass (Steel Span Structure)[3]	\$150 - \$180 / ft^2
Accelerated Bridge Span Replacement[4]	\$275 / ft^2
Bridge Re-decking Steel Girders (No Widening)	\$100 / ft^2

Notes:

1. The price per square foot for the deck area is not available. The girder price per linear foot is provided for estimation purpose only.

(Notes for Table D.2-1 continued)

2. Based on steel spans on river piers designed for vessel collision loads.
3. Based on typical 1200 feet fill section, main steel span configuration of 110'-130'-110'.
4. Based on Well Road project cost.
5. All numbers shown in this table is the cost per square foot of the deck area, except for the LG girders. The deck area should be calculated using the bridge length (without approach slabs) times the bridge clear road way width (from gutter line to gutter line).

Bridge Widening

Estimate bridge widening at 2/3 the cost of bridge construction of a similar structure. The limit of the deck area should be based on the widened portion of the bridge deck area up to the removal line. Also include the removal of the portion of the bridge as a separate item.

Main Span Structural Units of Movable Bridges

The cost will vary depending on the span size and clearance provided. Cost shown represent medium to large structures.

Table D.2-2: Main Span Structural Units of Movable Bridges

Swing Span	\$950 / ft^2
Vertical Lift Span	\$1,100 / ft^2
Bascule Span (Mid-Level)	\$1,200 / ft^2

Table D.2-3: Other Bridge Items

Approach Slabs	$30 / ft^2
Abutment Scour Protection	
Heavy Rip Rap	$700,000 - $800,000 / bridge
Medium Protection	$200,000 - $300,000 / bridge
Normal Stream Crossings	$25,000 - $100,000 / bridge
Abutment Protection	
Flexible Revetment	$10 / ft^2
Movable Bridge Mechanical & Electrical	
Swing Span	
Electrical System	$800,000 -$1,000,000 / bridge
Mechanical System	$500,000 / bridge
Vertical Lift	
Electrical System	$1,000,000 / bridge
Mechanical System	$750,000 / bridge
Counterweight Ropes	
(Small Bridge)	$200,000 - $400,000
(Large Bridge)	$800,000
Movable Bridge General Items	
Grid Floor	$100 / ft^2
Operator's House	
(Replace)	$500,000
(Rehabilitate)	$250,000
Movable Bridge Pier Protection	
Timber Fender	$450,000 - $500,000 / bridge
Steel Fender with Plastic Walers (Swing Span)	$4,500,000 / bridge
Pier Ring (Elastic Design vessel loads)	$2,500,000 / Pier ring
Bridge Guardrail (average installation) / bridge	$10,000 -$15,000

Bridge Removal Cost

Things to consider when estimating the cost of removal of an existing structure:

- Estimate the structure removal in sections separated into structure type.
- Point in time when the structure will be removed during construction. If the structure is removed early the cost will be high, and if removed late it will likely be low. This is because the contractor will try to control the cash flow for the project using early items.
- Time available for removal.
- Access for removal of the structure.
- Type of structure.
- Whether the existing structure contains hazardous materials.
- Total volume of removal.
- Circumstances for disposal, recycling material, environmental commitments, etc…
- Depth of water and removal limits.
- Type of demolition required.

Table D.2-4: Estimated Cost of Removal

Precast Slab Span Bridge with Pile Bents	\$10 - \$15 / ft^2
Slab Span Bridge with Pile Bents	\$20 - \$30 / ft^2
Concrete Deck Girder Bridge with Pile Bents	\$20 - \$30 / ft^2
Steel Girder Spans on Pile Bents	\$20 - \$30 / ft^2
Concrete Deck Girder or Prestressed Girder Bridges on Column Bents	\$25 - \$35 / ft^2
Steel Girder Spans on Column Bents	\$25 - \$35 / ft^2
Steel High Truss Superstructure with Large Piers / Caissons	\$30 - \$40 / ft^2

Construction Access

Construction Haul Road and Bridge

When it is anticipated that a haul road will be constructed by the contractor and it may be a significant cost, it should be included in the plans as a bid item. Poor soil conditions or environmental commitments may warrant construction of a haul road.

Table D.2-5: Construction Haul Road and Bridge

Haul Road	$200 / LF
Haul Bridge	$600 - $800 / LF

Site Preparation Items

This item is usually between 5% - 10% of the main bridge item cost, depending on the complexity of the new bridge. It pertains to clearing and grubbing, miscellaneous removal of structures and obstructions, other than bridges, site laboratory, utility adjustment, and construction layout.

Road Items

Road construction items are generally divided into two sections: road bed construction and roadway typical section. These items are broken up since there could be a considerable amount of difference in the support structure and fill height as compared to the roadway typical section. Items to consider in selection of the cost for roadway construction is the roadway foundation fill height, ADT, Truck Traffic, terrain and site conditions. For the purpose of early parametric estimation we will use the following guidelines for roadway construction.

Table D.2-6: Road Items

New Roadway Construction	
Rural (2 – 3 Lanes)	$2,500,000 - $3,500,000 / mile
For Bridge Replacement Projects (1400’ of Roadway)	$300,000 - $400,000
Rural (4- Lanes)	$5,000,000 / mile
Urban (2 – 3 Lanes)	$4,000,000 / mile
Urban (4 - 5 Lanes)	$7,000,000 / mile
Interstate Rural	$2,000,000 / lane mile
Interstate Urban	$2,500,000 / lane mile
Roadway Rehabilitation for Bridge Construction	
Minor Overlay (2”)	$125,000 - $150,000 / lane mile
Minor Overlay with Cement Treated Base	$180,000 / lane mile
Medium Overlay (3.5”)	$225,000 / lane mile
Medium Overlay with Cement Treated Base	$250,000 / lane mile

Maintenance of Traffic Items

Items to be considered when estimating the cost for maintenance of traffic is how traffic will be managed, length of construction, complexity of the traffic management plan, and the length of detour. Generally the cost of maintenance of traffic falls between 2% - 10% of the FHWA bridge cost, and larger projects require lower percentage of the bridge cost.

Table D.2-7: Maintenance of Traffic Items

General Cost Ranges for Maintenance of Traffic	
Existing Bridge utilized as Diversion	$50,000 - $500,000
Detour Structure near site	$25,000 - $50,000 / site
Close Road (Signed Detour Route)	$25,000
Traffic Management on Interstate (Major project with temporary barriers and signs)	$4,000 / day
Phased Construction Including Signals	$75,000 (Simple Rural) $250,000 (Pace Car Escort)
Temporary Detour Roads & Bridges	
Detour Roadway Cost	
RC-1 or RC-2 (1,400’ / site)	$250,000 / site
RC-3 (1,400’ / site)	$350,000 / site $10 / ft^2 paved area
Roadway Cross Over (4 lane facility) per crossover	$300,000 – $ 500,000
Detour Bridge Cost	
Standard Bridge Replacement	
(24’ wide Precast Panel Bridge)	
existing bridge < 100’	$100,000
existing bridge > 100'	$130,000 / 100’ bridge
Pipe Sites	$200,000 / site
24’ Acrow Detour (DOTD Supplied)	$1500 - $2000 / LF $60 - $80 / ft^2

Mobilization

Mobilization is generally set at 10% of the overall construction cost estimate for bridge projects and should be included in the parametric estimation.

Miscellaneous & Contingencies

Miscellaneous items and contingencies will usually be set at approximately 10% - 20% when utilizing this detailed parametric estimation method. If a large number of items are accounted for in the estimate, usually 10% is appropriate for contingencies.

Table D.2-8: Additional Cost Information

Cofferdams for Deep River Foundations	$1,250,000 / Cofferdam (Reused) $3,000,000 / Cofferdam (New)
Paint Projects (Cleaning and Painting Lead Paint Bridges)	$8-$14/ ft^2
Noise Barrier Walls	See Figures D.2-1 and D.2-2
(SPMT) Span Movement	$90,000 - $100,000 / Span

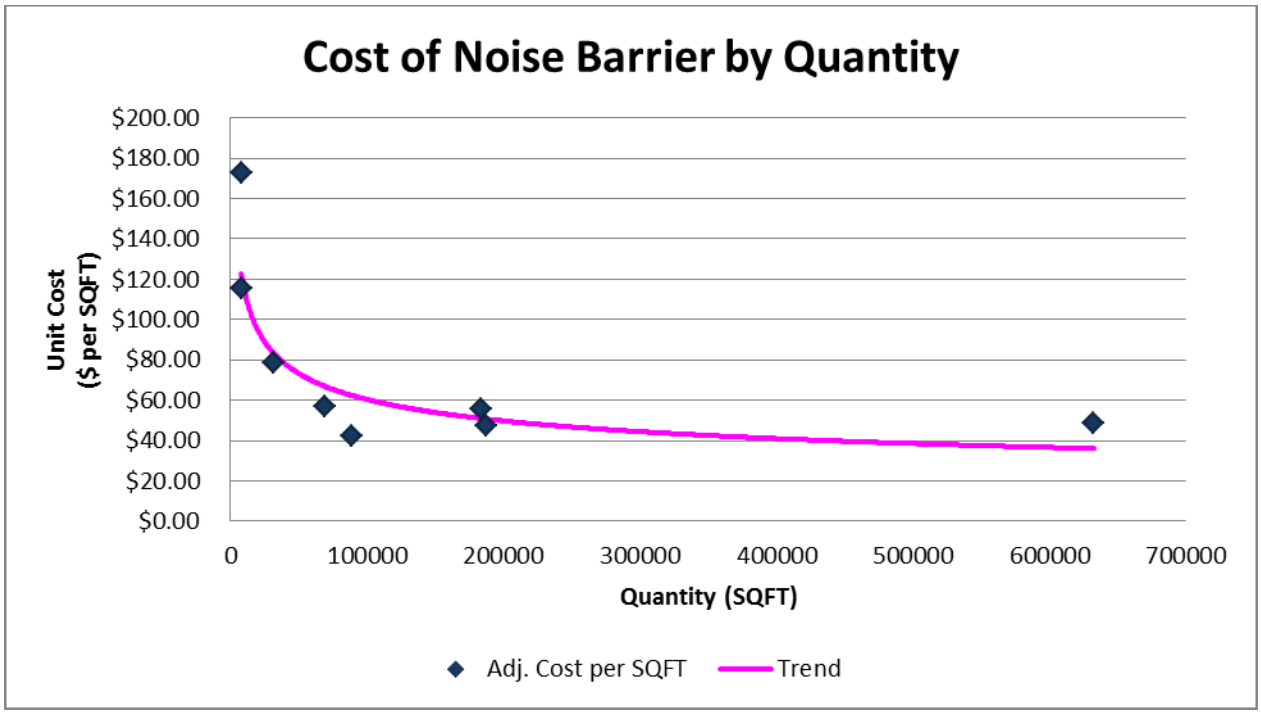

Figure D.2-1: Cost of Noise Barrier by Quantity

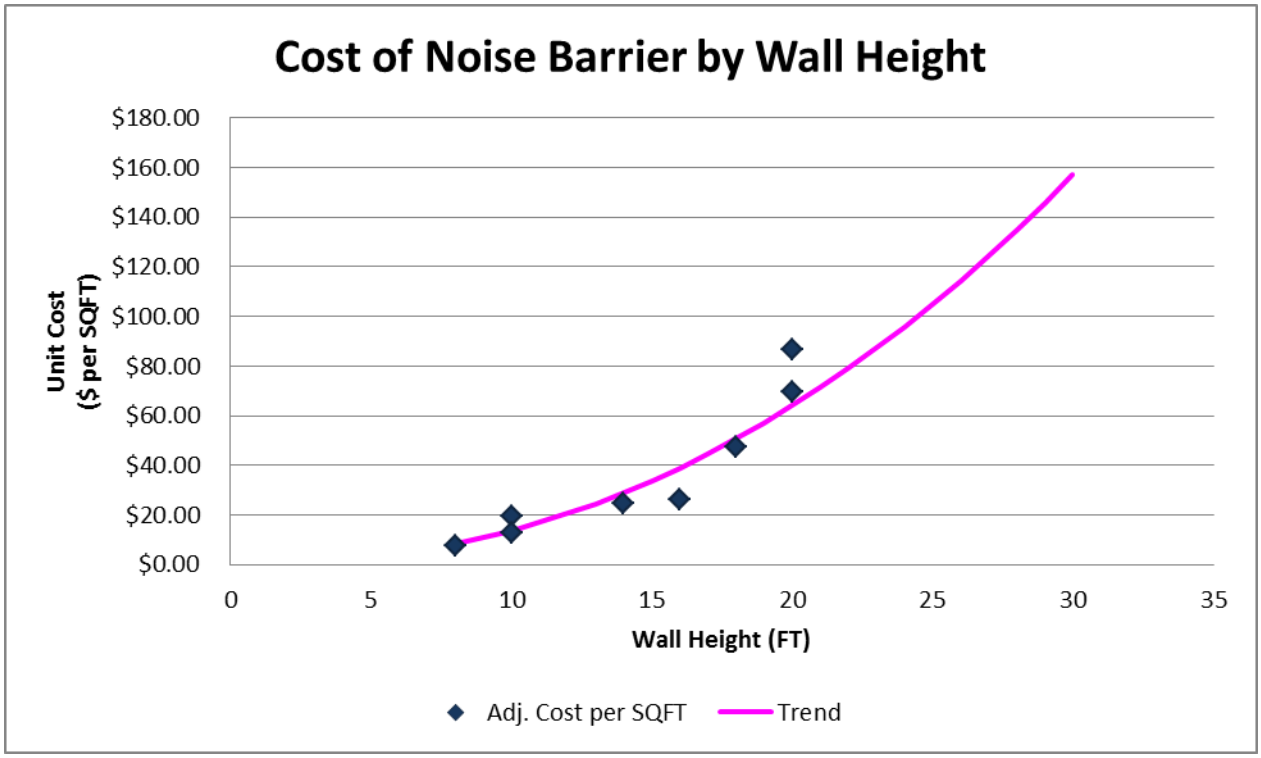

Figure D.2-2: Cost of Noise Barrier by Wall Height

D.3 Preventive Maintenance Cost Information

Table D.3-1: Preventive Maintenance Cost

Hydro-blasting & High Density Concrete Overlay	
Removal of deck / in	\$5/ ft^2-in
Latex modified concrete overlay	\$10/ ft^2-in
Management of Traffic on Interstate for this operation	\$14/ ft^2
Epoxy Deck Overlay System (Depending on allowable application time limits)	\$6-\$9/ ft^2
Joint Replacement Projects	
Removal of Angle Iron End Dams and Anchorages	\$25 / lf
Joint Repair (Polymer Concrete both sides)	\$200-\$230/lf
Joint Sealing System (Preformed Silicone)	\$65 -\$75/lf
Joint Sealing System (Poured System)	\$25-\$35/lf
Finger Joint Trough (Steel Reinforced Elastomeric)	\$600-\$800/lf
Structural Concrete Patching	\$100-200/ ft^2-in
Painting and Protective Coatings	
Cleaning and Painting Lead Based Paint	\$14 - \$17 / ft^2
Cleaning and Overcoating Existing Steel	\$10 - \$12 / ft^2
Concrete Surface Finish	\$2 - \$3.50 / ft^2

APPENDIX F—EXAMPLE STAGE 0 REPORT

STAGE 0
Preliminary Scope and Budget Checklist

A. Project Background

District 05 Monroe Parish 42 Richland

Route LA 132 Control Section 842-13

Begin Log Mile 0.07 End Log Mile 0.28

Project Category (Safety, Capacity, etc.): Safety

Date Study Completed: 11/18/2011

Describe the existing facility: 391' x 19' Steel High Truss

Functional classification: RC-2 Number and width of lanes: 2 – 12' lanes

Shoulder width and type: 4' paved Mode: _____

Access control: _____ ADT: 500 Posted Speed: 55

Describe any existing pedestrian facilities (ADA compliance should be considered for all improvements that include pedestrian facilities): N/A

Describe the adjacent land use: Residential and Trees

Who is the sponsor of the study? _____

List study team members: _____

Will this project be adding miles to the state highway system (new alignment, new facility)? If yes, has a transfer of ownership been initiated with the appropriate entity? N

Are there recent, current or near future planning studies or projects in the vicinity? unknown

If yes, please describe the relationship of this project to those studies/projects. _____

Provide a brief chronology of these planning study activities: _____

B. Purpose and Need

State the Purpose (reason for proposing the project) and Need (problem or issue)/Corridor Vision and a brief scope of the project. Also, identify any additional goals and objectives for the project.

The project is needed due to the condition of the bridge. The substructure is rated as poor condition. The entire structure has a sufficiency rating of 42.2 which is structurally deficient.

C. Agency Coordination

Provide a brief synopsis of coordination with federal, tribal, state and local environmental, regulatory and resource agencies.

What transportation agencies were included in the agency coordination effort?

Describe the level of participation of other agencies and how the coordination effort was implemented.

C. Agency Coordination (Continued)

What steps will need to be taken with each agency during NEPA scoping?

_____

_____

_____

_____

D. Public Coordination

Provide a synopsis of the coordination effort with the public and stakeholders; include specific timelines, meeting details, agendas, sign-in sheets, etc. (if applicable).

_____

_____

_____

_____

_____

E. Range of Alternatives – Evaluation and Screening

Give a description of the project concept for each alternative studied.

What are the major design features of the proposed facility (attach aerial photo with concept layout, if applicable).

Alternative 1: Detour Route

Alternative 2: Phased Construction

Alternative 3: Detour Bridge

Alternative 4: New Alignment

Alternative 5: New Alignment

Will design exceptions be required? Yes

What impact would this project have on freight movements? _____

_____

Does this project cross or is it near a railroad crossing? N

Was the DOTD's "Complete Streets" policy taken into consideration? N

- If so, describe how. Include a brief explanation of why the policy was determined to be feasible or not feasible. _____

_____

How are Context Sensitive Solutions being incorporated into the project? unknown

_____

_____

Was the DOTD's "Access Management" policy taken into consideration? If so, describe how. Unknown

Were any safety analyses performed? If so describe results. N

_____

Are there any abnormal crash locations or overrepresented crashes within the project limits? No

What future traffic analyses are anticipated? _____

_____

E. Range of Alternatives – Evaluation and Screening (Continued)

Will fiber optics be required? If so, are there existing lines to tie into? unknown

Are there any future ITS/traffic considerations? N

Is a Transportation Management Plan (TMP) required?

- Is there a significant project in the Transportation Management Area (TMA)? N
- What is the scope? N/A
- What data will need to be collected to address the content and scope of the TMP? N/A

Was Construction Transportation Management/Property Access taken into consideration? Y

Were alternative construction methods considered to mitigate work zone impacts? Y

Describe screening criteria used to compare alternatives and from what agency the criteria were defined.
Safety & Costs

Give an explanation for any alternative that was eliminated based on the screening criteria.
Alternative No. 1 was eliminated due to the heavy traffic on the roadway. A detour route would not have been able to handle the increase in traffic.
Alternative No. 2 called for split slab construction. This was eliminated due to the poor condition of the bridge.
Alternative No. 3 was eliminated due to the excessive cost of such a long detour bridge.
Alternative No. 4 was eliminated because it would require high costs in acquisition of right of way.

Which alternatives should be brought forward into NEPA and why?

Did the public, stakeholders and agencies have an opportunity to comment during the alternative screening process? N

Describe any unresolved issues with the public, stakeholders and/or agencies.
N/A

F. Planning Assumptions and Analytical Methods

What is the forecast year used in the study? 2037

What method was used for forecasting traffic volumes?

Are the planning assumptions and the corridor vision/purpose and need statement consistent with the long range transportation plan?

What future year policy and/or data assumptions were used in the transportation planning process as they are related to land use, economic development, transportation costs and network expansion?

G. Potential Environmental Impacts

See the attached Stage 0 Environmental Checklist

H. Cost Estimate

Provide a cost estimate for each feasible alternative:

- Engineering Design: 300,000
- Additional Traffic Analyses: 0
- Environmental (document, mitigation, etc.): 0
- R/W Acquisition: (C of A if applicable) 100,000
- Utility Relocations: 100,000
- Construction (including const. traffic management): 3,672,260

TOTAL PROJECT COST **4,172,260**

F. Expected Funding Source(s) (Highway Priority Program, CMAQ, Urban Systems, Fed/State earmarks, etc.) _____

ATTACH ANY ADDITIONAL DOCUMENTATION

Disposition (circle one): (1) Advance to Stage 1 (2) Hold for Reconsideration (3) Shelve

STAGE 0
Environmental Checklist

Route LA 132 Parish: Richland

C.S. 842-13 Begin Log mile 0.07 End Log mile 0.28

ADJACENT LAND USE: Rural

Any property owned by a Native American Tribe?
(Y or N or Unknown) If so, which Tribe? Unknown

Any property enrolled into the Wetland Reserve Program?
(Y or N or Unknown) If so, give the location Unknown

Are there any other known wetlands in the area?
(Y or N) If so, give the location N

Community Elements: Is the project impacting or adjacent to any (if the answer is yes, list names and locations):
(Y or N) Cemeteries N
(Y or N) Churches N
(Y or N) Schools N
(Y or N) Public Facilities (i.e., fire station, library, etc.) Unknown
(Y or N) Community water well/supply N

Section 4(f) issue: Is the project impacting or adjacent to any (if the answer is yes, list names and locations):
(Y or N) Public recreation areas N
(Y or N) Public parks N
(Y or N) Wildlife Refuges N
(Y or N) Historic Sites Unknown

Is the project impacting, or adjacent to, a property listed on the National Register of Historic Places? (Y or N) **Is the project within a historic district or a national landmark district?** (Y or N) If the answer is yes to either question, list names and locations below:
unknown

Do <u>you know</u> of any threatened or endangered species in the area? (Y or N)
If so, list species and location. N

Does the project impact or adjacent to a stream protected by the Louisiana Scenic Rivers Act? (Y or N) If yes, name the stream. N

Are there any Significant Trees as defined by EDSM I.1.1.21 within proposed ROW? (Y or N) If so, where? unknown

What year was the existing bridge built? 1966

Are any waterways impacted by the project considered navigable? (Y or N) If unknown, state so, list the waterways: unknown

STAGE 0
Environmental Checklist

Hazardous Material: Have you checked the following DEQ and EPA databases for potential problems? (If the answer is yes, list names and locations.)

(Y or N) Leaking Underground Storage Tanks N
(Y or N) CERCLIS N
(Y or N) ERNS N
(Y or N) Enforcement and Compliance History N

Underground Storage Tanks (UST): Are there any Gasoline Stations or other facilities that may have UST on or adjacent to the project? (Y or N) unknown

If so, give the name and location: _____

Any chemical plants, refineries or landfills adjacent to the project? (Y or N) **Any large manufacturing facilities adjacent to the project?** (Y or N) **Dry Cleaners?** (Y or N) If yes to any, give names and locations: N

Oil/Gas wells: Have you checked DNR database for registered oil and gas wells? (Y or N) List the type and location of wells being impacted by the project. unknown

Are there any possible residential or commercial relocations/displacements? (Y or N)
How many? unknown

Do you know of any sensitive community or cultural issues related to the project? (Y or N)
If so, explain N

Is the project area population minority or low income? (Y or N) unknown

What type of detour/closures could be used on the job? The existing structure will be used during construction and the new bridge will be built adjacent to it. There are no predicted closures of the road.

Did you notice anything of environmental concern during your site/windshield survey of the area? If so, explain below.
N

Valerie Mautz
Point of Contact

(225) 379-1894
Phone Number

11/18/2011
Date

STAGE 0
Environmental Checklist

General Explanation:

To adequately consider projects in Stage 0, some consideration must be given to the human and natural environment which will be impacted by the project. The Environmental Checklist was designed knowing that some environmental issues may surface later in the process. This checklist was designed to obtain basic information, which is readily accessible by reviewing public databases and by visiting the site. It is recognized that some information may be more accessible than other information. Some items on the checklist may be more important than others depending on the type of project. It is recommended that the individual completing the checklist do their best to answer the questions accurately. Feel free to comment or write any explanatory comments at the end of the checklist.

The Databases:

To assist in gathering public information, the previous sheet includes web addresses for some of the databases that need to be consulted to complete the checklist. As of February 2011, these addresses were accurate.

Note that you will not have access to the location of any threatened or endangered (T&E) species. The web address lists only the threatened or endangered species in Louisiana by Parish. It will generally describe their habitat and other information. If you know of any species in the project area, please state so, but you will not be able to confirm it yourself. If you feel this may be an issue, please contact the Environmental Section. We have biologist on staff who can confirm the presence of a species.

Why is this information important?

Land Use? Indicator of biological issues such as T&E species or wetlands.

Tribal Land Ownership? Tells us whether coordination with tribal nations will be required.

WRP properties? Farmland that is converted back into wetlands. The Federal government has a permanent easement which cannot be expropriated by the State. Program is operated through the Natural Resources Conservation Service (formerly the Soil Conservation Service).

Community Elements? DOTD would like to limit adverse impacts to communities. Also, public facilities may be costly to relocate.

Section 4(f) issues? USDOT agencies are required by law to avoid certain properties, unless a prudent or feasible alternative is not available.

Historic Properties? Tells us if we have a Section 106 issue on the project. (Section 106 of the National Historic Preservation Act) See http://www.achp.gov/work106.html for more details.

Scenic Streams? Scenic streams require a permit and may require restricted construction activities.

Significant Trees? Need coordination and can be important to community.

Age of Bridge? Section 106 may apply. Bridges over 50 years old are evaluated to determine if they are eligible for the National Register of Historic Places.

Navigability? If navigable, will require an assessment of present and future navigation needs and US Coast Guard permit.

Hazardous Material? Don't want to purchase property if contaminated. Also, a safety issue for construction workers if right-of-way is contaminated.

Oil and Gas Wells? Expensive if project hits a well.

Relocations? Important to community. Real Estate costs can be substantial depending on location of project. Can result in organized opposition to a project.

Sensitive Issues? Identification of sensitive issues early greatly assists project team in designing public involvement plan.

Minority/Low Income Populations? Executive Order requires Federal Agencies to identify and address disproportionately high and adverse human health and environmental effects on minority or low income populations. (Often referred to as Environmental Justice)

Detours? The detour route may have as many or more impacts. Should be looked at with project. May be unacceptable to the public.

STAGE 0
Environmental Checklist

Louisiana Governor's Office of Indian Affairs:
http://www.indianaffairs.com/tribes.htm

Louisiana Wetlands Reserve Program:
http://www.nrcs.usda.gov/programs/wrp/states/la.html

Community Water Well/Supply
http://sonris.com/default.htm

Louisiana Department of Wildlife and Fisheries – Wildlife Refuges
http://www.wlf.louisiana.gov/refuges
http://www.fws.gov/refuges/profiles/ByState.cfm?state=LA
http://www.fws.gov/refuges/refugelocatormaps/Louisiana.html

U.S. Fish & Wildlife Service – National Wetlands Inventory:
http://www.fws.gov/wetlands/

Louisiana State Historic Sites:
http://www.crt.state.la.us/parks/ihistoricsiteslisting.aspx

National Register of Historic Places (Louisiana):
http://nrhp.focus.nps.gov/natreghome.do?searchtype=natreghome
http://www.nationalregisterofhistoricplaces.com/la/state.html

National Historic Landmarks Program:
http://www.nps.gov/history/nhl/

Threatened and Endangered Species Databases:
http://www.wlf.louisiana.gov/wildlife/louisiana-natural-heritage-program

Louisiana Scenic Rivers:
http://www.wlf.louisiana.gov/wildlife/scenic-rivers
http://media.wlf.state.la.us/experience/scenicrivers/louisiananaturalandscenicriversdescriptions/
http://www.legis.state.la.us/lss/lss.asp?doc=104995

Significant Tree Policy (EDSM I.1.1.21)
http://notes1/ppmemos.nsf
(Live Oak, Red Oak, White Oak, Magnolia or Cypress, aesthetically important, 18" or greater in diameter at breast height and has form that separates it from surrounding or that which may be considered historic.)

CERCLIS (Superfund Sites):
http://www.epa.gov/superfund/sites/cursites/
http://www.epa.gov/enviro/html/cerclis/cerclis_query.html

ERNS - Emergency Response Notification System - Database of oil and hazardous substances spill reports: http://www.epa.gov/region4/r4data/erns/index.htm

STAGE 0
Environmental Checklist

Enforcement & Compliance History (ECHO)
http://www.epa-echo.gov/echo/

DEQ – Underground Storage Tank Program Information:
http://www.deq.louisiana.gov/portal/tabid/2674/Default.aspx
Leaking Underground Storage Tanks:
http://www.deq.state.la.us/portal/tabid/79/Default.aspx

SONRIS – Oil and Gas Well Information & Water Well Information
http://sonris.com/default.htm

Environmental Justice (minority & low income)
http://www.fhwa.dot.gov/environment/ej2000.htm

Demographics
http://www.census.gov/

FHWA's Environmental Website
http://www.fhwa.dot.gov/environment/index.htm

Additional Databases Checked

_____

_____

_____

Other Comments:

_____

_____

_____

CHAPTER 5 – GENERAL BRIDGE DESIGN GUIDELINES

(Refer to current LADOTD Bridge Design Manuals including BDTMs for details)

CHAPTER 6 – DESIGN POLICY FOR BRIDGE REHABILITATION/REPAIR PROJECTS

TABLE OF CONTENTS

6.1—DEFINITION AND MINIMUM REQUIREMENTS 1
6.2—GUIDELINES FOR EXISTING STRUCTURE EVALUATION 1
6.2.1—Review of All Existing Project Documents 1
6.2.2—Field Investigation of the Existing Bridge 2
6.2.3—Evaluation of the Load-Carrying Capacity of the Existing Structures 3
6.2.4—Determination of Proposed Scope for Rehabilitation 4
6.2.5—Summary of the Evaluation Results and Recommendations 5
6.3—GUIDELINES FOR BRIDGE WIDENING DESIGN 6

6.1—DEFINITION AND MINIMUM REQUIREMENTS

A Bridge Rehabilitation/Repair project shall be defined as any bridge project in which the scope of work is to address deficiencies in an existing structure and/or to add functional capacity to an existing structure, such as bridge widening.

For rehabilitation/repair projects, an in-depth investigation of the condition of the existing structure shall be performed in accordance with the "Guidelines for Existing Structure Evaluation" established in this policy to identify all deficiencies and determine the scope of possible rehabilitation/repair. Design criteria for a rehabilitation/repair project shall be developed on a project-by-project basis depending on the given scope of work. Bridge widening design shall additionally follow the "Guidelines for Bridge Widening Design" established in this policy.

For repair-only projects, whose clearly defined scope of work is to restore damaged elements to a serviceable condition, the requirements of this BDTM may be waived with the approval of the Bridge Design Engineer Administrator.

The minimum requirements of a Bridge Rehabilitation/Repair project are as follows:

1. All deficiencies in the existing structure shall be identified and documented.
2. The existing structure shall be rehabilitated to improve the overall condition of the bridge to extend its service life and/or improve its bridge load rating as appropriate.

The minimum requirements for Bridge Widening projects shall include the following:

1. All deficiencies in the existing structure shall be identified and documented.
2. The existing structure shall be rehabilitated to improve the overall condition of the bridge to extend its service life and/or improve its bridge load rating as appropriate.
3. The widened portion of the structure shall be designed in accordance with the latest *AASHTO LRFD Bridge Design Specifications* and LADOTD Bridge Design Manuals including Bridge Design Technical Memoranda.
4. Existing bridge components, such as exterior girders, bent caps, columns, piles etc., that are subject to new loadings from the widening sections shall be evaluated based on the current specifications to determine their adequacy. Bridge components with insufficient capacity shall be replaced or rehabilitated as appropriate.

6.2—GUIDELINES FOR EXISTING STRUCTURE EVALUATION

For all bridge rehabilitation/repair projects, including bridge widening projects, an in-depth evaluation of the existing structure(s) shall be included in the scope of work. The evaluation shall be conducted in accordance with the guidelines listed below prior to proceeding with the design of the project.

6.2.1—Review of All Existing Project Documents

Review all relevant project information including as-built plans, shop drawings, rehabilitation work previously done to the structure, inspection reports, bridge load rating reports, accident records, maintenance records, geotechnical and test pile information, hydraulic analysis, scour information, and any other information pertaining to the structure(s).

6.2.2—Field Investigation of the Existing Bridge

Conduct an in-depth field investigation of the existing condition of the structure and obtain a clear understanding of the structure health and its serviceability. The investigation shall encompass all bridge elements and related site conditions including, but not limited to, the following:

- Decks, slabs, railings, and guardrails
- Girders and diaphragms
- Connections, joints, and bearings
- Approach slabs
- Abutments, wingwalls, bents, and exposed footings and piles
- Columns, column protection, and fender systems
- Revetments
- Mechanical and electrical systems
- Bridge drainage systems
- Scour, debris, and other hydraulic issues
- Roadway pavement growth and pavement relief joints
- Protective coatings
- Signs, ITS signage, and other items supported by the bridge
- Lighting
- Utilities
- All other miscellaneous items at the bridge site that may affect the rehabilitation/repair /widening, such as geometric issues, safety concerns, access restrictions, etc.

At a minimum, this field survey shall include the following actions:

a. Confirm that the available existing bridge plans (final plans, shop drawings, and as-built) agree with the actual field conditions for items such as:
    - Bridge location, bent location, skew angle, stationing, finished grade elevations, and vertical and horizontal clearances
    - Span lengths and widths, number and type of girders, railing type and deck drainage details
    - Abutment, wingwall, and bent details
    - Utilities, lighting, signs, ITS signage and any other items supported by the bridge
    - Any other features critical to the rehabilitation/repair/widening
    - Notify LADOTD of any discrepancies that are critical to the design.

b. For concrete members, document patches, spalls, exposure and corrosion of rebar and/or strands, delaminations, cracking, and any other damage, deterioration, and/or deficiencies. For prestressed concrete members, inspect and document signs of flexural and shear cracking.

c. For structural steel members, document the location and extent of all corrosion and loss of section, any fatigue prone details and fatigue cracking, the location and condition of cover plates with cutoffs or transitions, the condition of connection details and fasteners, the condition of protective coatings, and the possible presence of lead paint.

d. For substructures, conduct a visual survey of all abutments, pavement growth, joint closures, wing walls, bent caps and columns to determine any displacement and/or any deterioration that may require removal and replacement to reestablish the substructure stability. If substructure

rehabilitations appear necessary, evaluate locations and feasibility of providing temporary supports for the superstructure.

e. Evaluate the conditions of bearings and joints to determine if replacement or modifications are needed.

f. Evaluate the condition of the approach slab, abutment wall and approach slab connection, and relief joints. Inspect for settlement, voids under the slab, and any other structural deficiencies.

g. Note any issues with the existing hydraulics and consider any other issues that may be created by the widening.

6.2.3—Evaluation of the Load-Carrying Capacity of the Existing Structures

Provide LRFR current-condition bridge ratings for superstructures and pile bents (except piles/drilled shafts) in accordance with the latest edition of the AASHTO *Manual for Bridge Evaluation*, LADOTD *Policies and Guidelines for Bridge Rating and Evaluation*, and Bridge Design Technical Memoranda.

Substructure elements, such as piles/drilled shafts in pile bents, and caps, columns, footings and piles/drilled shafts in column bents, which do not have an LRFR rating policy in place, shall require a design analysis to determine the following:

- Live load capacity of the member based on existing configurations for each load effect (axial, shear and moment) which is defined as <u>Capacity</u>

  Capacity = Factored Member Resistance (ΦR_n) – γ_{DC} (DC) - γ_{DW} (DW)

- Live load demand for each load effect from HL-93 using Live Load Factor of 1.35 which is defined as <u>HL-93 Operating Demand</u>

  HL-93 Operating Demand = 1.35 ($LL_{HL\text{-}93}$)

- Live load demand for each load effect from HL-93 using Live Load Factor of 1.75 which is defined as <u>HL-93 Inventory Demand</u>

  HL-93 Inventory Demand = 1.75 ($LL_{HL\text{-}93}$)

- Live load demand for each load effect from LADV-11 using Live Load Factor of 1.75 which is defined as <u>LADV-11 Inventory Demand.</u>

  LADV-11 Inventory Demand = 1.75 ($LL_{LADV\text{-}11}$)

6.2.4—Determination of Proposed Scope for Rehabilitation

Based on the evaluation results from 6.2.1 to 6.2.3, determine a proposed scope of the rehabilitation/repair using the evaluation matrix below. This scope of work should also take into account the cost of rehabilitating the deficiencies as well as site-specific conditions such as ease of access and traffic accommodation during construction.

<table>
<tr><th colspan="3">For Superstructures and Pile Bents (Except Piles/Drilled Shafts)</th></tr>
<tr><th colspan="2">Evaluation Criteria</th><th>Minimum Scope</th></tr>
<tr><td colspan="2">Structures with an Inventory rating for HL-93 < 0.9, low remaining service life (based on structure age), major deterioration and/or deficiencies</td><td>First consider replacement by performing a preliminary cost comparison* of rehabilitation vs. replacement. If rehabilitation is selected, strengthen to bring the HL-93 inventory rating ≥ 0.9; address possible rehabilitation of any other identified deficiencies</td></tr>
<tr><td rowspan="3">All other structures with Inventory rating for HL-93 < 0.9</td><td>NHS routes and routes where posting of bridges is not practical</td><td>Perform a preliminary cost comparison* of rehabilitation vs. replacement. If rehabilitation is selected, strengthen the bridge to bring the HL-93 inventory rating ≥ 0.9 and address possible rehabilitation of all other identified deficiencies</td></tr>
<tr><td rowspan="2">Routes where posting of bridges is practical</td><td>Perform a preliminary cost comparison* of rehabilitation vs. replacement. If it is financially feasible, strengthen the bridge to bring the HL-93 inventory rating ≥ 0.9 and address possible rehabilitation of any other identified deficiencies.</td></tr>
<tr><td>If it is not financially feasible (due to a lack of funding) to bring the HL-93 inventory rating ≥ 0.9, request an exemption from the Bridge Design Engineer Administrator for strengthening these elements, post the bridge, and address possible rehabilitation of any other identified deficiencies.</td></tr>
<tr><td colspan="2">Inventory rating for HL-93 ≥ 0.9</td><td>Address possible rehabilitation of any identified deficiencies</td></tr>
</table>

* The preliminary cost comparison shall take into account all costs associated with the rehabilitation or replacement beyond the structure cost alone, e.g., construction phasing, maintenance of traffic, and life-cycle costs. Refer to NCHRP Report 483 or any other pertinent references for general guidance on calculating bridge life-cycle costs.

For Piles/Drilled Shafts in Pile Bents **For Caps, Columns, Footings and Piles/Drilled Shafts in Column Bents**		
Evaluation Criteria		**Minimum Scope**
Structures with (Capacity/ HL-93 Inventory Demand) < 0.9, low remaining service life (based on structure age), signs of moment or shear cracks, major deterioration and/or deficiencies		First consider replacement by performing preliminary cost comparison* of rehabilitation vs. replacement. If rehabilitation is selected, strengthen to bring the ratio of Capacity/ HL-93 Inventory Demand ≥ 0.9; address possible rehabilitation of any other identified deficiencies
All other structures with (Capacity/ HL-93 Inventory Demand) < 0.9	NHS routes and routes where posting of bridges is not practical	Perform a preliminary cost comparison* of rehabilitation vs. replacement. If it is financially feasible, strengthen the bridge to bring the Capacity/ HL-93 Inventory Demand ≥ 0.9 and address possible rehabilitation of all other identified deficiencies
	Routes where posting of bridges is practical	If it is not financially feasible (due to lack of funding) to bring the HL-93 Inventory Demand ≥ 0.9, request an exemption from the Bridge Design Engineer Administrator for strengthening these elements, post the bridge, and address possible rehabilitation of any other identified deficiencies.
(Capacity/HL-93 Inventory Demand) ≥ 0.9		Address possible rehabilitation of any identified deficiencies.

* The preliminary cost comparison shall take into account all costs associated with the rehabilitation or replacement beyond the structure cost alone, e.g., construction phasing, maintenance of traffic, and life-cycle costs. Refer to NCHRP Report 483 or any other pertinent references for general guidance on calculating bridge life-cycle costs.

6.2.5—Summary of the Evaluation Results and Recommendations

Prepare a bridge evaluation report that summarizes the results of 6.2.1 to 6.2.4 for each structure and provides recommendations for a scope of work that addresses all identified deficiencies. The report shall include, but is not limited to, the following information:

- A summary of all identified deficiencies, including all supporting documents, such as as-built plans, field inspection notes and photos
- A summary of bridge rating and design analysis results
- Clear recommendations for either rehabilitation/repair or replacement with justifications
- Scope of work and justifications for all identified deficiencies if rehabilitation/repair is recommended

The bridge evaluation report shall be stamped by an Engineer of Record who possesses a professional engineering license in Civil Engineering in the State of Louisiana. For consultant projects, the report shall be submitted to DOTD for review and final decision regarding the recommended scope.

6.3—GUIDELINES FOR BRIDGE WIDENING DESIGN

For the design of widened bridge sections, adhere to the following criteria:

1. Design all new bridge components in accordance with the latest *AASHTO LRFD Bridge Design Specifications* and LADOTD Bridge Design Manuals including all Bridge Design Technical Memoranda.
2. Existing bridge components that are subject to new loadings from the widening sections shall be evaluated based on the aforementioned specifications to determine their adequacy and shall be replaced or rehabilitated as required and appropriate.
3. The new sections of the structure shall use similar superstructure type and depth as the existing structure. Avoid mixing concrete and steel girders in the same span. The new main load carrying members shall be proportioned and/or positioned to provide similar longitudinal and transverse load distribution characteristics as the existing structure. To ensure uniform stiffness over the entire cross section of the final widened section, the difference in live load deflection between a new girder and an existing girder should be within 10% if possible.
4. A closure pour (with a recommended width of 30 inches) should be used between the existing and new decks. This will allow the substructure of the widened portion to settle before connecting the structures. The bridge plans shall include a note indicating the required waiting period between deck and closure concrete placement.
5. The transverse reinforcement in the new deck should be spaced to match the existing transverse spacing when possible. Different bar size or additional intermediate bars may be used if required by design.
6. When designing and detailing connections between the existing and new structure components, take into account the difference in elevation due to camber or other construction tolerances that will be present prior to placing the new deck.
7. New and existing pile bents should typically be tied together; however, tying new column bent to existing column bent is undesirable due to potential differential foundation settlements. It may be allowed provided there is no adverse effect to the existing substructure.
8. If the existing bridge does not satisfy the current vertical clearance requirements and if the economics of increasing the existing vertical clearance is justified, the superstructure shall be elevated and/or the under-passing roadway shall be lowered to meet the new requirement. The vertical clearance under the widened portion of the bridge shall not be less than current clearance requirements or the existing vertical clearance, whichever is lower.
9. All existing columns that are not designed for lateral impact forces shall be protected in accordance with *AASHTO LRFD Bridge Design Specifications.*
10. All new bridge railings shall meet NCHRP 350 or MASH TL-4. Concrete F-shape barriers are preferred, but other bridge railing types may be allowed with the approval of the Bridge Design Engineer Administrator. Existing bridge railings that do not meet NCHRP 350 or MASH TL-4 shall be replaced.
11. All new guardrails shall meet the current standards. All existing guardrails that do not meet current standards shall be replaced.
12. The cross slope of the widened deck shall match the existing cross slope.
13. Open longitudinal joints in the riding surface shall be avoided. If longitudinal joints are unavoidable, submit the justification and proposed joint details to the Bridge Design Engineer Administrator for approval.
14. The new bearings shall match the existing bearings in terms of fixity. When replacing existing bearings, use the same bearing type for all girders.

15. End diaphragms between new and existing girders shall be provided. For widening sections adding only one girder, at least one intermediate diaphragm shall be provided in addition to the end diaphragms, regardless of span length. When adding two or more new girders, intermediate diaphragms are not required between the new and existing sections.
16. Suggested construction sequence details shall be shown on the preliminary bridge plans for all projects utilizing phased construction. The final plans shall include the complete suggested construction sequence.
17. Any existing lighting system shall be evaluated for adequacy for the final widened bridge.
18. The possible impact of nearby utilities, structures, facilities, or other significant obstructions to the widening shall be evaluated.

CHAPTER 7 – PROJECT DELIVERY

(Follow LADOTD Project Delivery Manual)

CHAPTER 8 – PLAN PREPARATION

(Refer to current Bridge Design Manuals including BDTMs for details)

CHAPTER 9 – STANDARD PLANS AND SPECIAL DETAILS

TABLE OF CONTENTS

9.1—DEFINITIONS 1
9.2—STANDARDS DEVELOPMENT PROCESS/CHECKLIST 1
9.3—DISTRIBUTION POLICY 2
9.3.1—Hard Copies 2
9.3.2—PDF Files 2
9.3.3—Raster Files 2
9.3.4—Vector/CAD Files 3
9.3.5—Historical/Old Standards 3
9.4—INDEX OF THE STANDARDS 3

LIST OF TABLES

Bridge Standards Index Table 4

9.1—DEFINITIONS

Bridge Standards — A general term referring to both Bridge Standard Plans and Bridge Special Details.

Bridge Standard Plans — Plan drawings that are standardized for use on any applicable project, have been stamped by a DOTD bridge design engineer of record and signed by the DOTD Chief Engineer.

Bridge Special Details — Plan drawings that are standardized for use on any applicable project and have been stamped by a DOTD bridge design engineer of record. Special Details do not require signature by the DOTD Chief Engineer.

DOTD Project — A project that has a DOTD project number.

EOR — The Engineer of Record for the relevant Bridge Standard.

Non-DOTD Project — A project that does not have a DOTD project number.

Standards Manager — The designated DOTD bridge design engineer responsible for the oversight and management of the Bridge Standards.

9.2—STANDARDS DEVELOPMENT PROCESS/CHECKLIST

All Bridge Standards shall be developed in accordance with the Bridge Design Section QC/QA Policy and as follows:

Step 1: The EOR completes and submits the online request form on the Bridge Design website. The request should include a brief description of the need to create new, or modify existing, Bridge Standards.

Step 2: The Standards Manager receives the request and logs it into the Standards Log Sheet, which is maintained by the Standards Manager.

Step 3: The Standards Manager schedules and conducts a meeting with the EOR, the EOR's direct supervisor, the Assistant Bridge Design Administrator in charge of Standards, and the Bridge Design Engineer Administrator to discuss the request and to obtain approval to proceed from the Bridge Design Engineer Administrator. The Standards development process should be reviewed at the meeting to familiarize everyone involved of all the requirements.

Step 4: The Standards Manager (or a designated person) places the requested CAD Vector files in a designated ProjectWise folder where the files can be modified by the EOR. The modification of Bridge Standards vector files in any other folders or outside of ProjectWise is strictly prohibited.

Step 5: The EOR develops the Standards in accordance with QC/QA Policy and emails a PDF copy of the Standards to the Standards Manager when they are complete.

Step 6: The Standards Manager distributes the Standards for comments via email. The distribution list shall include the following:

- Bridge Design Engineer Administrator
- Assistant Bridge Design Administrators
- Administrators of other DOTD Sections affected by the Standards being developed

Assistant Bridge Design Administrators may delegate the review to a senior engineer under their charge.

Step 7: The EOR addresses all comments received and schedules a meeting with the reviewer to discuss the comments, if necessary. If an agreement cannot be reached between the EOR and the reviewer, the Bridge Design Engineer Administrator shall be involved to make the final decision. The EOR emails a PDF of the revised Standards to the Standards Manager.

Step 8: The Standards Manager distributes the revised Standards for comments as in Step 6. This process is repeated until all issues have been resolved.

Step 9: The EOR prints the final revised Bridge Standards on full-sized sheets, stamps and signs them.

Step 10: For Standard Plans, the EOR shall follow the additional procedures listed in EDSM No. I.1.1.2.

Step 11: The EOR scans the signed Bridge Standards and creates CAD raster files in the "Development" folder. The EOR fills in the file attributes in Projectwise for the CAD vector and raster files.

Step 12: The Standards Manager prepares a draft BDTM for the publication of the Standards. BDTM publication shall be in accordance with the BDTM Development Process in P1.2, beginning with Step 4 and excluding Step 6.

Step 13: The Standards Manager (or a designated person) archives the vector and raster files that are to be replaced by the new Bridge Standards. The archived file shall be renamed using the existing filename followed with the last revision date in yyyy-mm-dd format. The file shall be stamped “VOID” and saved under the “Archive” folder.

Step 14: The Standards Manager (or a designated person) moves the new CAD vector files and raster files from the “Development” folder to the “Vector” and “Raster” folders respectively.

Step 15: The Standards Manager (or a designated person) generates a PDF file of the raster version of the Standards, adding an electronic stamp marking them "For Informational Purposes Only" and fills in the file attributes in ProjectWise. The PDF files shall then be placed into the appropriate ProjectWise folder under "Public Access".

Step 16: The EOR shall submit final calculations, rating reports, and any other final design documents and files to the Standards Manager no later than 30 calendar days after the publication of the Bridge Standards. These documents shall be placed in the "Calculations for Standard Plans-Special Details" folder in ProjectWise.

Step 17: The Standards Manager updates the Standards Master Sheet and Standards Log Sheet and notifies the DOTD Plans Manager that the Bridge Standards have been updated.

9.3—DISTRIBUTION POLICY

9.3.1—Hard Copies

Hard copies of all Bridge Standards are available for public access through DOTD General Files and Legal Section.

9.3.2—PDF Files

PDF files of the latest Bridge Standards watermarked with "For Informational Purposes Only" are published in ProjectWise and on the DOTD website for public access. These PDF files should be used in plan sets prior to the 90% final plan stage. PDF files without the "For Informational Purposes Only" watermark shall not be distributed.

9.3.3—Raster Files

Raster files will be distributed for inclusion in final plan sets for DOTD and non-DOTD projects and no modifications on the details are allowed.

For DOTD projects at 90% final plan stage, an online request for Bridge Standards shall be made to ensure that the latest revisions are used. The request form is posted on the Bridge Design website under

Bridge Standards and the raster files will be distributed through the ProjectWise system only. All consultants working on DOTD projects shall have a designated folder in ProjectWise in order to receive the requested files.

For non-DOTD projects, a "Public Records Request Form for Standard Plans and Special Details" and a "Hold Harmless Agreement for Standard Plans and Special Details" shall be completed and submitted to the DOTD Plans Manager. Both forms are posted on the DOTD website.

9.3.4—Vector/CAD Files

Vector CAD files shall only be distributed to Bridge Design staff or to consultants working on DOTD projects. These files shall only be distributed for detail utilization and the savings from their use should be reflected in the consultant man-hour estimate. The consultant assumes full responsibility for the design and detailing of the new sheet.

9.3.5—Historical/Old Standards

Historical or archived Bridge Standards are maintained in ProjectWise and are accessible by Bridge Design staff or through public records requests only.

9.4—INDEX OF THE STANDARDS

All Bridge Standards sheets are assigned a unique index number starting with prefix “BD” and followed by five numbers as shown in the Bridge Standards Index Table and the example. The Standards Master List contains a list of all current Bridge Standards and is updated by the Standards Manager. An index of all published Bridge Standards is posted on the Bridge Design website.

Bridge Standards Index Table

Prefix	1st Number	2nd Number	3rd Number	4th Number	5th Number
BD	Type of the Standards 1 = Standard Plan 2 = Special Detail	Main Categories in Each Standard Type Standard Plans 1 = Guard Rail 2 = Miscellaneous Special Details 1 = Slab Spans 2 = Precast Prestressed Concrete Girders (P.P.C. Girders) 3 = Steel Girders 4 = Misc. Span Details 5 = Piles 6 = Bridge Railing, Barrier, and Guard Rail 7 = Signing and Lighting Support 8 = Detour Bridge 9 = Bridge Maintenance 10 = Approach Slabs 11 = Miscellaneous	Sub-Category 1 in Each Main Category (if needed)	Sub-Category 2 in each Sub-Category 1 (if needed)	Sheet Number

Example: BD.2.6.1.2.01

Sheet No.1

32” F-Shape

Special Detail

Bridge Railing

Bridge Railing/Barrier/Guard Rail

CHAPTER 10 – CONSULTANT CONTRACTING

(Refer to LADOTD Consultant Contract Services Website for details)

PART II

DESIGN SPECIFICATIONS

Volume 1 – Bridge Design

CHAPTER 1 – INTRODUCTION

TABLE OF CONTENTS

1.1—SCOPE OF THE SPECIFICATIONS 1
1.2—DEFINITIONS 1
1.3—DESIGN PHILOSOPHY 2
1.3.3—Ductility 2
1.3.4—Redundancy 2
1.3.5—Operational Importance 3
1.4—REFERENCES 3

LIST OF FIGURES

Typical Column Bent 1
Typical Pile/Drilled Shaft Bent 2

1.1—SCOPE OF THE SPECIFICATIONS

The following shall supplement *A1.1*.

Bridges vulnerable to coastal storms shall be designed with the provisions in these specifications and those given in AASHTO *Guide Specifications for Bridges Vulnerable to Coastal Storms*.

Bridges located in the Parishes of Calcasieu, Cameron, Iberia, Jefferson, Lafourche, Orleans, Plaquemines, St. Bernard, St. Charles, St. John the Baptist, St. Mary, St. Tammany, Tangipahoa, Terrebonne, and Vermilion must be investigated for their vulnerability to coastal storms. Designers shall study FEMA *Insurance Studies and Flood Insurance Maps* to determine if the bridge sites are located in Zone V or VE. Zones V and VE are defined by FEMA as the areas of 100-year coastal flood with velocity (wave action). All bridges located in Zone V or VE are considered as vulnerable to coastal storms.

Construction specifications shall be the latest edition of *Louisiana Standard Specifications for Roads and Bridges (Standard Specifications)*. The *Standard Specifications* is subject to amendment whenever necessary by supplemental specifications and special provisions to specific contracts. In the absence of specific information in the *Standard Specifications*, follow the latest edition of *AASHTO LRFD Bridge Construction Specifications*.

1.2—DEFINITIONS

The following shall supplement *A1.2*.

Bridge Design Engineer Administrator—The administrator of LADOTD Bridge Design Section.

Column Bent—Generally consists of a concrete cap supported by one or more columns. The columns are generally supported by pile or drilled shaft-supported footings or directly supported by drilled shafts.

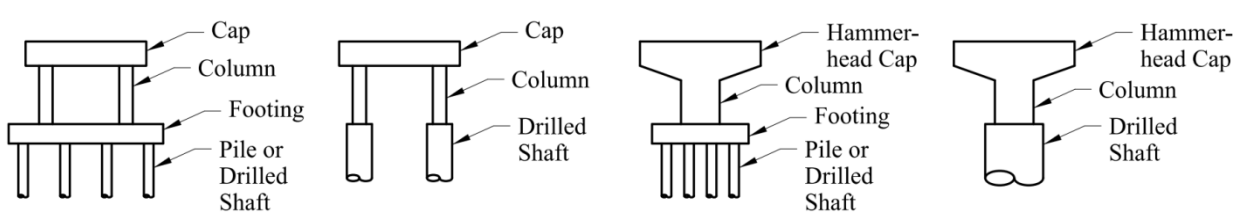

Typical Column Bent

Pier—Pier and column bent are interchangeable terms. A pier is typically a column bent located in a navigational channel that may be constructed by cofferdam, caisson, or other methods.

Pile/Drilled Shaft Bent —Generally consists of a concrete cap supported by piles or drilled shafts.

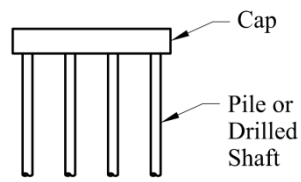

Typical Pile/Drilled Shaft Bent

Standard Specifications—The latest edition of *Louisiana Standard Specifications for Roads and Bridges*.

Straddle Bent—Consists of a long crossbeam extending well beyond the bridge footprint and is supported by a column on either side of the roadway or other straddled features.

1.3—DESIGN PHILOSOPHY

1.3.3—Ductility

The following shall replace the third and fourth paragraphs of *A1.3.3*.

For all bridges, the ductility load modifier, η_D shall be taken as 1.00.

1.3.4—Redundancy

The following shall replace the second and third paragraphs of *A1.3.4*.

For all bridges, the redundancy load modifier, η_R shall be taken as 1.00 except for the following cases:

All girders in bridge spans with three or less girders $\eta_R = 1.10$

All components in arch bridge spans $\eta_R = 1.10$

Floor beams with spacing > 12 feet $\eta_R = 1.10$

All components in steel straddle bents $\eta_R = 1.10$

All components in pile/drilled shaft bents with 3 piles/drilled shafts or less $\eta_R = 1.05$

All components in column bents or piers with 2 columns or less $\eta_R = 1.05$

Truss bridges employing only two trusses are not allowed.

Two-girder systems are only allowed for

movable bridges.

1.3.5—Operational Importance

The following shall replace the third and fourth paragraphs of *A1.3.5*.

For all bridges, the Operational Importance Factor, η_I, shall be taken as 1.00.

The Bridge Design Engineer Administrator may, on a case-by-case basis, specify a higher value for bridges deemed of high operational importance and critical to the survival of major communities.

1.4—REFERENCES

AASHTO LRFD Bridge Construction Specification, Latest Edition, American Association of State Highway and Transportation Officials, Washington, DC.

AASHTO Guide Specifications for Bridges Vulnerable to Coastal Storms, Latest Edition, American Association of State Highway and Transportation Officials, Washington, DC.

Louisiana Standard Specifications for Roads and Bridges, Latest Edition, State of Louisiana Department of Transportation and Development, Baton Rouge, LA.

CHAPTER 2 – GENERAL DESIGN AND LOCATION FEATURES

TABLE OF CONTENTS

2.2—DEFINITIONS 1
2.3—LOCATION FEATURES 1
2.3.1—Route Location 1
2.3.1.2—Waterway and Floodplain Crossings 1
2.3.2—Bridge Site Arrangement 1
2.3.2.2—Traffic Safety 1
2.3.2.2.1—Protection of Structures 1
2.3.2.2.2—Protection of Users 2
2.3.2.2.3—Geometric Standards 2
2.3.2.2.4—Road Surfaces 3
2.3.2.2.5—Vessel Collisions 3
2.3.3—Clearances 4
2.3.3.1—Navigational 4
2.3.3.2—Highway Vertical 4
2.3.3.3—Highway Horizontal 5
2.3.3.4—Railroad Overpass 6
2.3.4—Environment 6
2.5—DESIGN OBJECTIVES 7
2.5.1—Safety 7
2.5.2—Serviceability 7
2.5.2.1—Durability 7
2.5.2.1.1—Materials 7
2.5.2.1.2—Self-protecting Measures 7
2.5.2.2—Inspectability 8
2.5.2.3—Maintainability 9
2.5.2.4—Rideability 10
2.5.2.5—Utilities 11
2.5.2.6—Deformations 11
2.5.2.6.1—General 11
2.5.2.6.2—Criteria for Deflection 12
2.5.2.6.3—Optional Criteria for Span-to-Depth Ratios 12

2.5.2.7—Consideration of Future Widening....12
2.5.2.7.1—Exterior Beams on Multi-beam Bridges....12
2.5.2.7.2—Substructure....12
2.5.3—Constructability....13
2.5.4—Economy....13
2.5.4.2—Alternative Plans....13
2.5.5—Bridge Aesthetics....13
2.6—HYDROLOGY AND HYDRAULICS....14
2.6.6—Roadway Drainage....14
2.6.6.3—Type, Size, and Number of Drains....14
2.6.6.4—Discharge From Deck Drains....14
2.7—BRIDGE SECURITY....15
2.8—REFERENCES....15

2.2—DEFINITIONS

The following shall supplement *A2.2*.

BDEM—LADOTD Bridge Design and Evaluation Manual.

BDSD—Bridge Design Special Details stamped by an LADOTD Bridge Design Section Engineer of Record (EOR).

Chief Engineer—The chief of LADOTD Office of Engineering.

Design Speed—A selected speed used to determine the various design features of the roadway. The design speed for each roadway classification is defined in LADOTD Minimum Design Guidelines approved by Chief Engineer. These guidelines can be found in Bridge Design Section website under downloads.

EDSM—LADOTD Engineering Directives and Standards Manual. This manual is posted on LADOTD website.

EOR (Engineer of Record)—The Professional Engineer registered in the State of Louisiana in responsible charge (direct control and personal supervision) of the work. The EOR may be LADOTD in-house staff or a consultant retained by the Department.

Permit Coordinator—The person who is responsible for securing permits (except for the railroad permit) required for LADOTD projects.

Railroad Permit Coordinator—The person who is responsible for securing the railroad permit agreement from railroad companies for LADOTD projects.

Standard Plans—Plans approved by the Chief Engineer and stamped by an EOR in LADOTD Bridge Design Section.

2.3—LOCATION FEATURES

2.3.1—Route Location

2.3.1.2—Waterway and Floodplain Crossings

The following shall supplement *A2.3.1.2*.

Refer to LADOTD Hydraulics Manual, which is posted on LADOTD website, for the Department's hydraulic design policies. Where conflict exists between AASHTO provisions and the Hydraulic Manual, LADOTD Hydraulic Design Unit should be contacted to resolve differences.

2.3.2—Bridge Site Arrangement

2.3.2.2—Traffic Safety

2.3.2.2.1—Protection of Structures

The following shall supplement *A2.3.2.2.1*.

Refer to *LADOTD Guard Rail Standard Plans, EDSM II.3.1.3—Guard Rail, EDSM II.3.1.4—Guardrail, Other Bridge Rail End Treatment, Curbs and Sidewalks on Urban Bridges, and BDEM Part II, Volume 4, "Highway Safety"* for current LADOTD minimum requirements.

Refer to *A3.6.5.1* for additional requirements on the protection of structures for vehicle and railway collision.

2.3.2.2.2—Protection of Users

The following shall replace the last paragraph of *A2.3.2.2.2.*

For bridges in urban areas with design speed of 45 mph or less, refer to *EDSM II.3.1.4—Guardrail, Other Bridge Rail End Treatment, Curbs and Sidewalks on Urban Bridges, EDSM II.2.1.7—Curb Policy, EDSM II.2.1.10—Requirements for Construction of Pedestrian Sidewalk Facilities, and EDSM IV.3.1.3—Sidewalks in Highway Rights-of-Way by Permit.*

For bridges with design speed greater than 45 mph, refer to *EDSM II.2.1.7—Curb Policy*. When sidewalks are used for applications with design speed greater than 45mph, a crash- tested bridge railing shall be used to separate pedestrians from vehicular traffic, along with a required pedestrian railing as per *A13*. The bridge railing test level shall be approved by the Bridge Design Engineer Administrator, but in all cases shall not be less than level TL-4 (*NCHRP 350* or *MASH*).

Sidewalks for pedestrian and bicycle use shall be designed in accordance with the latest edition of *ADA Standards for Accessible Design, Life Safety Code,* and AASHTO *Guide for the Development of Bicycle Facilities*. The minimum clear width (completely free of obstacles and protruding objects) shall be 5'-0" for pedestrian sidewalk and 6'-0" for the combination of pedestrian and bicycle sidewalk.

For movable bridges, refer to the latest *AASHTO LRFD Movable Highway Bridge Design Specifications* and *BDEM Part II, Volume 2, Movable Bridge Design* for corresponding safety design requirements.

2.3.2.2.3—Geometric Standards

The following shall supplement *A2.3.2.2.3*.

LADOTD Minimum Design Guidelines, approved by Chief Engineer, defines the critical design elements for each functional system of the roadway; the minimum requirements in the guidelines shall be met unless otherwise stated herein. The use of a value less than the minimum specified in the guidelines will require a design exception. The design exception shall be approved by the Chief Engineer and documented in the project design criteria. These guidelines can be downloaded from LADOTD Bridge Design Section website under "Downloads".

Refer to *EDSM II.1.1.1—Right-of-Way Widths* for LADOTD minimum right-of-way widths.

Refer to *EDSM II.3.1.2—Stopping Sight Distance on Curve Bridge* for stopping sight distance requirements on curve bridges.

2.3.2.2.4—Road Surfaces

The following shall supplement *A2.3.2.2.4*.

One-way traffic bridges shall have a single tangent with minimum slope of 2.5%. Two-way traffic bridges shall have a two-way tangent with a minimum slope of 2.5% connected by a 4'-0" parabolic crown. Bridge deck crowns shall match connecting roadway crown except for special cases.

Refer to *Standard Specifications* for the requirements on bridge deck finishing.

Pavement surface drainage in superelevation transition must be investigated. Minimum profile grades within the transition shall be provided in accordance with Chapter 3, Minimum Transition Grades, in AASHTO *A Policy on Geometric Design of Highways and Streets.*

2.3.2.2.5—Vessel Collisions

The following shall supplement *A2.3.2.2.5*.

Fixed bridges shall be designed for vessel collision forces in accordance with *A3.14*. Pier protection systems are not required except for existing bridge rehabilitations where it is not feasible to rehabilitate the existing bridge for vessel collision forces. Pier protection may also be required by the Coast Guard to prevent fire in case of impact.

Movable bridges shall be protected with pier protection systems unless the bridge is designed for vessel collision forces in accordance with *A3.14* and the mechanical and electrical equipment is designed

to accommodate corresponding displacements. Exceptions must be approved by the Bridge Design Engineer Administrator.

2.3.3—Clearances

2.3.3.1—Navigational

The following shall supplement *A2.3.3.1*.

The U.S. Coast Guard is the sole authority in approving the requirements for horizontal clearance, vertical clearance and navigational lights. Visit the U.S. Coast Guard Bridge Administration Division website for general information. Refer to *U.S. Coast Guard Bridge Permit Application Guide*, *Bridge Guide Clearances*, and *Bridge Lighting Manual* for specific requirements when preparing the permit application and plans. The Permit Coordinator is responsible for securing the Coast Guard Permit. Once the permit is obtained, modifications cannot be made without additional Coast Guard review.

The vertical clearance over water is the minimum distance between the low chord of the superstructure and the specified water level within the channel width, between piers, or between fenders as applicable. The specified water level may be "High Water" (HW), Mean High Water (MHW), Mean Low Water (MLW), "Mean Sea Level" (MSL), "Normal Pool Elevation", "100-Year Flood", or "2% Flow Line". The definitions of the water levels can be found in the Bridge Permits section of the U.S. Coast Guard website. The water elevations shall be determined by the Hydraulic Engineer. The horizontal clearance is the minimum clear distance (completely free of obstacles and protruding objects) between piers, or between fenders, as applicable. Sample bridge permit application plans can be found in the Bridge Permits section of the U.S. Coast Guard website.

2.3.3.2—Highway Vertical

The following shall replace *A2.3.3.2*.

Minimum vertical clearances for structures are as follows:

Freeway, arterials and all other roads and streets (underpass and overpass)	16.5 ft.
Truss portals	17.5 ft.
Pedestrian bridges	20.0 ft.

Other structures	20.0 ft.
Trails/Bikeways (underpass)	12.0 ft.

The above values account for up to 6 inches of future overlay.

The vertical clearance shall be maintained throughout the horizontal clear zone under the bridge as defined in *D2.3.3.3*. In the design process, consideration should be given to possible future widening of the roadway under the structure and the possible future widening of the structure itself.

For prestressed concrete beams, any beam camber shall be disregarded when determining actual vertical clearance, unless the beam is cast or assembled specifically to provide vertical curvature at the bottom of the beam.

For minimum vertical clearance for traffic signs, refer to BDSD for traffic signs and the latest edition of *AASHTO Standard Specifications* for Structural Supports for Highway Signs, Luminaires, and Traffic Signals.

For minimum vertical clearance for lighting, refer to the latest edition of LADOTD *A Guide to Constructing, Operating, and Maintaining Highway Lighting System*, which is posted on LADOTD website.

2.3.3.3—Highway Horizontal

The following shall supplement *A2.3.3.3*.

The bridge width shall be in accordance with LADOTD Minimum Design Guidelines unless the Chief Engineer approves an exception. It is preferable for the bridge width to match the approach roadway width. In some cases, such as long structures where approach roadway shoulder width is narrow, it is desirable to provide wider bridge shoulder width than approach roadway shoulder width.

The horizontal clear zone distance under the bridge is defined as the clear horizontal distance from the edge of travel lane to the edge of nearest object. Refer to AASHTO *Roadside Design Guide* for guidance on horizontal clear zone distance. The horizontal clear zone distance shall also meet the requirements of *A2.3.2.2.1*, *D2.3.2.2.1*, *A2.3.2.2.3*, and *D2.3.2.2.3*.

For horizontal clear zone distance for traffic signs, refer to BDSD for traffic signs and the latest

edition of *AASHTO Standard Specifications* for Structural Supports for Highway Signs, Luminaires, and Traffic Signals.

For horizontal clear zone distance for lighting, refer to the latest edition of LADOTD *A Guide to Constructing, Operating, and Maintaining Highway Lighting System*, which is posted on LADOTD website.

2.3.3.4—Railroad Overpass

The following shall supplement *A2.3.3.4*.

The vertical clearance for a railroad overpass shall be the minimum distance between the low chord of the overpass superstructure (including live load deflection) and the highest rail within the horizontal clearance window specified by the railroad owner. The amount of vertical clearance provided shall be the stated vertical clearance provided by the railroad owner plus 6 inches. This is to account for future adjustments to either the road or railroad and to allow for construction tolerances. Minimum vertical clearance shall be shown on the plans as specified by the railroad owner.

The horizontal clearance for a railroad overpass is typically measured as the minimum distance between the centerline of the nearest track to the face of the pier. Minimum horizontal clearance shall be shown on plans as specified by the railroad owner.

Pier protection shall be provided as specified by the railroad owner and AASHTO specifications. Refer to *A3.6.5* for the protection of structures for railway collision forces.

Proper drainage of the structure must be considered during the layout and design process to avoid impact on the railroad right-of-way.

Railroad Permit Coordinator is responsible for securing the railroad permit agreement. Designers should work closely with the Coordinator while preparing railroad permit agreement applications. Planning and communication with railroad should begin at preliminary design stage while determining structure type, size, and locations (T, S, & L).

2.3.4—Environment

The following shall supplement *A2.3.4*.

Refer to LADOTD *Environmental Manual of Standard Practice* for LADOTD environmental

policy and guidance on LADOTD environmental process. This manual is posted on the LADOTD website. LADOTD Environmental Section is responsible for preparing the environmental decision documents and determining the type of permit required for each project. Permit Coordinator in the Environmental Section is responsible for securing all environmental permits. A list of permits and approvals are included in the *Environmental Manual of Standard Practice*. The Bridge Designer should work closely with the Permit Coordinator while preparing permit applications.

2.5—DESIGN OBJECTIVES

2.5.1—Safety

The following shall supplement *A2.5.1*.

Refer to *BDEM, Part I, Chapter 3* for LADOTD Bridge Design Section Policy on QC/QA.

2.5.2—Serviceability

2.5.2.1—Durability

2.5.2.1.1—Materials

The following shall supplement *A2.5.2.1.1*.

Refer to *Standard Specifications* for material specifications.

Refer to *BDEM, Part I, Chapter 2—Bridge Design Committees* for new material approval process. Implementation of new materials or products must be approved by the Bridge Design Specification Committee.

Refer to LADOTD *Qualified Products List* (QPL) for approved materials.

Refer to LADOTD *Materials Sampling Manual* for the material sampling standards and acceptance requirements.

All above references are posted on LADOTD website.

2.5.2.1.2—Self-protecting Measures

The following shall replace the first paragraph of *A2.5.2.1.2*.

Continuous drip grooves or drip beads shall be provided along underside of a concrete deck at a

C2.5.2.1.2

The following shall replace the first paragraph of *AC2.5.2.1.2*.

Due to the limited use of salt in Louisiana, a minimum slope of 5 percent is considered a

distance not exceeding 10.0 in. from fascia edge. Except for substructures under continuous deck without joints, all top surfaces of substructures, other than bearing seats, shall have a minimum slope of 5 percent toward the edge, typically in the direction of traffic.

2.5.2.2—Inspectability

The following shall supplement *A2.5.2.2*.

Inspection and maintenance requirements for critical details shall be stipulated on the plans. Adequate and safe means of access for bridge inspection shall be provided. Bridge plans shall specify methodologies by which access can be provided to such locations for inspection purposes. Design information for inspectability shall be reviewed during preliminary design, final design and construction.

For special bridge conditions, the inspectability requirements shall be approved by the Bridge Design Engineer Administrator.

Inspection walks are required on spans having any of the following conditions:

- Span length > 300 feet and the span cannot be readily inspected with conventional equipment (such as "snoopers", "reach-alls", etc.) from the bridge deck or the span is inaccessible from underneath.
- Total bridge width > 60 feet and the span is inaccessible from underneath.
- Combined depth of beam, girder, deck, barrier railing, fence, noise wall, etc. > 11.5 feet and the span is inaccessible from underneath.
- Vertical clearance > 30 feet.

A minimum design live load of 80 psf shall be used in the design of inspection walks. The minimum clear walkway width (completely free of any protruding objects) of the inspection walk shall be 3’-6”. The minimum overhead clearance within the walkway shall be 6 feet. Toe guard protection and railing shall be provided if the walk is not protected by the girders.

Access and entrance to the inspection walk shall be secured to prevent unauthorized use. Walks shall be designed to provide safe access, exit, and transfer from one area to another for at least one person 6 reasonable slope to enable rains to wash away debris and salt.

feet tall carrying tools and equipment. Walks shall be designed for all applicable loads and vibration shall be considered in the design of all members, connections, and fasteners.

For piers supporting spans that require inspection walks, access to the top of the pier and inspection walks along the faces of the pier cap shall be provided.

In addition to the inspection walk requirements, inspection cables shall be provided on spans having any of the following conditions:

- Steel girder with web depth > 6 feet over water.
- Steel girder with web depth > 6 feet over land with vertical clearance > 30 feet.

Refer to *BDSD Steel Girder Details* for inspection cable details.

Vent holes and inspection hatches shall be provided for enclosed sections to meet the requirements for inspection purpose and worker safety, and the dimensions shall meet industry standards. Provisions for lighting, cross ventilation, and steps shall be made where required. Interiors of steel box girders shall have white top coat paint for inspection purposes.

2.5.2.3—Maintainability

The following shall replace the first sentence in the first paragraph of *A2.5.2.3*.

Structural systems and devices (such as joints, bearings, etc.) whose future maintenance is expected to be difficult, should be avoided.

The following shall supplement the second paragraph of *A2.5.2.3*.

Minimum 4 inches of vertical clearance above top of cap and 9 inches of horizontal distance between edge of bearing support or riser and edge of cap shall be provided to facilitate inspection, jacking, cleaning, repair, and replacement of bearings.

For joints that require access from underside of deck for inspection, repair, and maintenance, such as pivot pin (rack & pinion), compression joints, etc., adequate clearance shall be provided and shown on the plans.

2.5.2.4—Rideability

The following shall supplement the first paragraph of *A2.5.2.4*.

A reinforced concrete approach slab shall be required at the ends of all bridges to create a smoother transition from the rigid bridge structure to the flexible road embankment. Standards have been developed for 10', 20' and 40' long approach slabs. 10' slab shall be used on off-system bridges only. 20' and 40' slabs shall be used on on-system bridges and may be used on off-system bridges when needed. Refer to BDSD *Approach Slabs* for details. Use of all other types of approach slabs shall be approved by the Bridge Design Engineer Administrator.

Approach slabs shall meet the following requirements:

- Minimum thickness: 1'-6" (20' and 40' slabs)
  1'-0" (10' slab)
- Minimum length:

  <u>On-system bridges:</u> Use 40' slab for fill embankment and 20' slab for cut embankment

  <u>Off-system bridges:</u> Use 10' slab for cut sections or for embankment with less than 2 feet of fill. Where higher traffic count and/or larger embankment settlement is expected, it may be justified to use 20' or 40' slabs. The bridge engineer should work with Geotech to make that determination. In general, consider a 20' slab for fill heights between 2 and 8 feet, and a 40' slab for fill heights above 8 feet.
- Concrete cover: 2 ½" top, 2" bottom
- Concrete strength: f'_c = 4000 psi
- Steel yield strength: f_y = 60 ksi
- Longitudinal reinforcement (parallel to roadway):
  #8@6" top, #10@6" bottom (40' slab)
  #8@6" top and bottom (20' slab)
  #4@12" top, #6@6" bottom (10' slab)
- Transverse reinforcement (perpendicular to roadway):
  #8@6" top and bottom (20' and 40' slab)
  #4@12" (10' slab)

The following shall replace the last paragraph of *A2.5.2.4*.

Correction of the deck profile by grinding is generally not performed on bridge decks unless

C2.5.2.4

The following shall supplement *AC2.5.2.4*.

The on-system approach slab design was based on the research performed in LTRC project 03-4GT, "*Determination of Interaction Between Concrete Approach Slab and Embankment Settlement"*, and LTRC project 05-1GT, *"Field Demonstration of New Bridge Approach Slab Designs and Performance"*. The final reports for these two projects are published in LADOTD LTRC website. Additional analysis was performed to verify the results from LTRC 03-4GT and extend the design to account for LADV-11 live load.

For the design of the main bottom longitudinal reinforcement, the slab was assumed to have lost all contact with the supporting soil and was designed as a simply-supported slab. Design conditions of partial embankment loss (assume ½ and ¾ unsupported length) were also examined, but the cost comparison of the designs showed that the simply-supported slab would not be significantly more expensive. For the design of top longitudinal reinforcement and transverse reinforcement, a design condition of 10 feet of embankment loss at the edge of the slab was assumed. The design also considered a maximum 45-degree skew condition, and finite element models were generated to verify the design. Edge beams were included to control live load deflection. A sleeper slab and geosynthetic soil reinforcement were added under the roadway end of the approach slab to reduce settlement based on the recommendations in LTRC project 05-1GT.

Pile-supported approach slabs with varying pile lengths have been used in the past for sites with large embankment settlement in south Louisiana. This pile-supported approach slab standard was evaluated in LTRC project 97-4GT. The results indicated that the standard being used by LADOTD did not always produce acceptable results. The research provided a design methodology, however, from a practical stand point, it is impossible to accurately predict the surface settlement of a pile-embankment composite, which is necessary to create a smooth transition between the roadway and the bridge.

requested by the Bridge Design Engineer Administrator for specific projects. The EOR should consider providing additional thickness to the deck to compensate for thickness loss due to grinding. The thickness requirement should be determined on a case-by-case basis for these projects.

Therefore, it is no longer recommended to use a pile-supported approach slab. For project sites that need special attention in controlling the settlement, the designer should work with the geotechnical engineer and may utilize other means to control or mitigate the settlement.

For 10' long off-system approach slabs, finite element modeling shows that the current LA DOTD design is sufficient for current loads. Field visits were made to a number of off-system bridges, confirming that these slabs are performing acceptably.

2.5.2.5—Utilities

The following shall replace *A2.5.2.5*.

Utilities shall not be permitted on bridge structures without the approval of the Chief Engineer, except for communication cables which are allowed in accordance with *EDSM IV.2.1.8—Communication Cable Installation on Highway Structures.*

In cases where utilities other than communication cables are permitted on the bridge structures, the utility owner must submit the following information to the Bridge Design Engineer Administrator for review and approval.

- Method of attachment to bridge structure and to the utility support.
- Size, material and weight of the utilities.
- Any special requirements, such as expansion joint locations, pressure test requirements after installation, maintenance and inspection requirements, etc.
- All applicable calculations and drawings which are stamped, signed, and dated by an EOR.

All utility supports shall be designed in accordance with AASHTO *LRFD Bridge Design Specifications* and *BDEM*.

2.5.2.6—Deformations

2.5.2.6.1—General

The following shall replace the first paragraph of *A2.5.2.6.1*.

Deflection limits and minimum span-to-depth

C2.5.2.6.1

The following shall supplement *AC2.5.2.6.1*.

In the absence of better criterion, LADOTD believes that it is appropriate to limit deflections

ratios shall be as specified in *A2.5.2.6.2* and *A2.5.2.6.3*.

2.5.2.6.2—Criteria for Deflection

The following shall replace the first paragraph of *A2.5.2.6.2*.

The criteria in this section shall be followed.

The following shall replace the first sentence in the third paragraph of *A2.5.2.6.2*.

The following principles shall be applied for deflection control:

The following shall supplement the third bullet in the third paragraph of *A2.5.2.6.2*.

LADOTD standard barrier design is not structurally continuous; therefore, it shall not be considered in calculating composite section stiffness.

2.5.2.6.3—Optional Criteria for Span-to-Depth Ratios

The following shall replace the first paragraph of *A2.5.2.6.3*.

Structures and components of structures shall satisfy the span-to-depth ratios given in *Table A2.5.2.6.3-1* in which "S" is the slab span length between the centers of supports and "L" is the span length between the center of supports, both in feet. Where used, the limits in Table 2.5.2.6.3-1 shall be taken to apply to overall depth, unless noted.

2.5.2.7—Consideration of Future Widening

2.5.2.7.1—Exterior Beams on Multi-beam Bridges

The following shall replace *A2.5.2.7.1*.

Non-composite section capacity of exterior beams shall not be less than that of interior beams to allow for future widening.

2.5.2.7.2—Substructure

The following shall replace *A2.5.2.7.2*.

When future bridge widening and lengthening can be anticipated, consideration shall be given to designing substructures geometrically and structurally for anticipated conditions.

and span-to-depth ratios.

2.5.3—Constructability

The following shall supplement *A2.5.3*.

Refer to *EDSM III.1.1.32—Constructability/ Biddability Review* for LADOTD Constructability/ Biddability review policy.

2.5.4—Economy

2.5.4.2—Alternative Plans

The following shall replace *A2.5.4.2*.

Alternative plans will not be required, unless requested by the Bridge Design Engineer Administrator.

2.5.5—Bridge Aesthetics

The following shall supplement the first paragraph of *A2.5.5*.

It is LADOTD policy to consider Context Sensitive Solutions (CSS) for all of its transportation and public works projects. Designers should follow LADOTD's policy and work with other project development staff to implement CSS in bridge designs.

The following shall supplement the last paragraph of *A2.5.5*.

- In areas where spans can be observed by passing motorists, businesses, and/or residences on adjacent properties, attention should be paid to surface finishes on exposed concrete surfaces of substructures and superstructures. All surfaces that require special finishes must be clearly defined and shown on the contract plans. Refer to LADOTD *Standard Specifications for Road and Bridges* for the specific requirements of various classes of concrete surface finishes.

- For structures in urban areas or locations where aesthetics is important, the following deck drainage provisions apply:

  Deck drainage shall be carried off the structure to minimize staining potential, such as by use of scupper and pipe collection systems. Waterstops shall be used to seal any locations where water is anticipated to cause staining.

  When scupper and pipe collection or similar

systems are not used, gutterline deck drain holes shall be used with discharge kept away from girders either by distance or use of downspout extensions. Drain slots in barrier railings shall not be used.

- In urban areas, consideration should be given to placing cover walls at ends of bent caps to hide joint openings, anchor bolts and risers normally seen in the elevation view.
- When weathering steel is to be used, special considerations should be given to keep runoff from staining the substructures.
- The centerline of exterior girders shall be aligned with that of exterior girders in adjacent spans. Centerlines of exterior columns and piles shall be aligned respectively with that of exterior columns and piles in adjacent bents to the extent practical.

2.6—HYDROLOGY AND HYDRAULICS

The following shall supplement *A2.6*.

Refer to LADOTD *Hydraulic Manual*, which is posted on the LADOTD website, for the department's hydraulic design policies. Where conflict exists in the AASHTO provisions and the *Hydraulic Manual*, the LADOTD Hydraulic Design Unit should be contacted to resolve the differences.

2.6.6—Roadway Drainage

2.6.6.3—Type, Size, and Number of Drains

The following shall supplement *A2.6.6.3*.

Refer to FHWA *Hydraulic Engineering Circular No. 21* for additional guidance on the design of bridge deck drainage.

When scuppers or downspouts are utilized, a minimum size of 8 inch diameter at maximum 10 feet spacing shall be provided. When drain slots in the barrier are used, a minimum slot size of 24 inches (length) × 6 inches (height) at a maximum of 10 feet spacing shall be provided.

2.6.6.4—Discharge From Deck Drains

The following shall supplement *A2.6.6.4*.

Free drops from the deck drains shall be avoided

C 2.6.6.4

The following shall supplement *C2.6.6.4*.

over railroad tracks, roadways, and revetments.

Slot drains in barriers should be used wherever practical and permissible except for structures in urban areas or locations where aesthetics is important (*D2.5.5*). The use of scuppers or drain holes in the deck should be minimized. When used, they should be located midway between cross frames or diaphragms and designed to ensure that run-off will be directed away from superstructure and substructure elements.

Fiberglass or PVC downspouts should be used and shall extend at least 1 foot below the bottom of the superstructure.

For drain conveyances encased in concrete, the installation shall include a 1 inch compressible protective covering between the pipe and the concrete to minimize stresses caused by expansion of pipe and shrinkage of the concrete.

Occasionally, downspouts have been encased in the substructure concrete. This practice should be avoided whenever possible, because it usually creates cleanout problems and can result in chloride damage to the concrete.

2.7—BRIDGE SECURITY

The following shall supplement *A2.7*.

Bridge security considerations will be specified by the Bridge Design Engineer Administrator for bridges deemed critical or essential. If specified, the provisions in AASHTO *Bridge Security Guidelines* should be followed.

2.8—REFERENCES

The following shall supplement *A2.8*.

ADA Standards for Accessible Design, Latest Edition, Department of Justice, www.ADA.gov.

A Policy on Geometric Design of Highways and Streets; Latest Edition, American Association of State Highway and Transportation Officials, Washington, DC.

Guide for the Development of Bicycle Facilities, Latest Edition, American Association of State Highway and Transportation Officials, Washington, DC.

Louisiana Standard Specifications for Roads and Bridges, Latest Edition, State of Louisiana Department of Transportation and Development, Baton Rouge, LA.

U. S. Coast Guard, U.S. Department of Homeland Security. www.uscg.mil.

CHAPTER 3 – LOADS AND LOAD FACTORS

TABLE OF CONTENTS

3.3—NOTATION 1
3.3.2—Load and Load Designation 1
3.4—LOAD FACTORS AND COMBINATIONS 1
3.4.1—Load Factors and Load Combinations 1
3.4.2—Load Factors for Construction Loads 1
3.5—PERMANENT LOADS 3
3.5.1—Dead Loads: DC, DW and EV 3
3.6—LIVE LOADS 5
3.6.1—Gravity Loads: *LL* and *PL* 5
3.6.1.1—Vehicular Live Load 5
3.6.1.1.1—Number of Design Lanes 5
3.6.1.2 Design Vehicular Live Load 5
3.6.1.2.1 —General 5
3.6.1.3—Application of Design Vehicular Live Loads 7
3.6.1.3.1—General 7
3.6.1.3.4 —Deck Overhang Load 7
3.6.1.4 —Fatigue Load 7
3.6.1.4.2 —Frequency 7
3.6.1.4.3—Load Distribution for Fatigue 11
3.6.1.4.3a—Refined Methods 11
3.6.2—Dynamic Load Allowance: *IM* 11
3.6.2.1—General 11
3.6.4—Braking Force: BR 11
3.6.5.1 - Protection of Structures 12
3.7—WATER LOADS: WA 12
3.7.3—Stream Pressure 12
3.7.3.1—Longitudinal 12
3.7.3.2—Lateral 12
3.7.4—Wave Load 12
3.8—WIND LOAD: *WL* AND *WS* 13
3.8.3—Aeroelastic Instability 13

3.8.3.1—General 13
3.9—ICE LOADS: *IC* 13
3.10—EARTHQUAKE EFFECTS: *EQ* 13
3.10.5—Operational Classification 20
3.10.8—Combination of Seismic Force Effects 20
3.12—FORCE EFFECTS DUE TO SUPERIMPOSED DEFORMATIONS: *TU, TG, SH, CR, SE, PS* 20
3.12.2—Uniform Temperature 20
3.12.2.1—Temperature Range for Procedure A 20
3.12.2.3—Design Thermal Movement 21
3.12.3—Temperature Gradient 21
3.12.5—Creep 21
3.14—VESSEL COLLISION 22
3.14.1—General 22
3.14.2—Owner's Responsibility 22
3.14.3—Operational Classification 23
3.14.5—Annual Frequency of Collapse 23
3.14.5.3—Geometric Probability 23
3.14.6—Design Collision Velocity 23
3.14.13—Damage at Extreme Limit State 23
3.14.14—Application of Impact Force 23
3.14.14.1 - Substructure Design 23
3.14.16—Security Considerations 24
3.16—REFERENCES 24

LIST OF TABLES

Table 3.4.1-1—Load Combinations and Load Factors 2
Table 3.5.1-1 — Unit Weights of Common Permanent Loads 4
LADV-11 Magnification Factor Table 6
Louisiana Seismic Design Information Table 17
Design Temperature Range Table 20

LIST OF FIGURES

Design Lane Example for Manual Calculations 5
Plan View of Wedged-Nosed Piers 12
Louisiana Seismic Site Class Map 15
Louisiana Seismic Zone Map 16

3.3—NOTATION

3.3.2—Load and Load Designation

The following shall replace definition of WA in *A3.3.2*.

WA = water load, stream pressure or wave force.

3.4—LOAD FACTORS AND COMBINATIONS

3.4.1—Load Factors and Load Combinations

The following shall supplement *A3.4.1*.

Table 3.4.1-1 shall replace Table *A3.4.1-1*.

3.4.2—Load Factors for Construction Loads

The following shall supplement *A3.4.2*.

A statement shall be included in the contract plan, which clearly defines that the contractor is responsible for safety and stability of structures during all phases of construction and design of forming and bracing systems used to place concrete for bridge components.

A statement shall be included in the contract plan indicating that the contractor is responsible for determining deflection of formwork due to weight of wet concrete, screed and other construction loads.

The EOR shall also consider construction loads during various phases of construction in the design for all applicable load cases.

C3.4.2

The following shall supplement *AC3.4.2*.

The design of formwork and temporary bracing is the contractor's responsibility. The contractor's registered Professional Engineer shall evaluate the ability of all structural elements and formwork to safely support the construction loads. Construction loads shall include but not be limited to forms, bracing, wet concrete, walkway overhangs, workforce, concrete screeding machines and appurtenances. Forming and bracing systems used to place concrete for bridge decks with large overhangs induce large horizontal forces in the fascia girder. These forces can cause lateral buckling and deflection problems in fascia girder resulting in a poor deck profile.

Construction load from temporary material storage on the bridge should be considered if known in the design stage.

Refer to the latest edition of AASHTO *Guide Design Specification for Bridge Temporary Works* for the minimum construction requirements.

Table 3.4.1-1—Load Combinations and Load Factors

Load Combination Limit State	**DC DD DW EH EV ES EL PS CR SH**	**LL IM CE BR PL LS**	**WA**	**WS**	**WL**	**FR**	**TU**	**TG**	**SE**	Use One of These at a Time				**SC[1]**
										EQ	IC	CT	CV	
Strength-I	γ_p	1.75	1.00	-	-	1.00	0.50/1.20	γ_{TG}	γ_{SE}	-	-	-	-	-
Strength-II	γ_p	1.35	1.00	-	-	1.00	0.50/1.20	γ_{TG}	γ_{SE}	-	-	-	-	-
Strength-III	γ_p	-	1.00	1.40	-	1.00	0.50/1.20	γ_{TG}	γ_{SE}		-	-	-	-
Strength-IV	γ_p	-	1.00	-	-	1.00	0.50/1.20	-	-	-	-	-	-	-
Strength-V	γ_p	1.35	1.00	0.40	1.00	1.00	0.50/1.20	γ_{TG}	γ_{SE}	-	-	-	-	-
Extreme Event-I	γ_p	**0.25[2]**	1.00	-	-	1.00		-	-	1.00	-	-	-	
Extreme Event-II	γ_p	0.50	1.00	-	-	1.00	-	-	-	-	1.00	1.00	1.00	-
Extreme Event-III[1]	$\boldsymbol{\gamma_p}$	**1.75**	**1.00**	**0.30**	**-**	**1.00**	**-**	$\boldsymbol{\gamma_{TG}}$	$\boldsymbol{\gamma_{SE}}$	**-**	**-**	**-**	**-**	**1.00**
Extreme Event-IV[1]	$\boldsymbol{\gamma_p}$	**-**	**1.00**	**1.40**	**-**	**1.00**	**-**	$\boldsymbol{\gamma_{TG}}$	$\boldsymbol{\gamma_{SE}}$	**-**	**-**	**-**	**-**	**0.70**
Extreme Event-V[1]	$\boldsymbol{\gamma_p}$	**-**	**1.00**	**-**	**-**	**1.00**	**-**	**-**	**-**	**-**	**1.00**	**1.00**	**1.00**	**0.60**
Extreme Event-VI[1]	$\boldsymbol{\gamma_p}$	**-**	**1.00**	**-**	**-**	**1.00**	**-**	**-**	**-**	**1.00**	**-**	**-**	**-**	**0.25**
Service-I	1.00	1.00	1.00	0.30	1.00	1.00	1.00/1.20	γ_{TG}	γ_{SE}	-	-	-		-
Service-II	1.00	1.30	1.00	-	-	1.00	1.00/1.20	-	-	-	-	-		-
Service-III	1.00	**1.00[3]**	1.00	-	-	1.00	1.00/1.20	γ_{TG}	γ_{SE}	-	-	-		-
Service-IV	1.00	-	1.00	0.70	-	1.00	1.00/1.20	-	1.00	-	-	-		-
Fatigue- I LL, IM & CE only	-	1.50	-	-	-	-	-	-	-	-	-	-	-	-
Fatigue- II LL, IM & CE only	-	0.75	-	-	-	-	-	-	-	-	-	-	-	-

1. SC (Scour) is the total scour depth determined by Bridge Hydraulic Engineer in accordance with *HEC-18*. Scour is not a load, but an extreme event that alters geometry of the foundation, possibly causing structural collapse or amplification of applied load effects. Adopted factors for SC are based on NCHRP Report 489, *Design of Highway Bridges for Extreme Events*, and modified for Louisiana practice.

2. NCHRP Report 489 has shown that the commonly used live load factor of 0.50 in combination with earthquake effects is conservative and a reduced live load factor of 0.25 will provide an adequate safety level. Since probability of a major earthquake occurring in Louisiana is generally very low, it is reasonable to use a live load factor of 0.25.

(*continued on next page*)

(*continued from previous page)*

3. The 0.8 factor is based on the performance of bridges designed under LFD criteria which did not include lane load provision in the live load model. In addition, prestress loss calculations have gone through further refinement, resulting in significant reduction of prestressed loss, which results in more streamlined bridges. Another aspect to consider is that current experience from Louisiana and many states indicates a trend towards heavier hauling vehicles which significantly exceeds the HL-93 live load model.

3.5—PERMANENT LOADS

3.5.1—Dead Loads: DC, DW and EV

The following shall supplement *A3.5.1*.

Table 3.5.1-1, which lists the unit weight of common permanent loads, shall replace Table *A3.5.1-1*.

Design for future wearing surface (DW) shall be per Table 3.5.1-1. DW shall not be considered in the computation of girder camber, creep, or geometry. DW shall be distributed equally to all girders in the cross section.

Stay-in-place forms may be used between interior girders and shall be assumed to be simply supported. Stay-in-place forms shall not be used on deck overhangs unless approved by the Bridge Design Engineer Administrator. The unit weight shall be per Table 3.5.1-1 unless a more precise weight is available from the manufacturer.

For bridges without a raised sidewalk, barrier weight and weight of all incidental attachments to barrier, such as fences, sound walls, and minor utilities, shall be distributed equally to all girders in the cross section.

For bridges with a raised sidewalk, the following distributions shall apply:

- If an entire sidewalk is on the overhang, the total weight of barrier and all incidental attachments shall be distributed to the exterior girder only.
- If a sidewalk spans over the exterior girder only, 60 percent of the total weight of barrier and all incidental attachments shall be distributed to the exterior girder, the remaining 40 percent shall be equally distributed to interior girders.
- If a sidewalk spans over two or more girders, the total weight of barrier and all incidental attachments shall be distributed equally to all girders in cross section.

For special cases, such as staged construction or presence of heavy utilities, a more accurate method for distribution of these loads shall be investigated.

Bridges which require installation of sound walls shall

be designed to accommodate corresponding dead, live, and wind loads for the required wall height. The minimum weight of wall shall be per Table 3.5.1-1.

Table 3.5.1-1 — Unit Weights of Common Permanent Loads

Aluminum Alloys		0.175 kcf
Asphaltic Concrete, Unit Weight		0.145 kcf
Barrier (32'' F-Shape)		0.284 klf
Barrier (42'' F-Shape)		0.521 klf
Barrier (32'' F-Shape Double Face Median Barrier)		0.437 klf
Barrier (42'' F-Shape Double Face Median Barrier)		0.585 klf
Barrier (32'' Vertical Face)		0.333 klf
Barrier (32''Vertical Face)		0.525 klf
Bituminous Wearing Surfaces		0.140 kcf
Cast Iron		0.450 kcf
Cinder Filling		0.060 kcf
Compacted Sand, Silt, or Clay		0.120 kcf
Concrete Overlay		0.150 kcf
Concrete - Lightweight		0.110 kcf
Concrete – Normal Weight ($f_c^{'} \leq 5.0\ ksi$)		0.145 kcf
Concrete – Normal Weight ($5.0\ ksi < f_c^{'} \leq 15.0\ ksi$)		$0.140 + 0.001\ f_c^{'}$ kcf
Concrete – Reinforced ($f_c^{'} < 7.5\ ksi$)		0.150 kcf
Concrete – Reinforced ($f_c^{'} \geq 7.5\ ksi$)		0.155 kcf
Future Wearing Surface (Between the Curbs)		0.025 ksf
Loose Sand, Silt, or Gravel		0.100 kcf
Rolled Gravel, Macadam, or Ballast		0.140 kcf
Soft Clay		0.100 kcf
Soil (Compacted)		0.125 kcf
Stay-in-Place Metal Forms (Foam Filled)		0.010 ksf
Steel		0.490 kcf
Sound Wall		• Min. 0.100 klf for wall heights up to 10 ft. • Min. 0.200 klf for wall heights greater than 10 ft.
Stone Masonry		0.170 kcf
Transit Rails, Ties, and Fastening per Track		0.200 klf
Wood	Hard	0.060 kcf
	Soft	0.050 kcf
Water	Fresh	0.0624 kcf
	Salt	0.0640 kcf

3.6—LIVE LOADS

3.6.1—Gravity Loads: *LL* and *PL*

3.6.1.1—Vehicular Live Load

3.6.1.1.1—Number of Design Lanes

The following shall supplement *A3.6.1.1.1*.

Use of 10 feet design lane width is allowed for manual calculations. Live load shall be allowed anywhere on the clear roadway including a raised median with or without a mountable curb.

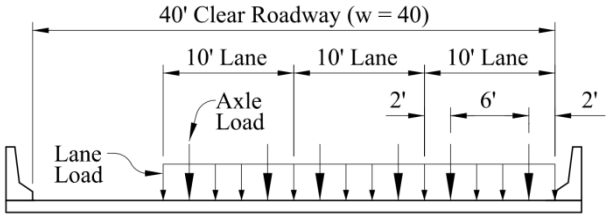

Number of Design Lanes = 40' / 12 = 3.33 (Use 3)

Width of Design Lane = 10'

Design Lane Example for Manual Calculations

3.6.1.2 Design Vehicular Live Load

3.6.1.2.1 —General

The following shall supplement *A3.6.1.2.1*.

All bridges in Louisiana shall be designed for *Louisiana Design Vehicle Live Load 2011* (LADV-11). Use of LADV-11 shall be indicated on the General Notes plan sheet under "Design Criteria".

LADV-11 is the product of the force effects produced by HL-93, as specified in *A3.6.1.2* and a magnification factor (MF) listed in the Magnification Factor Table below.

MF in the Magnification Factor Table shall be applied to all bridge elements and limit states that are subject to design vehicular live load, but with the following exceptions:

- MF = 1.0, when applying the design vehicular live load to decks, deck systems, and the top slab of box culverts per *A3.6.1.3.3*.
- MF = 1.0, when determining the live load deflection per *A3.6.1.3.2*.

For fatigue load in *A3.6.1.4*, MF in the Magnification Factor Table shall be applied to the design truck. For braking forces in *A3.6.4*, MF in the Magnification Factor Table shall be applied to the design truck or lane load, respectively.

C3.6.1.2.1

The following shall supplement *AC3.6.1.2.1*.

LADV-11 was developed to provide a live load model that is representative of routine permit vehicles in Louisiana, which are not enveloped by the HL-93 load model. Bridges designed using LADV-11 will meet the minimum service and strength requirements for these vehicles and satisfy load rating and evaluation criteria.

Magnification factors were developed through rigorous analysis of the load effects of the aforementioned permit vehicles and HL-93 load model on simple and continuous span bridges with varying span lengths. The value of MF varies and is a function of span length. LADV-11 is essentially a magnified HL-93 load model that is representative of current routine truck traffic in Louisiana.

The study report for the development of LADV-11, "*LADV-11 Development*", is included in *BDEM-Part IV*.

A3.6.1.7 (Loads on Railing), *A3.6.3* (Centrifugal Forces), and *A3.6.5* (Vehicular Collision Forces) will not be impacted by LADV-11 and shall remain unchanged.

LADV-11 Magnification Factor Table

Load Effect	Range of Applicability	Magnification Factor (MF)
M^+, V	$L \leq 240$	1.30
	$240 < L < 600$	1.30-0.00083(L-240)
	$L \geq 600$	1.00
M^-	$L \leq 100$	1.30
	$100 < L < 240$	1.30-0.00214(L-100)
	$L \geq 240$	1.00
R_B	All Span Lengths	1.60
R_F	$L_1 + L_2 \leq 100$	1.30
	$100 < L_1 + L_2 < 240$	$1.30-0.00214(L_1+L_2-100)$
	$L_1 + L_2 \geq 240$	1.00
R_S	$L_1 + L_2 \leq 100$	1.55
	$100 < L_1 + L_2 < 600$	$1.55-0.00110(L_1+L_2-100)$
	$L_1 + L_2 \geq 600$	1.00

L = Span Length taken as center of bearing to center of bearing length, feet (use the shortest span length for unequal continuous spans)

$L_1 + L_2$ = Sum of Span 1 Length and Span 2 Length on either side of the support, feet (for end bents use the approach slab length as L_1 and the span length as L_2)

M^+ = Positive Moment (use for design of superstructure elements only)

M^- = Negative Moment (use for design of superstructure elements only)

V = Shear (use for design of superstructure elements only)

R_B = Bearing Reaction (use for design of bearings only)

R_F = Factored Support Reaction (use for design of all substructure elements and determination of factored pile/shaft loads)

R_S = Service Support Reaction (use for determination of service pile/shaft loads only)

* Equations are linear interpolations between the upper and lower values of the MFs.

3.6.1.3—Application of Design Vehicular Live Loads

3.6.1.3.1—General

The following shall supplement *A3.6.1.3.1*.

For slab span bents, the live load shall be placed along span to cause a maximum reaction to the bent. The wheel loads directly over the bent shall be treated as concentrated loads. Contributing reactions from wheel loads on span and lane load shall be treated as uniform load distributed over the design lane width of 10 ft.

C3.6.1.3.1

The following shall supplement *AC3.6.1.3.1*.

An interior pier or interior support is defined as a substructure supporting a continuous segment of superstructure.

3.6.1.3.4 —Deck Overhang Load

The following shall replace first paragraph of *A 3.6.1.3.4*.

Structural stiffness and strength contribution of continuous barriers shall not be considered in the design of any structural bridge component.

3.6.1.4 —Fatigue Load

3.6.1.4.2 —Frequency

C3.6.1.4.2

The following shall supplement *AC3.6.1.4.2*.

A typical traffic data sheet prepared by LADOTD Traffic Engineer consists of the following information:

Current year ADT = Average daily traffic volume for both directions of travel
20 year design life ADT = Average daily traffic volume for both directions of travel for 20 year design life
R = Annual Growth Rate (%)
D = Directional distribution factor (%)
T = Percentage of truck traffic (%)

Frequency of the fatigue load $ADTT_{SL}$ that averages over the bridge design life of 75 years should be determined utilizing information in traffic data sheet as follows:

Example 1:

Assume current year ADT = 5000
R = 2%
D = 55%
T = 12%
Number of lanes per direction available to trucks = 2
(If there is a designated truck lane, this number should be taken as 1.)

Step 1: Determine current year ADT_{SL} per direction per lane.

Current year ADT_{SL} = current year ADT × D × p (per *Table A3.6.1.4.2-1*) = 5000 × 55% × 0.85 = 2,338

Step 2: Determine 75 year design life ADT per direction per lane using the annual growth rate, this number should not exceed 20,000 per *AC3.6.1.4.2*.

75 year design life ADT_{SL} = current year ADT_{SL} × $(1+R)^{75}$ = 2,338 × $(1+2\%)^{75}$ = 10,324 < 20,000

Step 3: Determine average ADT_{SL} over 75 years of design life (equal to area 1 under exponential curve of traffic growth from current year to 75 year divided by a design life span of 75 years).

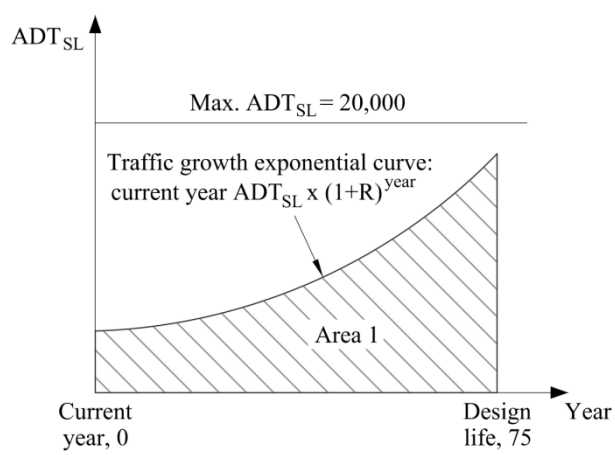

Area 1 under exponential curve of traffic growth from current year to 75 year = (current ADT_{SL})×$((1+R)^{75}-1)/(\ln(1+R))$ = 2,338×$((1+2\%)^{75}-1)/(\ln(1+2\%))$ = 403,291
Average ADT_{SL} = 403,291/75 = 5,377

Step 4: Determine average $ADTT_{SL}$ over 75 years of design life.

Average $ADTT_{SL}$ = Average ADT_{SL} × T = 5,377 × 12% = 645

Example 2:

Assume current year ADT = 10,000
R = 2%
D = 55%
T = 12%
Number of lanes per direction available to trucks = 1
(Assume there is a designated truck lane.)

Step 1: Determine current year ADT_{SL} per direction per lane.

Current year ADT_{SL} = current year ADT × D × p (per *Table A3.6.1.4.2-1*) = 10,000 × 55% × 1 = 5,500

Step 2: Determine 75 year design life ADT per direction per lane using the annual growth rate; this number should not exceed 20,000 per AC3.6.1.4.2.

75 year design life ADT_{SL} = current year ADT_{SL} × $(1+R)^{75}$ = 5,500 × $(1+2\%)^{75}$ = 24,287 > 20,000
Max. design life ADT_{SL} = 20,000

Step 3: Determine the design year, Y, that reaches maximum design life ADT_{SL} = 20,000.

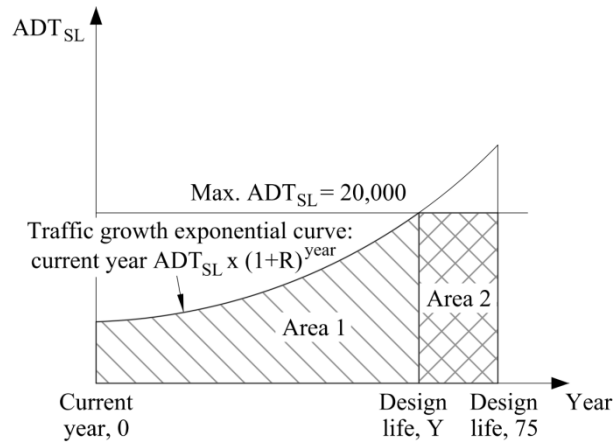

Solve Y from this equation:
Max. design life ADT_{SL} = current $ADT_{SL} \times (1+R)^Y$
$20{,}000 = 5500\ (1+2\%)^Y$
Y = 65 years

Step 4: Determine average ADT_{SL} over 75 years of design life (equal to the sum of area 1 under exponential curve of traffic growth from current year to year 65 and area 2 under maximum design life ADT_{SL} from year 65 to year 75 divided by a design life span of 75 years).

Area 1 under exponential curve of traffic growth from current year to year 65=
(current ADT_{SL})$\times((1+R)^{65}-1)/(\ln(1+R))$ = $5{,}500\times((1+2\%)^{65}-1)/(\ln(1+2\%)) = 728{,}382$

Area 2 under maximum design life ADT_{SL} from year 65 to year 75 =
$20{,}000 \times (75-65) = 200{,}000$

Average ADT_{SL} = (728,382 + 200,000)/75 = 12,378

Step 5: Determine average $ADTT_{SL}$ over 75 years of design life.

Average $ADTT_{SL}$ = Average $ADT_{SL} \times T$ = 12,378 × 12% = 1,485

3.6.1.4.3—Load Distribution for Fatigue

3.6.1.4.3a—Refined Methods

The following shall supplement *A3.6.1.4.3a*.

The live load distribution factors shall be calculated based on the refined analysis and clearly shown on design plans.

3.6.2—Dynamic Load Allowance: *IM*

3.6.2.1—General

The following shall supplement the last paragraph of *A3.6.2.1*.

For piles or drilled shafts that are not fully embedded in the ground, IM shall be included in the structural capacity check but not in the load calculations used for length determination.

3.6.4—Braking Force: BR

The following shall supplement *A3.6.4*.

For two-directional bridges that are not likely to become one-directional in the future, the number of lanes used to calculate the braking force shall be determined by dividing the total number of design lanes by two and rounding to the nearest integer.

For bridges that are designed as one-directional, or that are likely to become one-directional in the future, the number of lanes used to calculate the braking force shall be equal to the total number of design lanes.

Dynamic load allowance shall not be applied to the braking force.

For superstructures supported by combination of a fixed bearing and expansion bearings, braking force shall be transferred to substructures by the fixed bearing only when practical. If the substructure at fixed bearing is not able to take the total braking force, it is allowed to distribute a portion of the braking force to the adjacent expansion bearings and its substructures. The displacement of the expansion bearings caused by the braking force alone shall not exceed 20% of the design thermal movement of the expansion bearings. For superstructures supported by expansion bearings only, braking force shall be equally distributed to all expansion bearings. The

additional displacement requirement due to the braking force shall be included in the bearing design. The braking force and the effect of the moment component created by the braking force applied at 6 feet above the roadway surface shall be considered in the design of bearings and substructures.

3.6.5.1 - Protection of Structures

The following shall supplement *A3.6.5.1*.

The provisions in *A3.6.5.1* shall be followed unless otherwise approved by the Bridge Design Engineer Administrator for specific project sites.

3.7—WATER LOADS: WA

3.7.3—Stream Pressure

3.7.3.1—Longitudinal

The following shall supplement *A3.7.3.1*.

The debris raft as shown in Figure *AC3.7.3.1-1* shall be applied to all streams with known exhibition of or potential for debris build-up.

3.7.3.2—Lateral

The following shall supplement *A3.7.3.2*.

To allow for a change in the direction of flow over the life of the structure, add an additional 5 degrees to the angle between direction of flow and longitudinal axis of the pier when determining the lateral drag coefficient per Table *A3.7.3.2-1*.

3.7.4—Wave Load

The following shall supplement *A3.7.4*.

For bridges identified as vulnerable to coastal storms, storm surge and wave forces shall be

C3.7.3.1

The following shall supplement *AC3.7.3.1*.

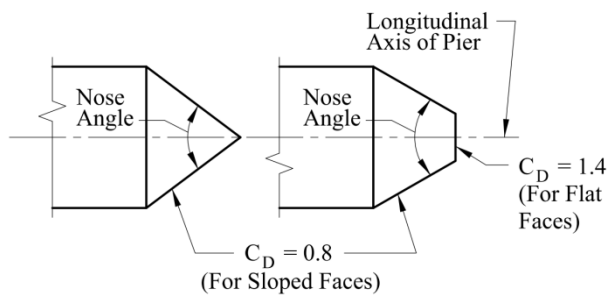

Plan View of Wedged-Nosed Piers

developed based on the latest AASHTO *Guide Specification for Bridges Vulnerable to Coastal Storms*.

3.8—WIND LOAD: *WL* AND *WS*

3.8.3—Aeroelastic Instability

3.8.3.1—General

The following shall supplement *A3.8.3.1*.

For cable-stayed bridges, determination of aeroelastic instability shall be based on wind tunnel tests performed during design phase.

3.9—ICE LOADS: *IC*

The following shall supplement *A3.9*.

This section is not applicable to design of bridges in Louisiana.

3.10—EARTHQUAKE EFFECTS: *EQ*

The following shall supplement *A3.10*.

The following preliminary seismic design information has been developed based on the 1984 Geologic Map of Louisiana. Bridge designer shall work with Geotechnical Engineer to finalize the design information.

- Louisiana Seismic Site Class Map per *A3.10.3.1*.
- Louisiana Seismic Zone Map per *A3.10.6*.
- Louisiana Seismic Design Information Table for each parish. The information includes peak ground acceleration coefficient (PGA per *A3.10.2.1*), short- and long-period spectral acceleration coefficients (S_S & S_1 per *A3.10.2.1*), site class, site factors (F_{pga}, F_a & F_v per *A3.10.3.2*) and elastic seismic response coefficients (A_S, S_{DS} &S_{D1} per *A3.10.4.2*).

C3.10

The following shall supplement *AC3.10*.

The AASHTO site classes A though F are defined in *Table 3.10.3.1-1*. The classifications are based on weighted average soil conditions for the upper 100 feet of soil profile with the exception of site class F with very thick soft/medium stiff clays.

The 1984 Geological Map of Louisiana shows the geological ages of the surficial soils. Since ages of soils can be strongly correlated to the soil strengths, it is appropriate to use the geological map as the basis for site classification.

Site classes A and B are for medium to hard rocks. The occasional outcrop of rocks in Louisiana is insignificant to be used for site classification using Parish as mapping unit. As such, the site class map does not contain classes A and B sites.

It is assumed that the soils that are Miocene and older have strengths greater than 2 ksf and these parishes are grouped as Site Class C.

The soils at Webster, Ouachita and Grant parishes are quite strong and can be grouped in the Site Class C. However, the tributaries of Red River, Ouachita River, and Little River cut through significant part of the parishes. The waterways

brought soils that are unconsolidated and are much weaker. Since most bridges are constructed for waterway crossing, these parishes are grouped as Site Class D.

The soils deposited in Pliocene age are also quite strong. For parishes where no major waterway exists, they are classified as Site D. These parishes include Acadia, Allen, Beauregard, East Feliciana, Jefferson, St. Helena, Tangipahoa, Washington, and West Feliciana.

The dominant geologies of the remaining parishes are Pleistocene or younger. These parishes fall under the site classification of E. It should be noted that the parishes with majority of the areas that are part of the Mississippi River, the Atchafalaya River, and coastal zones are rich in organics and are also grouped in Site E. However, the specific bridge sites may contain significant organic material and may be classified as Site F. The geotechnical engineer of the record should verify the site classifications within these parishes.

It is very important to note that the above site classifications are based on the generalized geological map. It is likely that the site soils have been modified by local stream or human activities. The project geotechnical engineer should always verify the site classifications based on actual geotechnical data gathered.

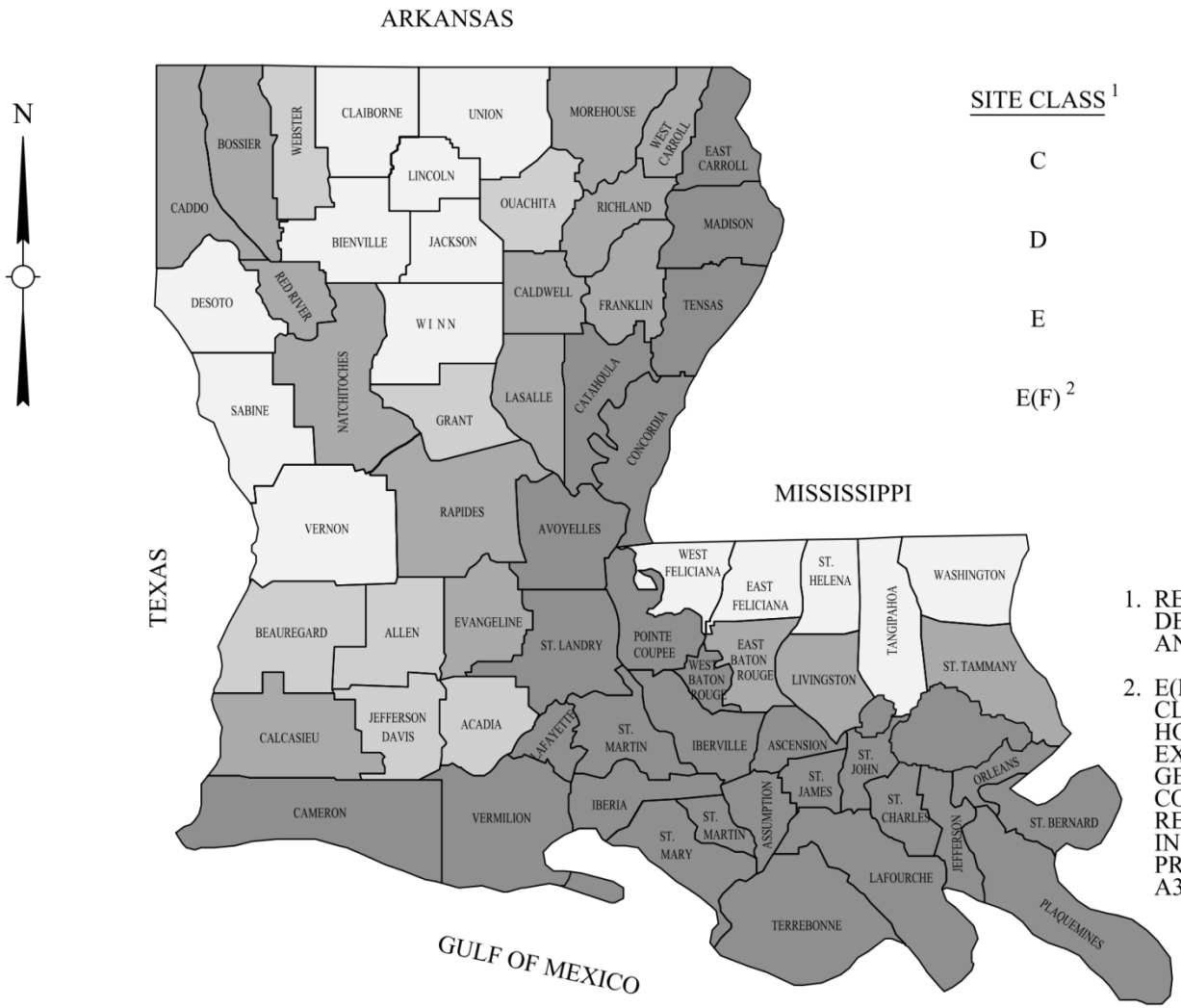

SITE CLASS [1]	SHADE
C	
D	
E	
E(F) [2]	

1. REFER TO TABLE A3.10.3.1-1 FOR THE DEFINITION OF SITE CLASSES C, D, E AND F.
2. E(F) INDICATES THESE PARISHES ARE CLASSIFIED AS SITE CLASS E IN GENERAL. HOWEVER, CLASS F CONDITIONS MAY EXIST IN THESE PARISHES. DOTD GEOTECHNICAL SECTION SHALL BE CONSULTED IF THE BORING INFORMATION REVEALS THE BRIDGES MAY BE LOCATED IN A CLASS F CONDITION. A SITE SPECIFIC PROCEDURE MAY BE REQUIRED PER A3.10.2.

Louisiana Seismic Site Class Map

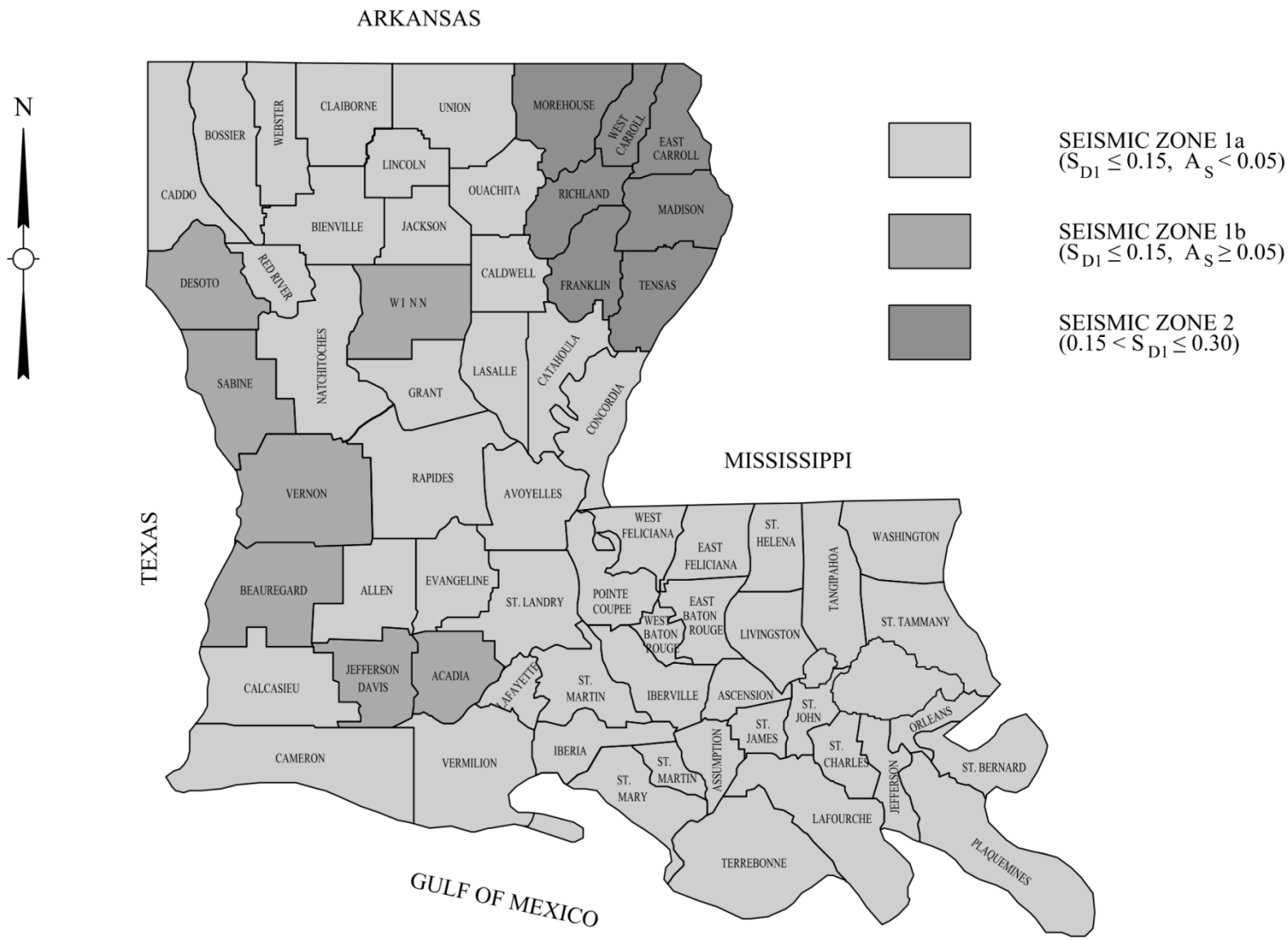

Louisiana Seismic Zone Map

Louisiana Seismic Design Information Table

Parish	PGA	S_s	S_1	Site Class	F_{pga}	F_a	F_v	$A_s=F_{pga}$ PGA	$S_{DS}=F_a S_s$	$S_{D1}=F_v S_1$	Zone
Acadia	0.027	0.06	0.028	D	1.6	1.6	2.4	0.043	0.096	0.070	1a
Allen	0.031	0.07	0.032	D	1.6	1.6	2.4	0.050	0.112	0.080	1b
Ascension	0.029	0.065	0.03	E (F)	2.5	2.5	3.5	0.073	0.163	0.110	1b
Assumption	0.027	0.058	0.027	E (F)	2.5	2.5	3.5	0.068	0.145	0.090	1b
Beauregard	0.03	0.067	0.03	D	1.6	1.6	2.4	0.048	0.107	0.070	1a
Bienville	0.043	0.1	0.044	C	1.2	1.2	1.7	0.052	0.120	0.070	1b
Bossier	0.044	0.101	0.044	E	2.5	2.5	3.5	0.110	0.253	0.150	1b
Caddo	0.042	0.096	0.042	E	2.5	2.5	3.5	0.105	0.240	0.150	1b
Calcasieu	0.027	0.06	0.027	E	2.5	2.5	3.5	0.068	0.150	0.090	1b
Caldwell	0.042	0.098	0.044	E	2.5	2.5	3.5	0.105	0.245	0.150	1b
Cameron	0.025	0.056	0.026	E (F)	2.5	2.5	3.5	0.063	0.140	0.090	1b
Catahoula	0.039	0.091	0.042	E (F)	2.5	2.5	3.5	0.098	0.228	0.150	1b
Claiborne	0.049	0.114	0.048	C	1.2	1.2	1.7	0.059	0.137	0.080	1b
Concordia	0.037	0.086	0.04	E (F)	2.5	2.5	3.5	0.093	0.215	0.140	1b
Desoto	0.037	0.084	0.037	C	1.2	1.2	1.7	0.044	0.101	0.060	1a
East Baton Rouge	0.031	0.069	0.032	E	2.5	2.5	3.5	0.078	0.173	0.110	1b
East Carroll	0.058	0.138	0.056	E (F)	2.5	2.5	3.5	0.145	0.345	0.200	2
East Feliciana	0.041	0.094	0.041	D	1.6	1.6	2.4	0.066	0.150	0.100	1b
Evangeline	0.029	0.065	0.031	E	2.5	2.5	3.5	0.073	0.163	0.110	1b
Franklin	0.048	0.115	0.049	E	2.5	2.5	3.5	0.120	0.288	0.170	2
Grant	0.037	0.085	0.039	D	1.6	1.6	2.4	0.059	0.136	0.090	1b
Iberia	0.026	0.058	0.027	E (F)	2.5	2.5	3.5	0.065	0.145	0.090	1b
Iberville	0.029	0.065	0.03	E (F)	2.5	2.5	3.5	0.073	0.163	0.110	1b
Jackson	0.044	0.103	0.045	C	1.2	1.2	1.7	0.053	0.124	0.080	1b
Jefferson	0.027	0.059	0.027	E (F)	2.5	2.5	3.5	0.068	0.148	0.090	1b
Jefferson Davis	0.028	0.062	0.029	D	1.6	1.6	2.4	0.045	0.099	0.070	1a

Louisiana Seismic Design Information Table (Continued)

Parish	PGA	S_s	S_1	Site Class	F_{pga}	F_a	F_v	$A_s=F_{pga}$ PGA	$S_{DS}=F_a S_s$	$S_{D1}=F_v S_1$	Zone
Lafayette	0.028	0.061	0.029	E (F)	2.5	2.5	3.5	0.070	0.153	0.100	1b
Lafourche	0.026	0.057	0.026	E (F)	2.5	2.5	3.5	0.065	0.143	0.090	1b
LaSalle	0.039	0.091	0.041	E	2.5	2.5	3.5	0.098	0.228	0.140	1b
Lincoln	0.048	0.113	0.048	C	1.2	1.2	1.7	0.058	0.136	0.080	1b
Livingston	0.031	0.068	0.031	E	2.5	2.5	3.5	0.078	0.170	0.110	1b
Madison	0.049	0.116	0.049	E (F)	2.5	2.5	3.5	0.123	0.290	0.170	2
Morehouse	0.061	0.144	0.057	E	2.5	2.5	3.5	0.153	0.360	0.200	2
Natchitoches	0.038	0.088	0.04	E	2.5	2.5	3.5	0.095	0.220	0.140	1b
Orleans	0.028	0.06	0.028	E (F)	2.5	2.5	3.5	0.070	0.150	0.100	1b
Ouachita	0.048	0.114	0.049	D	1.6	1.6	2.4	0.077	0.182	0.120	1b
Plaquemines	0.026	0.057	0.027	E (F)	2.5	2.5	3.5	0.065	0.143	0.090	1b
Pointe Coupee	0.031	0.07	0.033	E (F)	2.5	2.5	3.5	0.078	0.175	0.120	1b
Rapides	0.033	0.077	0.036	E	2.5	2.5	3.5	0.083	0.193	0.130	1b
Red River	0.039	0.091	0.04	E	2.5	2.5	3.5	0.098	0.228	0.140	1b
Richland	0.048	0.115	0.049	E	2.5	2.5	3.5	0.120	0.288	0.170	2
Sabine	0.036	0.081	0.035	C	1.2	1.2	1.7	0.043	0.097	0.060	1a
St. Bernard	0.027	0.059	0.026	E (F)	2.5	2.5	3.5	0.068	0.148	0.090	1b
St. Charles	0.027	0.06	0.028	E (F)	2.5	2.5	3.5	0.068	0.150	0.100	1b
St. Helena	0.032	0.073	0.034	D	1.6	1.6	2.4	0.051	0.117	0.080	1b
St. James	0.028	0.062	0.028	E (F)	2.5	2.5	3.5	0.070	0.155	0.100	1b
St. John	0.028	0.062	0.028	E (F)	2.5	2.5	3.5	0.070	0.155	0.100	1b
St. Landry	0.028	0.064	0.03	E (F)	2.5	2.5	3.5	0.070	0.160	0.110	1b
St. Martin	0.028	0.061	0.029	E (F)	2.5	2.5	3.5	0.070	0.153	0.100	1b
St. Mary	0.026	0.057	0.027	E (F)	2.5	2.5	3.5	0.065	0.143	0.090	1b
St. Tammany	0.031	0.069	0.032	E	2.5	2.5	3.5	0.078	0.173	0.110	1b
Tangipahoa	0.032	0.073	0.034	D	1.6	1.6	2.4	0.051	0.117	0.080	1b
Tensas	0.043	0.1	0.045	E (F)	2.5	2.5	3.5	0.108	0.250	0.160	2

Louisiana Seismic Design Information Table (Continued)

Parish	PGA	S_s	S_1	Site Class	F_{pga}	F_a	F_v	$A_s=F_{pga}$ PGA	$S_{DS}=F_a S_s$	$S_{D1}=F_v S_1$	Zone
Terrebonne	0.024	0.053	0.025	E (F)	2.5	2.5	3.5	0.060	0.133	0.090	1b
Union	0.055	0.13	0.053	C	1.2	1.2	1.7	0.066	0.156	0.090	1b
Vermilion	0.025	0.056	0.026	E (F)	2.5	2.5	3.5	0.063	0.140	0.090	1b
Vernon	0.033	0.073	0.033	C	1.2	1.2	1.7	0.040	0.088	0.060	1a
Washington	0.033	0.074	0.035	D	1.6	1.6	2.4	0.053	0.118	0.080	1b
Webster	0.047	0.109	0.046	D	1.6	1.6	2.4	0.075	0.174	0.110	1b
West Baton Rouge	0.03	0.067	0.031	E (F)	2.5	2.5	3.5	0.075	0.168	0.110	1b
West Carroll	0.059	0.14	0.056	E	2.5	2.5	3.5	0.148	0.350	0.200	2
West Feliciana	0.031	0.071	0.033	D	1.6	1.6	2.4	0.050	0.114	0.080	1b
Winn	0.04	0.093	0.042	C	1.2	1.2	1.7	0.048	0.112	0.070	1a

3.10.5—Operational Classification

The following shall supplement *A3.10.5*.

All bridges shall be classified as "Other Bridges," except those on the National Highway System where no detour exists within 5 miles shall be classified as "Essential Bridges." Critical Bridges may be classified at the direction of the Bridge Design Engineer Administrator for specific projects.

3.10.8—Combination of Seismic Force Effects

The following shall replace last paragraph of *A3.10.8*.

Plastic hinging of the columns as specified in *A3.10.9.4.3* is not allowed as a basis for seismic design.

3.12—FORCE EFFECTS DUE TO SUPERIMPOSED DEFORMATIONS: *TU, TG, SH, CR, SE, PS*

3.12.2—Uniform Temperature

The following shall replace *A3.12.2*.

For all bridge types, design value for thermal movement associated with uniform temperature change shall be calculated according to *D.3.12.2.1*.

3.12.2.1—Temperature Range for Procedure A

The following shall replace *A3.12.2.1*.

Base construction temperature assumed in design shall be taken as 68°F and the ranges of temperature shall be as specified below:

C3.12.2.1

The following shall supplement *AC3.12.2.1*.

Defined ranges of temperature variation are based on research of Louisiana weather data from 2000 to 2012. The temperature range study report is included in *BDEM, Part IV*.

Design Temperature Range Table

Material	Temperature Range	Rise	Fall	Minimum Temperature	Maximum Temperature
Concrete Girder Bridges	85°F	35°F	50°F	18°F	103°F
Steel Girder Bridges	120°F	52°F	68°F	0°F	120°F

The "rise" and "fall" temperature changes (or the difference from maximum and minimum temperature to base construction temperature) shall be used for thermal deformation effects, however, for design of integral abutments, temperature range (or the difference of the maximum and minimum temperature) shall be used to calculate thermal deformation effects, as the temperature when abutments are constructed may be at the extreme low or the extreme high.

Minimum and maximum temperatures shall be taken as $T_{MinDesign}$ and $T_{MaxDesign}$ in *Eq. A3.12.2.3-1*.

3.12.2.3—Design Thermal Movement

The following shall supplement *A3.12.2.3*.

Coefficients of thermal expansion for concrete and steel are defined in *A5.4* and *A6.4*.

Thermal movements and forces due to restraint from movement shall be considered in all directions.

Force effects resulting from thermal movement at bearings shall be considered in the substructure design, including piles.

Horizontal forces and moments induced in the bridge by restraint of movement at bearings shall be determined in accordance with *A14.6.3*.

C3.12.2.3

The following shall supplement *AC3.12.2.3*.

Note that a given temperature change causes thermal movement in all directions. Because thermal movement is a function of expansion length, a short, wide bridge (for example, a wide and continuous slab span bridge) may experience greater transverse stress than longitudinal stress.

3.12.3—Temperature Gradient

C3.12.4

Past experience in Louisiana has shown that neglecting temperature gradient in the design of continuous concrete and steel girder bridges has not lead to structural distress. In the case of continuous segmental girder bridges the stresses due to the temperature gradient could be significant and should be considered in the design.

3.12.5—Creep

The following shall supplement *A3.12.5*.

The following values shall be used in lieu of AASHTO provisions for estimating movements due to shrinkage and creep:

- 1 inch per 325 feet for concrete prestressed girder bridges (For continuous deck concrete prestressed girder spans, a reduction factor of 0.5 shall be applied.)

C3.12.5

The following shall supplement *C3.12.5*.

This design criterion is based on past LADOTD experience.

- ½ inch per 325 feet for steel girder bridges

For other structures not listed, AASHTO provisions shall be followed.

3.14—VESSEL COLLISION

3.14.1—General

The following shall supplement *A3.14.1*.

Refer to *D2.3.2.2.5* for additional information on design policies for vessel collisions.

The definition of navigational waterways can be found in the bridge permits section of the U.S. Coast Guard website.

The following two vessel collision events shall be evaluated for Extreme II and V Limit States in accordance with Table 3.4.1-1.

- A drifting empty barge breaking loose from its moorings and striking the bridge. Water surface velocity and corresponding water level shall be associated with the maximum historical flood event, but no less than the 100-year flood event. This information shall be determined by the Hydraulic Engineer.
- A ship or barge tow striking the bridge while transiting the navigation channel under typical waterway conditions. Water surface velocity and corresponding water level shall be taken as the maximum values anticipated in which navigation is permitted. This water level is sometimes referred to as the 2% flow line. In absence of this data, values can be determined based on the 50-year flood event. This information shall be determined by the Hydraulic Engineer.

3.14.2—Owner's Responsibility

The following shall supplement *A3.14.2*.

Bridge operational classification shall be established by the Bridge Design Engineer Administrator based on current data.

Vessel collision risk assessment studies for major navigable waterways in Louisiana have been previously performed and information may be available. Contact LADOTD for navigable waterway information.

3.14.3—Operational Classification

The following shall supplement *A3.14.3*.

All bridges shall be designed as "regular" unless defined by the Bridge Design Engineer Administrator as "critical".

3.14.5—Annual Frequency of Collapse

3.14.5.3—Geometric Probability

The following shall supplement *A3.14.5.3*.

Bridge components located beyond 3 times LOA from centerline of the vessel transit path or beyond edge of the waterway do not need to be included in the analysis other than the minimum impact requirement of *A3.14.1*. When waterway width is less than 6 times LOA, the standard deviation of normal distribution to model the sailing path of an aberrant vessel can be taken as one sixth of waterway width.

3.14.6—Design Collision Velocity

The following shall supplement *A3.14.6*.

V_{MIN} shall be taken as the water surface velocity as specified in *D3.14.1* for two vessel collision events.

3.14.13—Damage at Extreme Limit State

The following shall replace *A3.14.13*.

All bridges shall be designed to withstand the impact loads in an elastic manner. Deviation from this policy shall be approved by the Bridge Design Engineer Administrator on a case-by-case basis. Refer to *D2.3.2.2.5* for additional information on design policy for vessel collisions.

3.14.14—Application of Impact Force

3.14.14.1 - Substructure Design

The following shall supplement *A3.14.14.1*.

All columns shall be protected or safeguarded from ship and barge bow collision forces by providing strut walls, raising footings or other

means. For consistency, all columns shall have protection to the same elevation. Refer to *D.3.14.1* for additional information on the water level to be used for two vessel collision events. Elevation for column protection shall be determined based on the most critical water level.

3.14.16—Security Considerations

The following shall supplement *A3.14.16*.

Intentional vessel collision event shall not be considered in design unless requested by the Bridge Design Engineer Administrator for specific projects.

3.16—REFERENCES

Guide Design Specifications for Bridge Temporary Works, Latest Edition, American Association of State Highway and Transportation Officials, Washington, DC.

Guide Specification for Bridges Vulnerable to Coastal Storms, Latest Edition, American Association of State Highway and Transportation Officials, Washington, DC.

Design of Highway Bridges for Extreme Events, NCHRP Report 489, Latest Edition, Transportation Research Board, Washington, DC.

CHAPTER 4 – STRUCTURAL ANALYSIS AND EVALUATION

TABLE OF CONTENTS

4.2—DEFINITIONS 1
4.4—ACCEPTABLE METHODS OF STRUCTURAL ANALYSIS 1
4.5—MATHEMATICAL MODELING 2
4.5.1—General 2
4.6—STATIC ANALYSIS 2
4.6.2—Approximate Methods of Analysis 2
4.6.2.1—Decks 2
4.6.2.1.1—General 2
4.6.2.1.2—Applicability 2
4.6.2.1.3—Width of Equivalent Strip 3
4.6.2.1.4b—Longitudinal Edges 3
4.6.2.1.4c—Transverse Edges 3
4.6.2.1.9—Inelastic Analysis 4
4.6.2.2—Beam Slab Bridges 4
4.6.2.2.1—Applications 4
4.6.2.2.4—Curved Steel Bridges 5
4.6.2.3—Equivalent Strip Width for Slab-Type Bridges 5
4.6.4—Redistribution of Negative Moments in Continuous Beam Bridges 6
4.7—DYNAMIC ANALYSIS 6
4.7.1—Basic Requirements of Structural Dynamics 6
4.7.1.1—General 6
4.7.4—Analysis for Earthquake Loads 6
4.7.4.4—Minimum Support Length Requirements 6
4.8—ANALYSIS BY PHYSICAL MODELS 6
4.8.1—Scale Model Testing 6
4.9—REFERENCES 7

LIST OF FIGURES

Definition of Skew Angle 1
Longitudinal Edge Strip 3
Transverse Edge Strip 4

4.2—DEFINITIONS

The following shall supplement *A 4.2*.

Skew Angle—Angle between centerline of support and a line normal to roadway centerline as shown.

(Special note: LADOTD historically showed skew angle as the angle between center of roadway and centerline of support; this has been modified as indicated above to conform with the definition in *AASTHO LRFD Specifications*.)

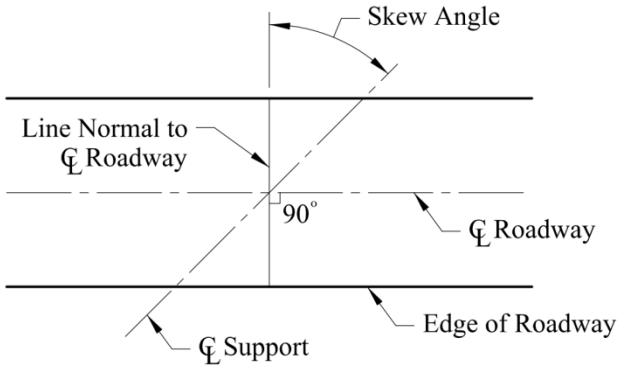

Definition of Skew Angle

4.4—ACCEPTABLE METHODS OF STRUCTURAL ANALYSIS

The following shall supplement *A4.4*.

LADOTD only allows use of pre-approved computer programs in design and load rating of bridges. A list of pre-approved software is posted on LADOTD Bridge Design website.

If any other software is needed, a synopsis of the software shall be submitted to the Bridge Design Engineer Administrator for approval prior to use. Synopsis shall include name of software and developer, a general description of functions, a certification from software developer stating that it is maintained in accordance with the latest *AASHTO LRFD Bridge Design Specifications*, and an account of requester's experience and experience of other organizations or agencies that use the software. Data/results from in-house software will not be accepted as part of the deliverable. The cost of software shall be included in overhead cost of the firm and not be a direct expense for projects.

Use of computer programs does not relieve

EOR's responsibilities to ensure the correctness of the results.

4.5—MATHEMATICAL MODELING

4.5.1—General

The following shall replace the second paragraph of *A4.5.1*.

For new bridges, analysis based on continuous composite barriers is not permitted. Consideration of continuous composite barriers, if needed, shall be only limited to structural evaluations and bridge rehabilitations with prior approval of the Bridge Design Engineer Administrator.

4.6—STATIC ANALYSIS

4.6.2—Approximate Methods of Analysis

4.6.2.1—Decks

4.6.2.1.1—General

The following shall replace the last paragraph of *A4.6.2.1.1*.

Where strip method is used, extreme positive moment in any deck panel between girders shall be assumed to apply to all positive moment regions. Similarly, the extreme negative moment over any interior beam or girder shall be assumed to apply to all interior negative moment regions.

The extreme negative moment over exterior girders and deck overhangs shall be determined per *A9* and *A13* for the wheel load and vehicle collision load. Reinforcing steel in the overhang portion of the deck shall also meet the crash tested and approved bridge railing details. In situations where such details vary from the dimensions or shapes of crash tested barriers and deck combination, the amount of reinforcing steel in the deck shall produce equal or greater strength than those produced in the crash test.

4.6.2.1.2—Applicability

The following shall replace *A4.6.2.1.2*.

Decks containing prefabricated elements must be designed and use of any design aids in lieu of

C4.6.2.1.1

The following shall supplement *AC4.6.2.1.1*.

Equivalent strip method may be used for skewed deck layouts. The span length is always to be taken perpendicular to the supporting girder lines. Detailing requirements in *A9.7.1.3* should be applied to skewed decks.

analysis is not permitted.

For slab bridges and concrete slabs spanning more than 15.0 ft. in which the span is primarily in the direction parallel to traffic, provisions of *A4.6.2.3* and *A4.6.2.1.4b* shall apply to the design of interior strips and edge strips, respectively. Otherwise, provisions of *A4.6.2.1.3* and *A4.6.2.1.4* shall apply.

4.6.2.1.3—Width of Equivalent Strip

C4.6.2.1.3

The following shall supplement *AC4.6.2.1.3*.

All decks with lines of support normal to traffic are considered to span in the direction parallel to traffic, such as decks that are supported by transverse floor beams. All decks with lines of support parallel to traffic are considered to span in the transverse direction, such as decks supported by girders parallel to traffic.

4.6.2.1.4b—Longitudinal Edges

The following shall replace the second paragraph of *A4.6.2.1.4b*.

Where decks span primarily in the direction of traffic, the effective width of the longitudinal edge strip, EW_{EDGE}, as shown in the diagram below, may be taken as the sum of the distance between the edge of the deck and inside face of the barrier, plus 12.0 in., plus one-quarter of the strip width, specified in either *A4.6.2.1.3*, *A4.6.2.3*, or *A4.6.2.10*, as appropriate. EW_{EDGE} shall not exceed one-half of the full strip width or 72.0 inches, whichever is smaller.

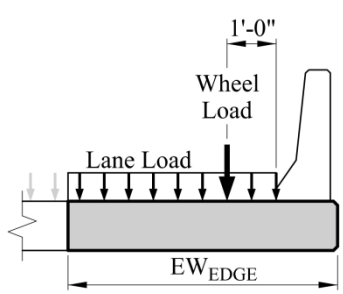

Longitudinal Edge Strip

4.6.2.1.4c—Transverse Edges

The following shall replace the second paragraph of *A4.6.2.1.4c*.

Effective width of the transverse edge strip, EW_{EDGE}, as shown in the Plan View and Section A-A below, may be taken as sum of distance "d" between the transverse edge of the deck and the centerline of first line of support for the deck, plus one-half of strip width as specified in *A4.6.2.1.3*. EW_{EDGE} shall not exceed the full strip width specified in *A4.6.2.1.3*.

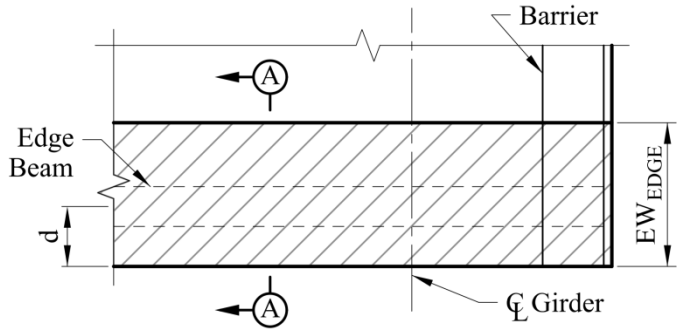

Plan View

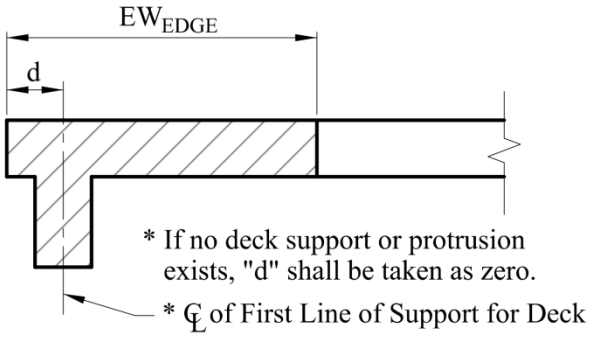

Section A-A

Transverse Edge Strip

4.6.2.1.9—Inelastic Analysis

The following shall replace *A4.6.2.1.9*.

Inelastic finite element analysis or yield line theory is not allowed for deck design. Exceptions must be approved by the Bridge Design Engineer Administrator.

4.6.2.2—Beam Slab Bridges

4.6.2.2.1—Applications

The following shall supplement *A4.6.2.2.1*.

C4.6.2.2.1

The following shall supplement *AC4.6.2.2.1*.

For bridges with variable or flared girder spacing, the girder spacing, "S", used to determine the live load distribution factors shall be as follows:

S_{max} = maximum girder spacing

S_{min} = minimum girder spacing

When $S_{max}/S_{min} \leq 1.4$,

$S = (2/3)S_{max} + (1/3)S_{min}$

When $S_{max}/S_{min} > 1.4$, refined analysis shall be used.

For Louisiana precast/prestressed concrete quad-beam sections, calculate the distribution factor based on Type k as defined in *A4.6.2.2.1, Table 4.6.2.2.1-1*.

Where design parameters exceed the limits specified in *A4.6.2.2.1, Table 4.6.2.2.2b-1,* the distribution factors shall be calculated based on refined analysis.

The most commonly used refined analysis models are the 2-D grillage model and the 3-D finite element (FE) model. One of the conclusions of NCHRP study 12-26 (*NCHRP Report 592*) is that 3-D (FE model) analyses provide no additional value over less rigorous 2-D (grillage model) analyses. Therefore, it is recommended to use the 2-D grillage model unless the 3-D FE model is deemed necessary.

4.6.2.2.4—Curved Steel Bridges

The following shall replace *A4.6.2.2.4*.

Approximate analysis methods for curved steel bridges such as those referred to in *A4.6.2.2.4* are not permitted.

C4.6.2.2.4

The following shall replace *AC4.6.2.2.4*.

The main effect of horizontal curvature on steel superstructures is twofold. First, steel girders that are fabricated on horizontal curves tend to overturn under their own self weight. This tendency causes dead and live loads to be transferred transversely, which translates into some girders carrying a larger portion of the applied loads than others. Second, curvature of superstructures subjects the steel girders to torsional moments that are mainly resisted by horizontal shear in the flanges. Horizontal shear generates moments in the flanges, which increases, or reduces, the stresses from vertical bending. Both effects should be considered in the design of horizontally curved steel bridges using refined analysis methods.

4.6.2.3—Equivalent Strip Width for Slab-Type Bridges

The following shall supplement *A4.6.2.3*.

Equivalent strip width given in *A4.6.2.3* shall be used for typical interior strips only and is not to be used for edge strips. Width of edge strips shall be taken as specified in *A4.6.2.1.4b and D4.6.2.1.4b*.

4.6.4—Redistribution of Negative Moments in Continuous Beam Bridges

The following shall replace *A4.6.4*.

Negative moment redistribution is not allowed in design or load rating of continuous bridges without prior approval of the Bridge Design Engineer Administrator.

4.7—DYNAMIC ANALYSIS

4.7.1—Basic Requirements of Structural Dynamics

4.7.1.1—General

The following shall supplement *A4.7.1.1*.

Dynamic analysis may be required at the request of the Bridge Design Engineer Administrator in cases of flexible continuous bridges which may be especially susceptible to vibrations.

4.7.4—Analysis for Earthquake Loads

4.7.4.4—Minimum Support Length Requirements

The following shall supplement *A4.7.4.4*.

Minimum support length, "N", shall be measured from end of the elements to be supported, such as beams, girders or slabs, to edge of the top most supporting element, such as risers or bent caps if no risers.

4.8—ANALYSIS BY PHYSICAL MODELS

4.8.1—Scale Model Testing

The following shall supplement *A4.8.1*.

The Bridge Design Engineer Administrator may require scale model testing for complex structures or where refined or dynamic methods of analysis were used.

4.9—REFERENCES

NCHRP Report 592, Simplified Live Load Distribution Factor Equations, Transportation Research Board, Washington, DC, 2012.

CHAPTER 5 – CONCRETE STRUCTURES

TABLE OF CONTENTS

5.4—MATERIAL PROPERTIES 1
5.4.1—General 1
5.4.2—Normal Weight and Structural Lightweight Concrete 1
5.4.2.1—Compressive Strength 1
5.4.2.3—Shrinkage and Creep 1
5.4.3—Reinforcing Steel 1
5.4.3.1—General 1
5.4.4—Prestressing Steel 2
5.4.4.1—General 2
5.4.5—Post-Tensioning Anchorages and Couplers 2
5.4.6—Ducts 2
5.5.4.2—Resistance Factors 2
5.5.4.2.2— Segmental Construction 3
5.6—DESIGN CONSIDERATIONS 3
5.6.3—Strut-and-Tie Model 3
5.6.3.1— Strut-and-Tie Model 3
5.7— DESIGN FOR FLEXURAL AND AXIAL FORCE EFFECTS 3
5.7.3—Flexural Members 3
5.7.3.4—Control of Cracking by Distribution of Reinforcement 3
5.7.3.5—Moment Redistribution 4
5.7.3.6—Deformations 4
5.7.3.6.2— Deflection and Camber 4
5.8— SHEAR AND TORSION 6
5.8.2— General Requirements 6
5.8.2.7—Maximum Spacing of Transverse Reinforcement 6
5.8.3.4—Procedures for Determining Shear Resistance 6
5.9— PRESTRESSING AND PARTIAL PRESTRESSING 7
5.9.4—Stress Limits for Concrete 7
5.9.4.2—For Stresses at Service Limit State after Losses-Fully Prestressed Components 7

5.9.4.2.2—Tension Stresses 7
5.10.3— Spacing of Reinforcement 7
5.10.3.3— Minimum Spacing of Prestressing Tendons and Ducts 7
5.10.3.3.1—Pretensioning Strand 7
5.11—DEVELOPMENT AND SPLICES OF REINFORCEMENT 7
5.11.4—Development of Prestressing Strand 7
5.11.4.3—Partially Debonded Strands 7
5.12—DURABILITY 8
5.12.1—General 8
5.12.3— Concrete Cover 8
5.12.4—Protective Coatings 9
5.13—SPECIFIC MEMBERS 9
5.13.2—Diaphragms, Deep Beams, Brackets, Corbels and Beam Ledges 9
5.13.2.2—Diaphragms 9
5.13.4—Concrete Piles 10
5.13.4.4—Precast Prestressed Piles 10
5.14—PROVISIONS FOR STRUCTURE TYPES 10
5.14.1—Beams and Girders 10
5.14.1.2—Precast Beams 10
5.14.1.4—Bridges Composed of Simple Span Precast Girders Made Continuous 13

LIST OF TABLES

Concrete Cover Table 8
Policy for Intermediate Diaphragms 9
Girder Maximum Span Length Table 12

LIST OF FIGURES

Environmental Exposure Map 4
Spans on Curve 10

5.4—MATERIAL PROPERTIES

5.4.1—General

The following shall replace *A5.4.1*.

All structural concrete classes and associated material properties shall conform to Section 901 of *Standard Specifications*.

C5.4.1

The following shall replace *AC5.4.1*.

All materials and tests shall conform to *LADOTD Standard Specifications for Roads and Bridges.*

5.4.2—Normal Weight and Structural Lightweight Concrete

5.4.2.1—Compressive Strength

The following shall supplement *A5.4.2.1*.

Lightweight concrete shall not be used without prior review and approval of the Bridge Design Engineer Administrator.

C5.4.2.1

The following shall replace *AC5.4.2.1.*

All materials and tests shall conform to *LADOTD Standard Specifications for Roads and Bridges.*

5.4.2.3—Shrinkage and Creep

The following shall supplement *A5.4.2.3*.

See *D3.12.5* for additional provisions for estimating movements due to shrinkage and creep.

5.4.3—Reinforcing Steel

5.4.3.1—General

The following shall replace the first paragraph of *A5.4.3.1.*

Reinforcing bars, deformed wire, cold-drawn wire, welded plain wire fabric, and welded deformed wire fabric shall conform to the material standards specified in *Standard Specifications*, or as amended by Supplemental Specifications and/or Project Special Provisions.

Steel materials shall be Grade 60 in accordance with *Standard Specification*. Grade 75 reinforcing steel is allowed for common use in Welded Wire Fabric (WWF). Grade 40 reinforcing steel shall not be used without prior review and approval of the Bridge Design Engineer Administrator.

Epoxy coated reinforcing steel shall not be specified.

Galvanized, stainless, stainless clad, low-carbon

C5.4.3.1

The following shall replace *AC5.4.3.1.*

The general policy is to use uncoated, “black” reinforcing steel with high performance concrete with low permeability and an increased concrete cover for corrosion protection.

Additional measures for corrosion protection may be specified by the Bridge Design Engineer Administrator on a case by case basis for bridges located in coastal areas that are deemed of higher importance.

chromium (ASTM A1035/A1035M), or any type other than ASTM A615 "black" reinforcing steel shall not be specified without prior review and approval of the Bridge Design Engineer Administrator.

5.4.4—Prestressing Steel

5.4.4.1—General

The following shall replace *A5.4.4.1*.

The preferred diameter of prestressing strands is 0.6 in.

Use of 0.5 in. diameter strands is acceptable.

The use of 0.375 in. diameter strands in the top flange of prestressed concrete girders to assist in supporting stirrups and controlling temperature shrinkage is acceptable. The use of 0.375 in. diameter strands as primary strands for special circumstances shall be approved by the Bridge Design Engineer Administrator.

Prestressing steel shall be low relaxation strand Grade 270.

Stress-relieved (normal relaxation) strands shall not be allowed.

High-strength steel bars shall be ASTM A722 Type 1 (Plain) or Type 2 (Deformed) Grade 150.

5.4.5—Post-Tensioning Anchorages and Couplers

The following shall supplement *A5.4.5*.

Use of strand couplers is not allowed.

5.4.6—Ducts

The following shall supplement *A5.4.6*.

Special provisions for ducts shall be prepared in accordance with industry best practices and recommendations from PTI, ASBI, FHWA and other applicable research. Special provisions shall be reviewed and approved by the Bridge Design Engineer Administrator.

C5.4.6

Applicable industry research publications:

- *PTI M55.1-03—Specification for Grouting of Post-Tensioned Structures*, second edition; Post-Tensioning Institute, Farmington Hills, MI. April 2003.
- *Federal Highway Administration—Post-Tensioning Tendon Installation and Grouting Manual*, Washington DC, May 2004.
- *VSL International LTD.—Grouting of Post - Tensioning Tendons* , Lyssach, Switzerland, May 2002.

5.5.4.2—Resistance Factors

5.5.4.2.2— Segmental Construction

The following shall supplement *A5.5.4.2.2.*

Unbonded post-tensioning systems are not allowed unless approved by the Bridge Design Engineer Administrator for special cases.

5.6—DESIGN CONSIDERATIONS

5.6.3—Strut-and-Tie Model

5.6.3.1— Strut-and-Tie Model

C5.6.3.1

The following shall supplement *AC5.6.3.1.*

Typical situations in which the strut-and-tie model should be used for the design of elements include hammerhead pier cap cantilevers, near the supports of pile and column bent caps, and shear-to-bearing load transfer at the ends of prestressed and reinforced concrete beams.

5.7— DESIGN FOR FLEXURAL AND AXIAL FORCE EFFECTS

5.7.3—Flexural Members

5.7.3.4—Control of Cracking by Distribution of Reinforcement

The following shall supplement *A5.7.3.4.*

The maximum value of d_c shall be taken as 2.0 inches plus the radius of flexural reinforcement closet to the tension fiber.

Class 2 exposure conditions shall be applied to structures located in the coastal zone and in northern areas where deicing salt is frequently used. The environment exposure map below identifies areas where Class 2 exposure condition shall be applied. Class 1 exposure shall be applied to all other areas.

C5.7.3.4

The following shall supplement *AC5.7.3.4.*

For the value of d_c, all concrete cover greater than 2 inches is considered to be "sacrificial" concrete that is provided to address durability under severely corrosive exposure conditions or for wearing surface.

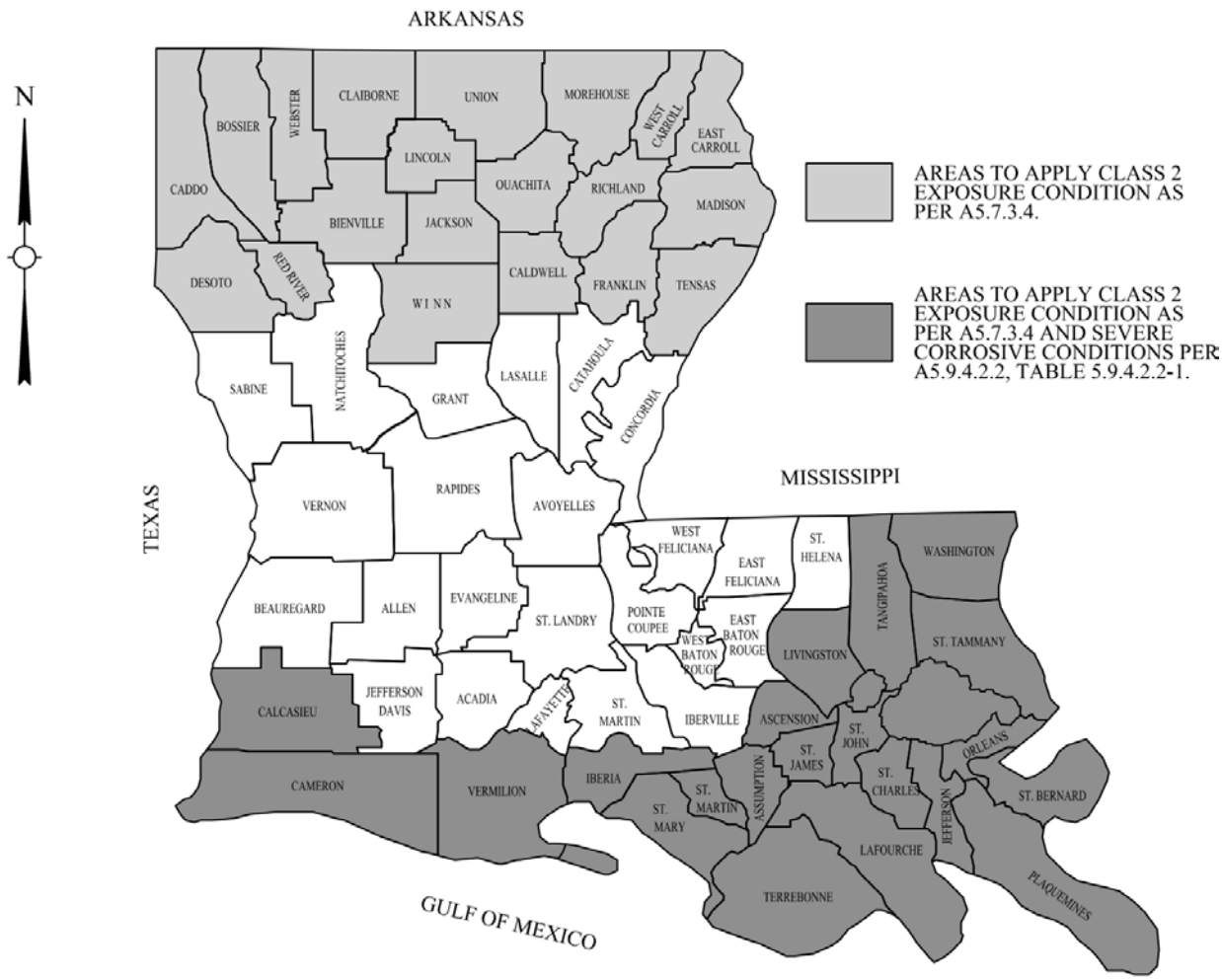

Environmental Exposure Map

5.7.3.5—Moment Redistribution

The following shall replace *A5.7.3.5*.

Redistribution of negative moments is not allowed as stated in *D4.6.4*.

C5.7.3.5

The following shall replace *AC5.7.3.5*.

The result of such redistribution is not significant, but the methodology can result in unintentional miscalculation of negative and positive moment requirements.

5.7.3.6—Deformations

5.7.3.6.2— Deflection and Camber

The following shall supplement *A5.7.3.6.2*.

Camber and deflection in prestressed concrete girders shall be computed as follows:

Step 1: Determine initial camber (C1, upward) due

C5.7.3.6.2

The following shall supplement *AC5.7.3.6.2*.

Accurate predictions of camber and deflection are difficult due to many factors including, but not limited to:

to prestress force at transfer. The modulus of elasticity of concrete at transfer and the girder casting length shall be used.

Step 2: Determine deflection at transfer (D_1, downward) due to girder self-weight. The modulus of elasticity of concrete at transfer and the girder design span shall be used.

Step 3: Determine estimated camber at erection (C_2, upward) due to prestress force and the girder self-weight using PCI multipliers of 1.80 for camber due to prestress at transfer and 1.85 for deflection due to girder self-weight at transfer.

$$C_2 = 1.80C_1 - 1.85D_1$$

Step 4: Determine deflection due to non-composite dead load including deck, diaphragms and haunch weight (D_2, downward).

Step 5: Determine deflection due to composite dead load of barrier weight (D_3, downward). Future wearing surface shall not be included.

Step 6: Determine the total dead load deflection (D_4, downward).

$$D_4 = D_2 + D_3$$

Step 7: Determine the final girder camber (D_5, upward) due to prestress force and dead load.

$$D_5 = C_2 - D_4$$

The calculated final girder camber (D_5) shall be a minimum 1/2" upward and shall not exceed the haunch thickness as specified in *D.5.14.1.2* minus 1/2". These limits give the contractor 1/2" allowance to ensure that the final girder camber will not sag and that the top of the girder will not encroach the deck. The estimated camber at erection (C_2) and the total dead load deflection (D_4) shall be shown in contract plans. The contract plan shall include a note to request the contractor notify the EOR when the field measured camber prior to erection differ by more than +/- 1/2" from the estimated camber at erection (C_2).

- Material property changes with time such as the modulus of elasticity of concrete.
- Creep and shrinkage, are affected by environmental conditions such as ambient relative humidity and temperature. Creep of the concrete is primarily responsible for the camber growth.
- Lifting, handling, storage and shipping of girders typically result in an increased camber, due to instantaneous loss of member weight due to "bouncing" and the position of the support points during storage and shipping being located too far from the girder ends. This subsequently results in an inelastic instantaneous creep of the extreme bottom fiber, therefore a permanent increase in camber.

As discussed in *PCI Bridge Design Manual*, there are three methods for estimating long term camber and deflections. These methods are listed in order of increasing complexity and accuracy:

- multiplier methods
- improved multiplier methods, based on estimates of prestress loss
- detailed analytical methods

For practical purpose, the PCI multiplier method is adopted to calculate the estimated camber at erection provided that initial camber due to prestress and deflection due to girder self-weight at transfer are calculated separately. The use of PCI multipliers has shown to give reasonable estimates for camber at the time of erection. Refer to *PCI Bridge Design Manual* for more discussion on camber prediction.

Actual girder camber at time of casting the deck slab being equal to 2 to 3 times the initial girder camber at release is not uncommon. The amount varies based upon girder type, magnitude of prestress force, age of girder and storage and shipping methods.

For prestressed girder projects in which the contractor elects to fabricate all the girders at the same time but girder placement will extend months after casting (such as for phased construction or very large projects), the contractor will be required to account for camber

growth. Camber for each girder shall be measured prior to erection.

5.8─ SHEAR AND TORSION

5.8.2─ General Requirements

5.8.2.7─Maximum Spacing of Transverse Reinforcement

The following shall supplement *A5.8.2.7*.

For all concrete girders that span existing or future traffic lanes or railroad tracks, the spacing of all transverse reinforcement, including vertical shear reinforcement, stirrups, ties, lower flange reinforcement, etc, shall not exceed 12 inches throughout the full girder length.

Stirrups in all bent caps shall comply with the following spacing requirements:

- The first stirrup shall be placed no more than 3 inches from the face of a pile, drilled shaft, column, or the edge of the cap.
- The spacing between the first stirrup and an adjacent stirrup shall not exceed 6 inches.
- The spacing between all remaining stirrups shall not exceed 12 inches.

5.8.3.4─Procedures for Determining Shear Resistance

The following shall supplement *A5.8.3.4*.

A5.8.3.4.1 shall be used for reinforced concrete sections.

A5.8.3.4.2 shall be used for prestressed concrete sections and reinforced concrete sections that are not covered by *A5.8.3.4.1*.

The same method used for the design shall also be used for the as-designed bridge rating calculations.

C5.8.2.7

The following shall supplement *AC5.8.2.7*.

This design requirement is intended to contain damaged concrete, following vehicle or train collisions, and to prevent spalled concrete from falling on vehicles or trains. This will also provide minimum shear strength to better facilitate temporary shoring following collisions, which may better enable a damaged structure to carry traffic until such time as the structure can be repaired.

5.9— PRESTRESSING AND PARTIAL PRESTRESSING

5.9.4—Stress Limits for Concrete

5.9.4.2—For Stresses at Service Limit State after Losses-Fully Prestressed Components

5.9.4.2.2—Tension Stresses

The following shall supplement *A5.9.4.2.2*.

Severe corrosive conditions referenced in *Table A5.9.4.2.2-1* shall be applied to all structures located in coastal zones as identified on environment exposure map in *D5.7.3.4*. Moderate corrosive conditions shall be applied to all other areas.

For structures located on routes with current ADTT greater than 2500, tensile stress limit in prestressed concrete at service limit state shall be limited to $0.0948\sqrt{f_c'}$.

5.10.3— Spacing of Reinforcement

5.10.3.3— Minimum Spacing of Prestressing Tendons and Ducts

5.10.3.3.1—Pretensioning Strand

The following shall replace *A5.10.3.3.1*.

Strands shall be spaced no less than 2 inches center-to-center regardless of strand size.

Prestressing strands shall be distributed evenly across a row to achieve uniform pretensioning in the girder end zones. Clustering of strands in the bottom corners of beams should be avoided.

Prestressing strands shall not be bundled to touch one another.

C5.10.3.3.1

The following shall replace *AC5.10.3.3.1*.

The 2.00 inch center-to-center spacing has been in effect for many years with successful use by many states, including Louisiana.

5.11—DEVELOPMENT AND SPLICES OF REINFORCEMENT

5.11.4—Development of Prestressing Strand

5.11.4.3—Partially Debonded Strands

The following shall replace *A5.11.4.3*.

Debonding of prestressed strands is not allowed without prior review and approval of the Bridge

Design Engineer Administrator.

Combination of straight and draped strand pattern may be utilized in order to satisfy the allowable stresses at release. If debonding is deemed necessary and approved, then the criteria of *A5.11.4.3* shall apply.

5.12—DURABILITY

5.12.1—General

The following shall supplement *A5.12.1*.

LADOTD's strategy to provide durability for concrete structures consists of a combination of methods: utilizing high performance concrete with permeability/surface resistivity requirements for all structural concrete elements, providing minimum concrete covers, controlling crack width by distribution of reinforcement, specifying water curing procedures in *Standard Specifications*, and providing protective measures and details as specified in *A2.5.2.1* and *D2.5.2.1*.

5.12.3— Concrete Cover

The following shall replace *A5.12.3*.

Concrete Cover for unprotected prestressing and reinforcing steel, which is defined as the distance from the edge of concrete to edge of the nearest reinforcement, shall not be less than that specified in the table below:

Concrete Cover Table

Application	Cover (inches)
All superstructure components unless otherwise specified	2
All substructure components unless otherwise specified	3
Deck / Slab Span / Approach Slab top surfaces for fixed bridges	2.5
Deck top surfaces for movable bridges	1.5
Deck bottom surfaces	1.5
Approach Slab bottom surfaces	2
Barrier Railing, Risers, and Diaphragms	1.5
Top flange and web of precast prestressed girders	1.5
All internal surfaces	1.5
Drilled Shafts greater than or equal to 30” in diameter	6
Drilled Shafts less than 30” in diameter	3
Surfaces cast against earth (excluding Approach Slabs)	4
Concrete Roadway Median Barrier	2

5.12.4—Protective Coatings

The following shall replace *A5.12.4.*

Refer to *D5.4.3.1* for the policy on protective coatings.

5.13—SPECIFIC MEMBERS

5.13.2—Diaphragms, Deep Beams, Brackets, Corbels and Beam Ledges

5.13.2.2—Diaphragms

The following shall supplement *A5.13.2.2*.

Intermediate diaphragms (ID) for precast prestressed concrete girder spans shall be provided as specified in the Policy for Intermediate Diaphragms table. End diaphragms (ED) shall be provided for all precast prestressed concrete girder spans. Both ED and ID shall have a minimum width of 8 inches and shall extend full depth from the bottom of deck to top of girder's bottom flange.

Policy for Intermediate Diaphragms

Situations	Requirement for Intermediate Diaphragms (ID)
All spans unless otherwise specified as follows:	ID is not required.
Case 1: Spans supported by BT-78, LG-25 and Quad Beam under normal loading condition except for Cases 3 and 4	One ID shall be provided at center of span.
Case 2: Spans over roadways, railroads, navigational channels, and water body with anticipated marine traffic under normal loading condition except for Cases 3 and 4	One ID shall be provided at center of span.
Case 3: Spans on curve	One ID shall be provided at the center of the span along the radius line. (See Diagram Below.)
Case 4: Spans subject to wave force, extreme high wind conditions, other anticipated lateral forces, or other unusual loading conditions	Requirement of ID shall be determined for the design condition. Minimum one ID shall be provided.

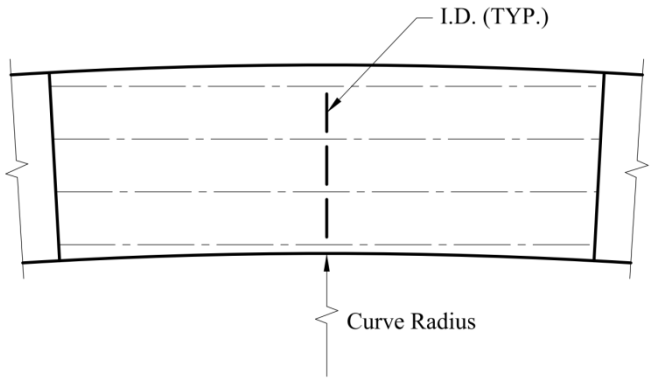

Spans on Curve

5.13.4—Concrete Piles

5.13.4.4—Precast Prestressed Piles

The following shall supplement *A5.13.4.4*.

Refer to LADOTD Bridge Design Special Details for precast prestressed concrete pile details.

5.14—PROVISIONS FOR STRUCTURE TYPES

5.14.1—Beams and Girders

5.14.1.2—Precast Beams

The following shall supplement *A5.14.1.2*.

AASHTO Type II, III, IV, BT-72, BT-78, and Quad Beam are the standard shapes of prestressed concrete girders. Louisiana Girder Shapes LG-25, LG-36, LG-45, LG-54, LG-63, LG-72, and LG-78 are allowed with the approval of the Bridge Design Engineer Administrator. AASHTO Type I and Type IV Modified girders are not allowed.

Value engineering proposals to change LG girders to other girder types are not allowed.

PPC girders maximum span lengths along with the associated maximum prestressing forces immediately prior to transfer are shown in the Girder Maximum Span Length Table.

Girder spacing within a bridge cross-section shall be equal where practical.

The girder types and strand patterns shall be minimized within a project to simplify fabrication. Girders with similar length and loads shall use the same girder type and strand pattern. Refer to *D2.5.2.7.1* for requirements on exterior girder

C5.14.1.2

The following shall supplement *AC5.14.1.2*.

capacity.

Strand pattern details showing strand layouts, number and spacing of strands, concrete cover and edge clearances, and layout of all mild reinforcing steel shall be shown in contract plans. The girder spacing shall not exceed 12.0 feet center-to-center.

The haunch thickness at girder bearing centerline shall be 2 inches for spans less than 90 feet, 3 inches for spans from 90 to 120 feet, and 4 inches for spans greater than 120 feet. Haunch thickness shall be included in weight calculation, but shall be omitted in the calculation of composite section properties used in determining live load effect.

Designers shall pay special attention to the haunch thickness of prestressed girders when they are used in conjunction with a high degree of vertical and horizontal curvature which could present challenges to meeting haunch dimension requirements.

The haunch thickness along the girder due to camber at time of erection and non-composite dead load shall not be less than zero (the top flange of the girders shall not intrude into the deck). Reinforcement shall be provided in haunches exceeding 4 inches in thickness. Girder haunch shall not exceed 6 inches at any location.

PPC girders shall not be used in a curved bridge where the offset between an arc and its chord exceeds 1 foot. Refer to *PCI Bridge Design Manual* for additional design considerations for skewed and curved bridges.

The notes below shall be included in PPC girder detail sheets or general notes sheets for all projects.

"The contractor is responsible for stability of precast prestressed concrete girders during fabrication, storage transportation, erection, and deck placement. Supporting analysis and calculations stamped, signed, and dated by a Louisiana licensed professional engineer and shop drawings showing the method of lifting the girder, lifting locations and details, support (dunnage) locations for storage and transportation details, and erection bracing details shall be submitted to the EOR for review.

Any inherent stability provided by cast-in-place diaphragms shall not be considered by the contractor in designing the required construction bracing. The diaphragms are provided to restrain lateral movement of girders when the bridge is in-service and are not intended or allowed for use as construction stability bracing."

Girder stability during each phase of construction is dependent on the type of lifting equipment and pick up methods and therefore, is the responsibility of the contractor.

For extremely long girders (typically > 160 feet), the contractor may consider using lifting brackets instead of using lifting loops; so that the girder would be lifted from below its center of gravity. The brackets may eliminate the chance of an "off center" lifting which may occur when using lifting loop on the top flange.

During the design process, the EOR shall ensure that all girders, while within the allowable stress

limits, can be supported on dunnage within 3.0 feet from their ends or as calculated.

While girder stability is the contractor's responsibility, during the design process, the EOR shall determine whether the girder can be picked up in accordance with the lateral stability requirements in the *PCI Bridge Design Manual*; however, the pick-up point locations shall not be shown on the contract plans.

During the construction phase, the EOR shall verify that contractor shop drawings and supporting calculations for girder storage, lifting, and handling meet the most current lateral stability analysis procedure provided in the *PCI Bridge Design Manual* to ensure that the proposed girder stability could be achieved within the allowable stress limits listed in the contract plans.

A lateral stability example is provided in the *PCI Bridge Design Manual*.

Girder Maximum Span Length Table

Girder Type	Maximum Span Length (ft.)	Maximum Prestressing Force Immediately Prior to Transfer (kip)	Maximum No. of Strands (Assume 0.6 in. Dia., 270 ksi, Low Relaxation Strands)
LG-25	53	1,408	32
LG-36	98	2,112	48
LG-45	119	2,376	54
LG-54	133	2,464	56
LG-63	154	2,816	64
LG-72	171	3,080	70
LG-78	183	3,344	76
Quad Beam (18.0 in.)	40	704	16
AASHTO Type II (36 in.)	55	750	17
AASHTO Type III (45 in.)	85	1,000	22
AASHTO Type IV (54 in.)	105	1,500	34
BT-72	125	1,850	42
BT-78	140	2,200	50

5.14.1.4—Bridges Composed of Simple Span Precast Girders Made Continuous

The following shall supplement *A5.14.1.4*.

Bridges composed of simple span precast prestressed girders made continuous utilizing positive moment connections are not allowed, due to unsatisfactory past performance of such details.

In an effort to minimize expansion joints for precast prestressed girder bridges, the deck over the supports shall be made continuous to the maximum practical length. Continuous deck over the supports is achieved by providing a continuity diaphragm at the support that is poured in-place with the deck slab. The girder ends shall be embedded in the continuity diaphragm, but applied with a bond breaker to provide some rotational release at the end of girders. Refer to Bridge Design Special Details for more details on the continuity diaphragm.

Precast prestressed girders shall be designed as a simple span for positive moment and shear for all loading conditions without regard to the continuity at the deck. The girders shall also be designed assuming full girder continuity at the support for negative live load moment. Additional reinforcing steel shall be placed at the top of the deck slab to resist the continuous live load negative moment. The longitudinal reinforcement as part of the deck design may be considered in resisting the live load negative moment.

CHAPTER 6 – STEEL STRUCTURES

TABLE OF CONTENTS

6.4—MATERIALS 1
6.4.1—Structural Steels 1
6.4.3—Bolts, Nuts, and Washers 1
6.4.3.1—Bolts 1
6.4.3.5—Load Indicator Devices 2
6.6—FATIGUE AND FRACTURE CONSIDERATIONS 2
6.6.2—Fracture 2
6.7—GENERAL DIMENSION AND DETAIL REQUIREMENTS 3
6.7.2—Dead Load Camber 3
6.7.3—Minimum Thickness of Steel 4
6.7.4—Diaphragms and Cross-Frames 4
6.7.4.1—General 4
6.7.5—Lateral Bracing 6
6.7.5.1—General 6
6.7.5.3—Tub Section Members 6
6.7.7—Heat-Curved Rolled Beams and Welded Plate Girders 6
6.7.7.2—Minimum Radius of Curvature 6
6.7.7.3—Camber 6
6.10—I-SECTION FLEXURAL MEMBERS 7
6.10.1—General 7
6.10.1.1—Composite Sections 7
6.10.1.1.1—Stresses 8
6.10.1.2—Noncomposite Sections 9
6.10.1.6 - Flange stresses and member bending moments 10
6.10.10—Shear Connectors 11
6.10.10.1—General 11
6.10.11—Stiffeners 11
6.10.11.1—Transverse Stiffeners 11
6.10.11.1.1—General 11
6.10.11.2—Bearing Stiffeners 12
6.10.11.2.1—General 12
6.10.11.3—Longitudinal Stiffeners 12
6.10.11.3.1—General 12

6.11—BOX-SECTION FLEXURAL MEMBERS 12
6.11.1—General 12
6.11.1.2—Bearings 12
6.11.11—Stiffeners 13
6.11.11.1—Web Stiffeners 13
6.13—CONNECTIONS AND SPLICES 13
6.13.1—General 13
6.13.2—Bolted Connections 13
6.13.2.1—General 13
6.13.2.1.1—Slip-Critical Connections 13
6.13.2.1.2—Bearing-Type Connections 13
6.13.2.3—Bolts, Nuts, and Washers 14
6.13.2.5—Size of Bolts 14
6.13.2.8—Slip Resistance 14
6.13.3—Welded Connections 14
6.13.3.1—General 14
6.13.5—Connection Elements 15
6.13.5.1—General 15
6.13.6—Splices 15
6.13.6.2—Welded Splices 16
6.16—REFERENCES 16

LIST OF FIGURES

Composite Section Haunch Detail 8
Noncomposite Section Haunch Detail 10

6.4—MATERIALS

6.4.1—Structural Steels

The following shall supplement *A6.4.1*.

From Table 6.4.1-1, specify only Grades 36, 50, 50W, HPS 50W, and HPS 70W. Use of Grade HPS 100W shall be approved by the Bridge Design Engineer Administrator.

Unpainted weathering steel shall be used wherever possible. Use of painted steel shall be approved by the Bridge Design Engineer Administrator.

For plate girders, each field section shall use the same steel classification/yield strength for flanges and web, but the steel classification/yield strength may differ from field section to field section. Use of hybrid girders with different steel classification/yield strength for flanges and web shall be approved by the Bridge Design Engineer Administrator.

C6.4.1

The following shall supplement *AC6.4.1*.

Hybrid girders have been used in the past; however, steel pricing and design and fabrication considerations do not warrant general use. In cases where use is warranted due to unusual circumstances, the designer shall obtain prior approval from the Bridge Design Engineer Administrator.

6.4.3—Bolts, Nuts, and Washers

6.4.3.1—Bolts

The following shall supplement *A6.4.3.1*.

ASTM A490 bolts and bolt diameters greater than 1.125 inches shall not be used unless approved by the Bridge Design Engineer Administrator.

Use ASTM A325, Type 1 bolts for painted connections and Type 3 bolts for unpainted weathering steel connections.

If galvanization is required for the members, all elements of the connection except A490 bolts shall be galvanized. A490 bolts shall not be galvanized and shall be prepared in accordance with *Standard Specifications* when they are specified to connect galvanized parts.

Only one size bolt diameter shall be used for all structural connections of the same type on any specific project. A325 0.875 inch diameter is the most commonly used bolt, which shall be specified

C6.4.3.1

The following shall supplement *AC6.4.3.1*.

ASTM A490 bolts have greater carbon content and are not as ductile as ASTM A325 bolts. The limitations on bolt type and bolt diameter are based on experience that connections should be able to be designed without the need for higher strengths and larger bolt diameters.

Specifying the use of the same bolt diameter in structural connections of the same type on a project reduces the probability of bolts being placed incorrectly in critical connections. The

whenever possible.

Bolts, nuts, washers, and appurtenant items shall also be in accordance with the *Standard Specifications*.

6.4.3.5—Load Indicator Devices

The following shall supplement *A6.4.3.5*.

All bolting for structural steel bridge members shall utilize Direct Tension Indicator (DTI) for installation. With the approval of the Bridge Design Engineer Administrator, other load indicator devices may be considered when rehabilitating connections of existing members where DTI may not be the best installation method. Load indicator devices shall be specified on plans.

C6.4.3.5

The following shall supplement *AC6.4.3.5*.

DTI washers are an excellent alternative to turn-of-the-nut and calibrated torque wrench methods, which are also satisfactory when performed properly; DTI washers are considered easier with respect to installation and less prone to inspection errors.

One example where DTI may not be the best installation method is in the case of rehabilitation of riveted connections where the rivet/bolt holes may be oversized. However, DTIs can still be used effectively in this case by installing a structural plate washer between the hole and the DTI, provided that the plate washer is rigid and does not deform when the bolt is tensioned.

Should the contractor propose to use DTIs which incorporate a self-indicating feature (“squirter”) to signal sufficient bump compression, the engineer may permit their use, provided that pre-installation verification testing, installation, and inspection requirements are all performed in accordance with the *Louisiana Standard Specifications for Roads and Bridges* (latest edition), including using actual bump compression and feeler gage measurements to verify installation tension conformance.

6.6—FATIGUE AND FRACTURE CONSIDERATIONS

6.6.2—Fracture

The following shall supplement *A6.6.2*.

All main-load-carrying structural steel bridge members or portions of members subject to tension or stress reversal require longitudinal Charpy V-notch (CVN) testing.

The locations and lengths of those members or portions of members subject to tension or stress additional material and labor costs are insignificant.

reversal where CVN testing is required shall be clearly stated on the contract plans.

All Fracture Critical Members (FCM) shall be clearly identified on contract plans.

6.7—GENERAL DIMENSION AND DETAIL REQUIREMENTS

6.7.2—Dead Load Camber

The following shall supplement *A6.7.2*.

Provide concrete deck placement sequences, deflections, and girder camber diagrams in contract plans.

The contract plans shall include the following note:

"Alteration of the plan specified deck placement sequence will require the approval of the Engineer of Record. If approved, the contractor shall either hire the original Engineer of Record or a new engineer to prepare the changes to the original design and plan details that are affected by the new deck placement sequences. In the case of hiring a new engineer, the qualifications of the engineer and supporting staff shall be submitted for approval. The revisions to the design and plan details shall be prepared in accordance with LADOTD QC/QA requirements and shall be submitted for verification. The contractor shall be responsible for all associated expenses."

For continuous span units, concrete deck in negative moment regions shall be poured last after a minimum of 7 days from concrete deck pouring of positive moment regions.

Individual deck pours shall be completed within 4 hours with a maximum concrete pouring rate of 60 cubic yard per hour. Higher rates shall be approved by the Bridge Design Engineer Administrator.

For the determination of deflections and camber, a design analysis using a grid, 3-D or finite element method shall be used for superstructure spans with skews greater than 20 degrees, for curved spans, flared spans and for spans with overhangs greater than 6 ft from the centerline of exterior girders.

C6.7.2

The following shall supplement *AC6.7.2*.

Deflections of spans with large skews and of curved spans are more sensitive to large center-to-center girder spacing and warrant utilizing refined analysis.

6.7.3—Minimum Thickness of Steel

The following shall supplement *A6.7.3*.

The minimum thickness of webs for plate girders and box girders shall be 0.5 inch. Web thickness shall be designated in 0.0625 inch increments up to 1.00 inch, inclusive. Web thickness greater than 1.00 inch shall be specified in 0.25 inch increments.

Web plate heights shall be specified in 1.00 inch increments.

The minimum thickness of flanges for plate girders and for top flanges of box girders shall be 0.75 inch. The minimum thickness of the bottom flange for box girders shall be 0.50 inch.

Flange plate widths for plate girders and for top flanges of box girders shall be a minimum of 12.00 inches. All flange plate widths shall be specified in 1.00 inch increments. Flange plate widths shall be designed and detailed as constant within individual field sections of girders (i.e., between field splice locations) when practical while varying the thickness.

The minimum thickness of stiffener plates shall be 0.50 inch.

The design and detailing of girder webs and flanges shall minimize differences in plate thicknesses such that a structural steel fabricator is not required to order small quantities of material.

C6.7.3

The following shall supplement *AC6.7.3*.

The minimum thickness and width dimensions given are selected in order to reduce distortion caused by welding and by heat-treatment for curving during fabrication. The minimum top flange plate width of 12.0 inches is to improve girder stiffness and lateral bracing during handling, shipping and erection.

For general reference in selecting plate dimensions during design and detailing, the availability of plate sizes varies from individual steel mills. The minimum width is typically 48 inches and the maximum width is typically 144 inches. The majority of steel fabricators order maximum width plates appropriate for a project and perform cutting in the shop for economy.

6.7.4—Diaphragms and Cross-Frames

6.7.4.1—General

The following supplements *A6.7.4.1*.

External diaphragms connecting adjacent plate or box girders shall be of either "X-frame" or "K-frame" configurations. All internal diaphragms for box girders shall be of "K-frame" configuration.

External diaphragms shall be bolted to girders at stiffener locations. Internal diaphragms for box girders may be bolted or welded to stiffeners during shop fabrication.

Detail diaphragms with bolted connections to stiffeners without separate connection plates.

C6.7.4.1

The following shall supplement *AC6.7.4.1*.

"K-frames" are best for internal diaphragms in box girders, as they allow better access for inspection. "X-frame" diaphragms, in general, are easier to fabricate and to connect during erection as opposed to "K-frames".

Problems can develop in stage construction as a result of differences in elevation between the Stage 1 deflected position and the undeflected position of the Stage 2 members before pouring the Stage 2 concrete. Deck alignment between Stage 1 and Stage 2 and crossframe connections between Stage 1 and Stage 2 girders require

special considerations. Successfully implemented strategies to address this potential problem include the use of:

- At least three girders in either or both stages to reduce transverse movement during deck pour,
- A closure or construction pour between the two stages, or
- Only a top and bottom strut connecting girders between the two stages. Add cross bracing after the deck pour if deemed necessary.

Indicate web details clearly on the plans for either vertical no-load, steel dead-load, or full dead-load condition.

Where there are differential deflections between girders at the ends of crossframe connections, the girders will rotate transversely as (1) the dead load of the steel is applied, and (2) the concrete dead load is applied. This condition most commonly occurs in curved bridges and skewed bridges. This condition will affect the proper fit of subsections, field splices, and crossframe connections, and should be addressed by the designer.

Refer to *Standard Specifications* for shop assembly methods and other fabrication and erection requirements. Using shop assembly methods other than the ones specified in the *Standard Specifications* require special provisions. The primary reason for shop assembly is to ensure correct alignment for girder field splices.

For curved I-girders, crossframes are to be fabricated to fit the no-load condition. During field erection, girder segments will need to be adjusted or supported to make fit-up possible. This is not unreasonable, since curved girders are not self-supporting before crossframes are in place; however, the method results in out-of-plumb girders. For most cases, making theoretical compensation to arrive at plumb in final condition is not justified.

Highly skewed girders present difficult fit-up conditions. Setting screeds is also complicated because of differential deflections between neighboring girders. Design of crossframes and pier diaphragms must take into account twist and rotation of webs during construction. Often, slotted holes for crossframe connections can be used to allow settlement without undue web distortion. This situation should be carefully studied by grid or finite element analysis to determine amount and type of movement

anticipated during construction. Details should be consistent. Unlike curved girders rotating away from plumb at midspan, girder webs for skewed construction should be kept plumb at piers.

Refer to AASHTO and National Steel Bridge Alliance (NSBA) Collaboration standards and documents for more information on steel girder design and detailing, fabrication and erection. These documents are posted on AISC/NSBA website and available for download.

6.7.5—Lateral Bracing

6.7.5.1—General

The following shall supplement *A6.7.5.1*.

Where lateral gusset plates are fillet welded to girder webs, the fatigue stress range in the girder is limited to Category E without transition radius or Category D with carefully made transition radius.

C6.7.5.1

The following shall supplement *AC6.7.5.1*.

In regions of high tension stress range, consider bolting gusset plates to the girder web.

6.7.5.3—Tub Section Members

The following supplements *A6.7.5.3*.

Box girders shall have an internal lateral bracing system inside the section, located as close as possible to the top flange without interfering with stay-in-place metal forms. Single diagonal members shall be used rather than "X-frame" diagonals, unless otherwise required by design.

C6.7.5.3

The following shall supplement *AC6.7.5.3*.

Single diagonal members that are spaced in opposite directions along the length of the box girder interior have proven to be satisfactory. "X-diagonal" frames are expensive and unnecessary unless extremely tight horizontal curvature is a factor.

6.7.7—Heat-Curved Rolled Beams and Welded Plate Girders

6.7.7.2—Minimum Radius of Curvature

The following shall supplement *A6.7.7.2*.

Curved welded plate girders shall be used for bridges having a horizontal radius of 1,200 feet or less. If rolled beams are desired, approval by the Bridge Design Engineer Administrator is required.

C6.7.7.2

The following shall supplement *AC6.7.7.2*.

Fabricators do not routinely heat-curve standard shapes. Consider 1,200 feet as a minimum horizontal radius for rolled beams.

6.7.7.3—Camber

The following shall supplement *A6.7.7.3*

Permanent girder deflections shall be shown in the contract plans in the form of camber diagrams and tables.

C6.7.7.3

The following shall supplement *AC6.7.7.3*

Camber curves shall be shown in the contract plans. Dimensions shall be given at tenth points (twentieth points for spans greater than 200 feet) and crossframe locations.

In order to place bearing stiffeners in the vertical position after bridge deck placement, it is necessary to show expected girder rotations at piers.

Since fabricated camber and girder erection have inherent variability, bridge deck form height is adjusted after steel has been set if necessary. Although a constant distance from top of web to top of deck is assumed, this distance will vary along the girders.

6.10—I-SECTION FLEXURAL MEMBERS

6.10.1—General

6.10.1.1—Composite Sections

Composite section shall be used for all steel girder designs unless noted in *D6.10.1.2*. The top flange in composite section shall be placed directly under the haunch as shown in figure below.

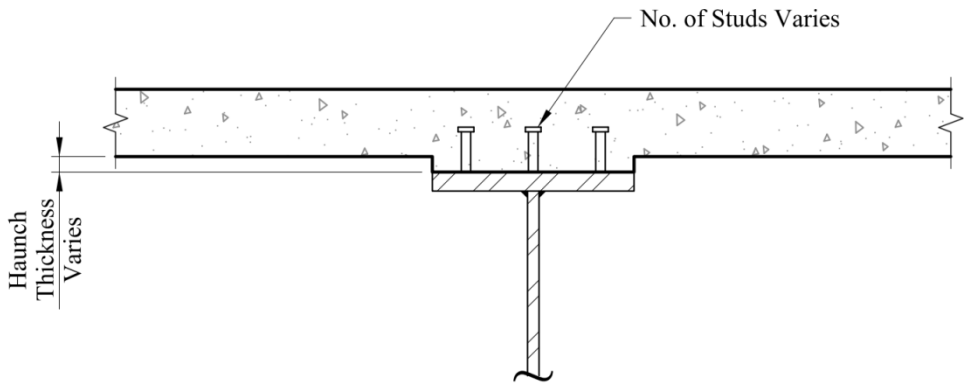

INTERIOR GIRDER

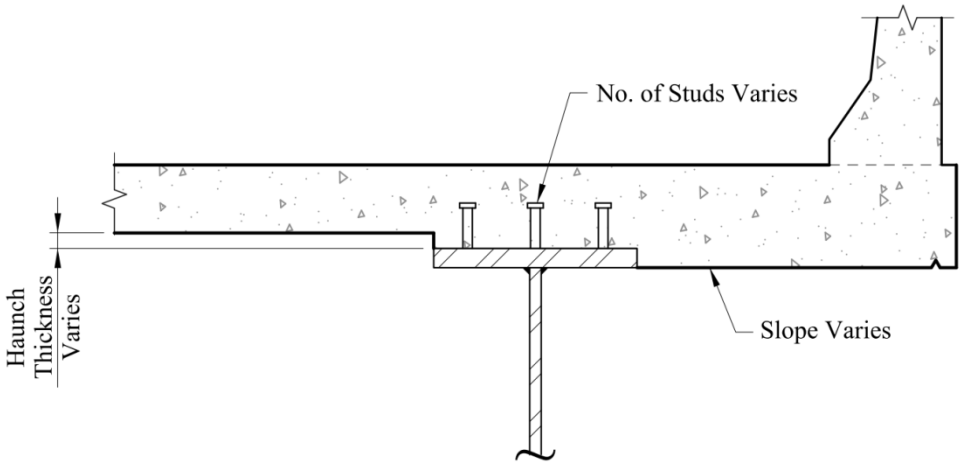

EXTERIOR GIRDER

Composite Section Haunch Detail

6.10.1.1.1—Stresses

6.10.1.1.1a—Sequence of Loading

The following shall supplement *A6.10.1.1.1a.*

Design and detailing of shored construction shall not be used by the designer unless prior approval by the Bridge Design Engineer Administrator is granted.

C6.10.1.1.1a

The following shall supplement *AC6.10.1.1.1a.*

The LRFD Code states in part "*...While shored construction is permitted according to these provisions, its use is not recommended...*" and discusses reasons as to why. The term "shored construction", as used here, applies to shoring of steel girders during construction, such that the CIP concrete deck slab/girder is considered as a composite section resisting the weight of the steel girders and CIP deck when the shoring is removed after curing of the deck.

LADOTD concurs that this practice is not recommended and would allow shored permanent construction only in unique circumstances. Other states have utilized shoring of this type with prestressed concrete girders with success; however, the importance of the shoring being placed and maintained at critical loading and elevation levels is such that construction can be complicated with no easy method for correction if problems occur.

The temporary shoring of steel plate girders and box girders during construction until splice plates are connected is not applicable to this sub-article and is an accepted practice.

6.10.1.2—Noncomposite Sections

The following shall supplement A6.10.1.2.

Noncomposite section is not permitted in positive moment region, but it is allowed in negative moment region with the approval of the Bridge Design Engineer Administrator.

When noncomposite section is used, the top flange of girders shall be encased in concrete haunch as shown in the figure below.

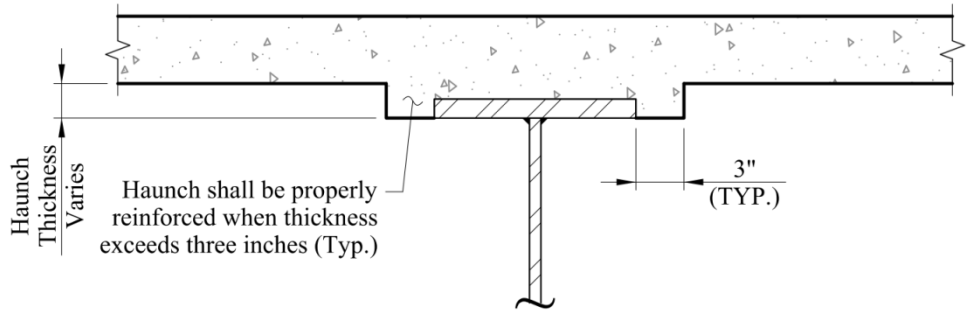

INTERIOR GIRDER

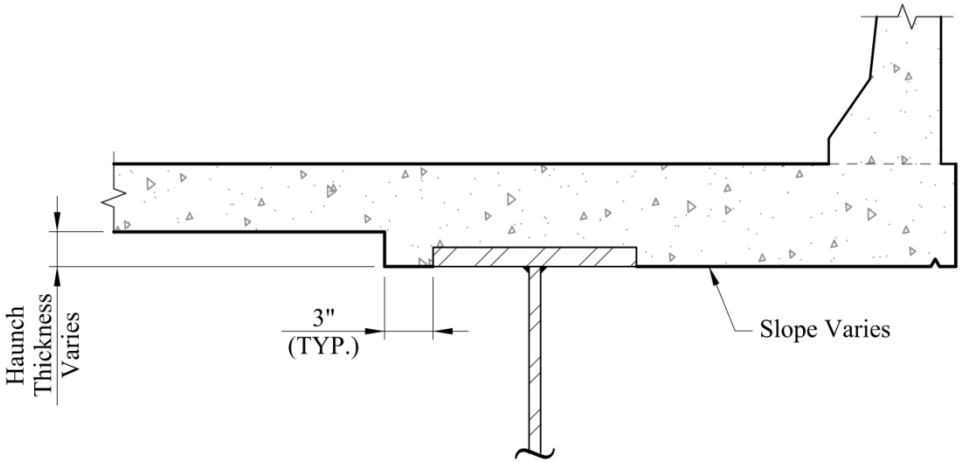

EXTERIOR GIRDER

Noncomposite Section Haunch Detail

6.10.1.6 - Flange stresses and member bending moments

C6.10.1.6

The following shall supplement *AC6.10.1.6.*

Lateral bending stresses in discretely braced flanges shall be determined according to *A6.10.1.6* and *A6.10.3.2.2*. The top flange that is fully encased in concrete may be designed to be continuously braced by concrete. In this case, the lateral bending stresses shall be taken equal to zero. In addition to the simplified analysis procedure, the lateral bracing requirements can be reduced since the top flange is laterally restrained by the slab against live load effects.

6.10.10—Shear Connectors

6.10.10.1—General

The following shall supplement *A6.10.10.1*.

Shear connectors shall be either 3/4 inch or 7/8 inch diameter end-welded studs. Stud shear connector welding shall comply with the requirements of *ANSI/AASHTO/AWS D1.5, Bridge Welding Code, Section 7 "Stud Welding"*.

Other types of shear connectors shall not be used for new construction. For rehabilitation work, other types of shear connectors may be allowed with the approval of the Bridge Design Engineer Administrator.

The attachment method of shear connectors to steel girders (field weld or shop weld) should be contractors' choice; however, designers shall ensure that attachment methods for all shear connectors are shown on steel girder shop drawings.

C6.10.10.1

The following shall supplement *AC6.10.10.1*.

6.10.11—Stiffeners

6.10.11.1—Transverse Stiffeners

6.10.11.1.1—General

The following shall supplement *A6.10.11.1.1*.

Stiffeners used as connection plates shall be fillet welded to the compression flange on each side. Bolting is preferred for connecting to tension flanges or flanges subject to stress reversal, but welding is permitted provided fatigue is considered in the design.

Stiffeners not used as connection plates on straight girders shall be fillet welded to the compression flange on each side and shall be cut back from the tension flange and flanges subject to stress reversal.

C6.10.11.1.1

The following shall supplement *AC6.10.11.1.1*.

Transverse stiffeners used only as web shear stiffeners and located between stiffeners used as connection plates for cross frames or diaphragms are sometimes referred to as "intermediate stiffeners."

Welding of stiffeners to flanges is less expensive than bolting; however, any welding to a tension flange or flange subject to stress reversal results in reduction of allowable stresses and in fatigue considerations that must be accounted for in design. Potential future problems, due to inferior workmanship and inspection, even though slight in nature, warrant the slight increase in initial cost of using bolted connections at tension flanges.

Regarding design, for girder web depths up to 6 ft., the most economical design is to use intermediate stiffeners to satisfy shear requirements. It is recommended that at least 18

lbs. of web steel be saved for every one lb. of transverse stiffener steel that would be added to the girder. Optimum girder design is more sensitive to web plate thickness and number of stiffeners required rather than to the depth of the web plate. These are good rules of thumb, but may change over time. Designers should check AASHTO and National Steel Bridge Alliance (NSBA) publications for most updated information. These publications are posted on AISC/NSBA website and available for download.

6.10.11.2—Bearing Stiffeners

6.10.11.2.1—General

The following shall supplement *A6.10.11.2.1.*

Bearing stiffeners shall be designed to be vertical under full final dead loads which have been considered in the camber calculations.

6.10.11.3—Longitudinal Stiffeners

6.10.11.3.1—General

The following shall supplement *A6.10.11.3.1.*

Longitudinal stiffeners shall not be used for girders with web depth less than 8 feet unless approved by the Bridge Design Engineer Administrator.

C6.10.11.3.1

The following shall supplement *AC6.10.11.3.1.*

Use of longitudinal stiffeners for the design of girders with web depths less than 8 feet is not usually justified due to the direct labor cost for fit-up and welding of materials. It is usually more economical to design for thicker web plates than to use longitudinal stiffeners.

Longitudinally stiffened girders may become economical when girder web depths exceed 8 ft.; their use may be justified on deep, haunched girders or on widening of an existing structure.

6.11—BOX-SECTION FLEXURAL MEMBERS

6.11.1—General

6.11.1.2—Bearings

C6.11.1.2

The following shall supplement *AC6.11.1.2.*

The twisting of box girders needs to be considered if there is more than one bearing on either end of the box. Because of the rigidity of the boxes, provisions must be made to allow for

field adjustments in the bearing height to account for any twisting that may occur.

6.11.11—Stiffeners

6.11.11.1—Web Stiffeners

The following shall supplement *A6.11.11.1*.

For box girders, bearing stiffeners shall be designed to be placed perpendicular to the bottom flange, regardless of vertical grade under final conditions.

C6.11.11.1

The following shall supplement *AC6.11.11.1*.

The design of stiffeners should always account for any placement such that the stiffener, as a critical compression member, is not completely vertical under final conditions.

6.13—CONNECTIONS AND SPLICES

6.13.1—General

The following shall supplement *A6.13.1*.

Field connections shall be bolted connections.

C6.13.1

The following shall supplement *AC6.13.1*.

Field welding can be performed successfully, but several other caveats exist, such as improperly grounding electrical connections to structural steel and the potential of weld splatter damaging tension flanges and other components. Bolted connection is more cost effective and generally safer to perform and inspect than field welding.

6.13.2—Bolted Connections

6.13.2.1—General

6.13.2.1.1—Slip-Critical Connections

The following shall supplement *A6.13.2.1.1*.

When evaluating the bearing capacity, threads shall be included in the shear plane.

6.13.2.1.2—Bearing-Type Connections

The following shall supplement *A6.13.2.1.2*.

Design all bearing-type connections with threads included in the shear plane unless it is not feasible for a specific connection.

Designing connections with threads excluded from the shear plane shall require approval of the Bridge Design Engineer Administrator.

The use of threads excluded in the bolt design shall be limited to bridge rehabilitation only. Bolts with threads, excluded from the design, must be indicated on the plans; dimension and the tolerance

C6.13.2.1.2

The following shall supplement *AC6.13.2.1.2*.

It is possible for bearing joints with threads included in the shear plane to have about 25 percent less capacity than those with threads excluded from the shear plane; therefore, it is prudent to design for the worst-case condition of bolt selection and placement.

for the threaded and non-threaded portions must be shown. A note shall be included in the plan to state that the contractor must ensure that no threaded portion shall be in the bearing surface of the connection.

6.13.2.3—Bolts, Nuts, and Washers

The following shall supplement *A6.13.2.3*.

All high-strength bolts shall have a standard hardened washer under the element that is turned in tightening.

If A490 bolt is approved for use, installation shall be in accordance with the *Standard Specifications*.

6.13.2.5—Size of Bolts

The following shall supplement *A6.13.2.5*.

Bolts for connecting primary and secondary members shall not be less than 0.75 inch in diameter. 0.875 inch diameter bolt is preferred. When practical, use same size bolts for all connections throughout the structure.

Bolt diameters greater than 1.125 inches shall not be used unless approved by the Bridge Design Engineer Administrator.

Refer to Article *A6.4.3.1* for additional criteria.

6.13.2.8—Slip Resistance

The following shall supplement *A6.13.2.8*.

Class “A” surface condition shall be used for the design of all bolted connections. Class "C" surface condition shall be used for galvanized surfaces. Design slip critical connections using a slip coefficient of no more than 0.33, regardless of the required surface Class specified on the project.

6.13.3—Welded Connections

6.13.3.1—General

The following shall supplement *A6.13.3.1*.

For complete joint penetration welded connections, do not detail a specific prequalified complete-joint penetration weld designation in the contract plans. The plans shall state that shop

C6.13.3.1

The following shall supplement *AC6.13.3.1*.

The steel fabricator should be allowed to select the complete penetration weld joint type, based upon their successful shop fabrication and inspection techniques.

drawings require weld symbols to be shown for review and approval.

In the contract plans, identify areas of flanges and other components that are subject to tension or stress reversal.

For widening or rehabilitation of existing structures, confer with the Bridge Design Engineer Administrator and Materials Office personnel for identification of existing base metals, if not attainable from existing plans or documentation.

Identification of tension and stress reversal areas enables inspection personnel to identify the scope and extent of weld testing, and the shop drawings should clearly designate such welds.

6.13.5—Connection Elements

6.13.5.1—General

The following shall supplement *A6.13.5.1*.

Connection plates shall be placed parallel to the skew for bridges with skew angles less than or equal to 20 degrees, and normal to the web for skews greater than 20 degrees. Transverse intermediate stiffeners that do not also serve as connection plates shall be placed normal to the web.

When transitioning the web plate thickness at a field splice, the web thickness increment shall be equal to at least 1/8 inch, such that 1/16 inch fill plates may be used on each side.

6.13.6—Splices

The following shall supplement *A6.13.6*.

When applicable, the following note shall be added to the contract plans:

"The contractor may propose alternate splice types and locations from those shown in the plans, all at no additional cost to the department and subject to review and approval of the Engineer of Record, prior to inclusion within the shop drawings."

C6.13.6

The following shall supplement *AC6.13.6*.

Field splice locations are generally in low moment areas or where a section change is planned. Member lengths equal to or less than 115 ft. and/or of a member weight less than or equal to 100 kips are approximate maximum limits for individual pieces that can be handled efficiently during fabrication and erection.

Bolted field splices in continuous girders are good locations for changing the flange plate thickness and/or width, as this eliminates a welded butt splice.

When a girder is erected over a road open to traffic, consider locating the field splice outside of the traveled lanes in order to minimize disruption of traffic.

6.13.6.2—Welded Splices

The following shall supplement *A6.13.6.2*.

The cross-sectional area of the smaller plate at a flange transition shall not be less than 0.50 of the area of the larger flange plate.

6.16—REFERENCES

Cross-Frame Diaphragm Bracing of Steel Bridge Girders, W. M. Kim Roddis et al, George Washington University, Washington, DC, Report No. K-TRAN: KU-01-2, 2008.

Guidelines for Analyzing Curved and Skewed Bridges and Designing Them for Construction, Daniel Linzell et. al., The Thomas D. Larson Pennsylvania Transportation Institute, 2010.

Steel Bridge Erection Practices, NCHRP Synthesis 345, 2005.

National Steel Bridge Alliance, American Institute of Steel Construction, http://www.aisc.org/contentNSBA.aspx?id=20074.

CHAPTER 7 – ALUMINUM STRUCTURES

(Follow the Latest AASHTO LRFD Bridge Design Specifications)

CHAPTER 8 – WOOD STRUCTURES

(Follow the Latest AASHTO LRFD Bridge Design Specifications)

CHAPTER 9 – DECKS AND DECK SYSTEMS

TABLE OF CONTENTS

9.4—GENERAL DESIGN REQUIREMENTS....1
9.4.2—Deck Drainage....1
9.5—LIMIT STATES....1
9.5.5—Extreme Event Limit States....1
9.6—ANALYSIS....1
9.6.1—Methods of Analysis....1
9.7—CONCRETE DECK SLABS....1
9.7.1—General....1
9.7.1.1—Minimum Depth and Cover....1
9.7.1.3—Skewed Decks....2
9.7.1.5—Design of Cantilever Slabs....2
9.7.2—Empirical Design....2
9.7.2.1—General....2
9.7.3—Traditional Design....2
9.7.3.1—General....2

9.4—GENERAL DESIGN REQUIREMENTS

9.4.2—Deck Drainage

The following shall supplement *A9.4.2*.

Refer to *D2.3.2.2.4* and *D2.6.6* for additional requirements on cross and longitudinal slopes of deck surface and deck drainage.

9.5—LIMIT STATES

9.5.5—Extreme Event Limit States

The following shall supplement *A9.5.5*.

Approved crash tested concrete bridge railing reinforcement details for the barrier and deck reinforcement may be used for the deck overhang design, if the design fits the crash tested variables.

9.6—ANALYSIS

9.6.1—Methods of Analysis

The following shall replace *A9.6.1*.

Approximate elastic methods of analysis specified in *A4.6.2.1*, refined methods specified in *A4.6.3.2*, or the traditional design method specified in *A9.7.3* may be used for various limit states as permitted in *A9.5*.

The empirical design method for bridge decks in *A9.7.2* is not allowed.

9.7—CONCRETE DECK SLABS

9.7.1—General

9.7.1.1—Minimum Depth and Cover

The following shall replace *A9.7.1.1*.

For all bridge spans except movable bridge spans, the minimum and maximum overall deck thickness shall be 8.0 inch and 9.5 inch, respectively, and shall vary in 0.5 inch increments. The overall deck thickness shall include a 0.5 inch sacrificial thickness, which shall be included in the weight calculations and excluded from the design thickness. The design thickness equals to the overall deck

C9.7.1.1

The following shall replace *AC9.7.1.1*.

The 0.5 inch sacrificial thickness is provided to account for the construction tolerance surface texturing, grinding, and the expected future wearing of the bridge deck surface due to applied live loads. Sacrificial concrete must be accounted for as an added dead load but cannot be utilized in the calculations of composite section properties.

thickness less 0.5 inch sacrificial thickness. The top and bottom concrete covers shall be 2.5 inch (2.0 inch design cover + 0.5 inch sacrificial) and 1.5 inch, respectively.

For movable bridge spans, the minimum overall deck thickness shall be 7.0 inch with top and bottom concrete covers of 2.0 inch (1.5 inch design cover + 0.5 inch sacrificial) and 1.5 inch, respectively.

9.7.1.3—Skewed Decks

The following shall supplement *A9.7.1.3*.

Deck skew angle shall not exceed 60 degree unless approved by the Bridge Design Engineer Administrator.

For decks with primary reinforcement placed perpendicular to the main supporting components, minimum three No. 5 bars at 6 inch spacing shall be placed at top mat and parallel to the skew at the each end of deck.

9.7.1.5—Design of Cantilever Slabs

Deck cantilevers, for all prestressed girder spans, shall be designed using the deck thickness (excluding the haunch).

C9.7.1.5

Typically, the deck cantilever thickness is equal to the deck thickness plus the haunch. However, the haunch thickness varies along the girder due to possible camber remaining in girders, thus the deck cantilever thickness will vary along the span as well. To account for this, it is conservative to ignore the haunch and use the deck thickness for cantilever design.

9.7.2—Empirical Design

9.7.2.1—General

The following shall replace *A9.7.2.1*.

The empirical design method is not allowed.

9.7.3—Traditional Design

9.7.3.1—General

The following shall supplement *A9.7.3.1*.

All bridge decks shall be designed using the traditional deck design methods and shall use concrete with a minimum design strength f'_c of 4 ksi. All reinforcing steel shall be Grade 60 bars.

C9.7.3.1

The following shall replace *AC9.7.3.1*.

Minimum reinforcement bar size shall be No. 4. Reinforcement spacing in both transverse and longitudinal directions in the deck shall not exceed seven inches on centers to minimize cracking width.

LADOTD Deck design tables presented in Part III, Ch 2 may be used to determine the deck reinforcement requirements in the interior regions of the deck, provided that the stated limitations are met.

Deck overhang and the adjacent region to the overhang shall be designed for vehicle collision provisions in accordance with *A13* in addition to wheel load. Refer to *D9.5.5* for deck overhang reinforcement requirement when approved crash tested railings are used.

For bridges composed of simple span precast girders made continuous, additional longitudinal continuity reinforcement shall be provided at the top of deck over continuity diaphragm locations in accordance with *D5.14.1.4*. Refer to *A6.10.1.7* for additional deck reinforcement requirements in negative flexure moment region of continuous steel girder bridges.

A deck placement sequence shall be provided on the bridge plans for all continuous multiple span bridges with a cast in place concrete deck. Refer to *Bridge Design Special Details - Miscellaneous Span Details* and *D6.7.2* for requirements on deck placement sequences for continuous multi-span prestressed girder and steel girder bridges.

CHAPTER 10 – FOUNDATIONS

(Follow the Latest AASHTO LRFD Bridge Design Specifications and LADOTD Geotechnical Section Design Policies)

CHAPTER 11 – ABUTMENTS, PIERS, AND WALLS

(Follow the Latest AASHTO LRFD Bridge Design Specifications and LADOTD Geotechnical Section Design Policies)

CHAPTER 12 – BURIED STRUCTURES AND TUNNEL LINERS

(Follow the Latest AASHTO LRFD Bridge Design Specifications)

CHAPTER 13 – RAILINGS

(Follow the Latest AASHTO LRFD Bridge Design Specifications)

CHAPTER 14 – JOINTS AND BEARINGS

(Follow the Latest AASHTO LRFD Bridge Design Specifications)

Volume 2 – Movable Bridge Design

CHAPTER 1—GENERAL PROVISIONS

TABLE OF CONTENTS

1.1—GENERAL CRITERIA 1
1.2—ABBREVIATIONS, DEFINITIONS, AND COMPONENT CLASSIFICATIONS 2
1.3—DESIGN PHILOSOPHY 3
1.3.3—Factors for Ductility, Redundancy, and Operation 3
1.4—DESIGN OF BRIDGE SYSTEMS 3
1.4.2—Machinery Design 3
1.4.4—Safety Design 3
1.4.4.1—General 3
1.4.4.2—Clearances 4
1.4.4.3—Protection from Waterway Traffic 4
1.4.4.4—Traffic Gates and Barriers 4
1.4.4.6—Warning Lights, Alarms, and Traffic Signals 5
1.4.4.6.1—Traffic Signals and Bells 5
1.4.4.6.2—Audible Navigation Signals, Navigation Lights, Aviation Lights 5
1.4.4.7—Stairways and Walkways 5
1.5—BALANCE AND COUNTERWEIGHTS 5
1.5.1—General 5
1.5.2—Counterweight Details 6
1.5.3—Counterweight Concrete 6
1.5.4—Counterweight Pits and Pit Pumps 6
1.6—MACHINERY AND OPERATOR'S HOUSES 6
1.6.1—Machinery House 8
1.7—SPECIAL REQUIREMENTS FOR CONTRACTOR-SUPPLIED INFORMATION & EQUIPMENT 8
1.7.1—Drawings and Diagrams 8
1.7.1.1—Drawings 8
1.7.1.2—Wiring Diagrams, Operator Instructions, Electrical and Mechanical Data Booklets, and Lubrication Charts 9
1.7.2—Tools, Maintenance, and Training 9
1.8—DEFECTS AND WARRANTIES 9
1.9—ACCESS FOR MAINTENANCE 9
REFERENCES 10

APPENDIX—Mechanical Installation, Operation, and Maintenance Manuals 11
APPENDIX—Electrical Installation, Operation, and Maintenance Manuals 13
APPENDIX—Counterweight Balance Block Example Design 15

1.1—GENERAL CRITERIA

The following shall supplement *A1.1*.

This chapter contains information and criteria related to the design of movable bridges. It sets forth the basic Louisiana Department of Transportation and Development (LADOTD) design criteria that are exceptions and/or additions to those specified in the latest edition of the *AASHTO LRFD Movable Highway Bridge Design Specifications* including all interim revisions.

Construction specifications shall be the latest edition of the *Louisiana Standard Specifications for Roads and Bridges (Standard Specifications)*. The *Standard Specifications* are subject to amendment whenever necessary by supplemental specifications and special provisions to specific contracts. In the absence of specific information in the *Standard Specifications*, follow the latest edition of the *AASHTO LRFD Bridge Construction Specifications.*

Bridges vulnerable to coastal storms shall be designed with the provisions in these Specifications herein, those given in *Part II, Volume 1 of the LADOTD Bridge Design and Evaluation Manual (BDEM)*, and those given in AASHTO *Guide Specifications for Bridges Vulnerable to Coastal Storms.* Refer to *LADOTD BDEM, Part II, Volume 1, D1.1* for the procedures to identify bridges vulnerable to coastal storms.

Refer to *LADOTD Hydraulic Manual* for the minimum freeboard requirements of structural components. For vertical lift bridges with main girders perpendicular to the travel direction, the main girders shall satisfy the minimum freeboard requirement. Finished grade for machinery shall be 1 ft. above high/high water elevation. High/High water elevations shall be obtained from the LADOTD Hydraulic Section. Final elevations used for structural components and machinery shall receive approval from the LADOTD.

The Designer shall advise the LADOTD of the optimal position, i.e. open or closed, of the bridge during major storms. This information shall be included in the Operations and Maintenance (O&M) Manual. Refer to *LADOTD Hurricane Bridge Plan*, *LADOTD Procedure for Closing Movable Bridges*, and *LADOTD Procedure for*

Re-Opening Movable Bridges Following a Natural Disaster for the emergency policy in the event of a storm.

1.2—ABBREVIATIONS, DEFINITIONS, AND COMPONENT CLASSIFICATIONS

The following shall replace the definition of concrete in *A1.2:*

Concrete—Concrete or mortar used in the structure; counterweights, including concrete balance blocks; concrete in pockets of column bases, and similar places.

The following shall supplement *A1.2*.

AASHTO SCOBS—AASHTO Subcommittee on Bridges and Structures.

Bridge Design Electrical Unit—The group of electrical engineers who work in the LADOTD Bridge Design Section and specialize in the design and plan preparation of movable bridge power and control systems.

Bridge Design Mechanical Unit—The group of mechanical engineers who work in the LADOTD Bridge Design Section and specialize in the design and plan preparation of movable bridge machinery.

High/High Water Elevation—Design elevation equal to 1 ft. above 100-year storm surge elevation.

Movable Barrier—A physical barrier, i.e. resistance gate.

Operating System—Mechanical, electrical, and hydraulic components necessary to operate the bridge.

Pontoon Bridge—Bridge type which is supported by pontoons and rotates about a vertical axis.

Removable Span—A bridge span that may be removed in order to allow passage of vessels.

Span Heavy—The condition that occurs when the span is heavier than the counterweight.

Span Light—The condition that occurs when the span is lighter than the counterweight.

Span Neutral—The condition that occurs when the span is the same weight as the counterweight.

Traffic Gate—A warning gate.

1.3—DESIGN PHILOSOPHY

1.3.3—Factors for Ductility, Redundancy, and Operation

The following shall replace the 1st, 2nd, and 3rd bullet items of *A1.3.3*.

- For all movable bridges, the importance factor η_I shall be 1.05.
- For all movable bridges, the redundancy factor, η_r, shall be 1.05.
- For all movable bridges, the ductility factor, η_d, shall be 1.0 where detailing conforms to the requirements of *AASHTO LRFD Bridge Design Specifications*, and *AASHTO LRFD Movable Highway Bridge Design Specifications.*

The following shall replace the last sentence of *A1.3.3*.

In the case of the operating system, η_I, η_r, and η_d shall be taken as 1.0.

1.4—DESIGN OF BRIDGE SYSTEMS

1.4.2—Machinery Design

The following shall supplement *A1.4.2*.

Mechanical systems and components for movable bridges shall utilize basic machinery (open-rack and pinion-gear drives, speed reducers, basic hydraulic systems) to drive and lock the span.

C1.4.2

Mechanical equipment that is of such complication that it cannot be maintained by the LADOTD's maintenance personnel shall not be used unless approved by the Bridge Design Engineer Administrator.

1.4.4—Safety Design

1.4.4.1—General

The following shall replace the 1st sentence of *A1.4.4.1*.

Warning signs, hazard identification beacons, traffic signals, gates and barriers, and other safety devices shall be provided for the protection of pedestrian and vehicular traffic.

The following shall supplement *A1.4.4.1*.

Signal bells and gongs shall not be incorporated into the design of traffic gates and barriers.

1.4.4.2—Clearances

C1.4.4.2

The following shall supplement *A1.4.4.2*.

Clearance gauges shall be provided as required by the U.S. Coast Guard. Details of the gauges shall be incorporated in the design drawings.

Refer to *Coast Guard Regulation 33 CFR 118.160* for clearance gauge requirements.

1.4.4.3—Protection from Waterway Traffic

The following shall supplement *A1.4.4.3*.

Refer to *AASHTO LRFD Bridge Design Specifications, A2.3.2.2.5 and A3.14.15,* and *LADOTD BDEM, Part II, Volume 1, D2.3.2.2.5* for more information.

For navigational channels with barge or ship traffic, the piers shall be protected using dikes, dolphins, guide fenders, or by designing the piers to withstand vessel collision. For navigational channels without barge traffic, pier protection requirements shall be determined by the Bridge Design Engineer Administrator on a case-by-case basis. At a minimum, guide fenders shall be used.

1.4.4.4—Traffic Gates and Barriers

C1.4.4.4

The following shall replace the 5th sentence of the 1st paragraph of *A1.4.4.4*.

Red signal lights shall be mounted on the gates (both over and under the gate arms) and interconnected to operate with the traffic signals and any time the gates are less than fully opened.

The following shall replace the 1st sentence of the last paragraph of *A1.4.4.4.*

Momentary switches without seal-in contacts may be provided to permit the gate closure to stop upon release of the operating switch.

The following shall supplement *A1.4.4.4*.

The Designer shall consult the Bridge Design Engineer Administrator for the current design

This is a difficult design issue on which the AASHTO SCOBS T-8 committee is still working

policy governing the perpendicular design load of the movable barrier.

at this time. After a state survey was conducted, it was found that many states have different policies. It has been recommended by the LADOTD Bridge Design Section to follow the current code until this issue has been resolved.

1.4.4.6—Warning Lights, Alarms, and Traffic Signals

1.4.4.6.1—Traffic Signals and Bells

Delete the 2nd sentence of the 1st paragraph of *A1.4.4.6.1*.

Delete the 2nd paragraph of *A1.4.4.6.1*.

1.4.4.6.2—Audible Navigation Signals, Navigation Lights, Aviation Lights

The following shall replace the 2nd paragraph of *A1.4.4.6.2*.

All navigation and other light units on the movable span and on fenders shall be capable of withstanding shocks and rough treatment, and shall be fully sealed and rain-tight.

1.4.4.7—Stairways and Walkways

The following shall replace the 4th sentence of *A1.4.4.7*.

For vertical lift bridges, all of the lifting equipment shall be installed at the platform on top of the towers and safe access to the platform shall be provided.

C1.4.4.7

It is not necessary to access any intermediate position of the lifting span for service.

1.5—BALANCE AND COUNTERWEIGHTS

1.5.1—General

The following shall supplement *A1.5.1*.

For vertical lift bridges, it is preferred for the span to be “span heavy” in the down position and “span neutral” in the up position. This condition normally occurs for spans that lift less than 80 ft. and have no balance chains. For spans that lift more than 80 ft., balance chains may be required, on a case-by-case basis, to prevent the span from becoming “span light” in the up position.

C1.5.1

The following shall supplement *AC1.5.1*.

Experience has shown that for large vertical lift bridges, more than 2,700 lb. of downward vertical reaction per corner is required to get the span to seat reliably.

For bascule span bridges, it is preferred for the span to be "span heavy" in the down position and "span neutral" in the up position. This requires careful design of the counterweight and the counterweight block compartments; such that the center of gravity of the bascule span may be adjusted to the proper location on the channel side of the pivot point after construction of the span is complete.

For vertical lift bridges, assume a downward reaction per corner of 0.5 percent of the total span weight.

1.5.2—Counterweight Details

C1.5.2

Delete the 2nd sentence of the last paragraph of *A1.5.2*.

The following shall supplement *A1.5.2*.

Counterweight pockets shall be properly drained beyond the roadway and walkway.

Covers over counterweights are not preferred due to maintenance and access issues.

Counterweight block details shall be as shown in Appendix–Counterweight Balance Block Example Design at the end of this Chapter.

1.5.3—Counterweight Concrete

C1.5.3

The following shall replace the 3rd sentence of the 1st paragraph of *A1.5.3*.

The maximum weight of heavy concrete shall be 180 pcf.

Experience has shown that it is difficult to develop a heavy concrete mix with a unit weight greater than 180 pcf that remains homogeneous when poured.

1.5.4—Counterweight Pits and Pit Pumps

The following shall replace *A1.5.4*.

For bascule spans, the counterweight pits shall be located above the design high water level and shall be gravity drained.

1.6—MACHINERY AND OPERATOR'S HOUSES

The following shall supplement *A1.6*.

Before beginning the design and layout of the operator's house, the Consultant shall request,

from Bridge Design Mechanical Unit, a set of preferred operator's house plans.

These plans will provide the latest general design and sheet layout which the LADOTD requires for all movable bridges. These requested plans should contain the type of construction and all of the necessary specifications and details that meet the requirements of the LADOTD, including all of the necessary building, HVAC, and plumbing codes.

The operator's house shall be located to ensure accessibility after a storm event.

Movable bridges opened on an "on-call basis" may not be required to have an operator's house. Under this condition, the bridge shall use a lockable control station. The location and construction of the control station shall be approved by the Bridge Design Engineer Administrator.

All paint colors, interior furniture, fixtures, cabinets ceiling type and other features shall be provided to the Consultant by the LADOTD Bridge Design Section.

Wind load and storm surge shall be included in the design by using the current International Building Code (IBC) and hydraulic data for that region. The design criteria shall be submitted to the Bridge Design Engineer Administrator for approval before the Consultant proceeds with the design work.

1.6.1—Machinery House

The following shall supplement *A1.6.1*.

The operator's house and machinery house shall be combined into a single, two-story building, with the exception of the machinery house, which encloses the tower drive machinery of a vertical lift bridge or the span drive machinery of a rolling lift bascule bridge. The top floor shall serve as the operator's house and shall contain the control desk, a bathroom, an air-conditioning unit, a desk, and a kitchenette. All windows shall be storefront with tempered and laminated glass designed for wind loads and missile impacts in accordance with the IBC. The bottom floor shall serve as the machinery house and shall contain an electrical switchboard, an air compressor for the air horn, a standby generator with an automatic transfer switch (if required), and miscellaneous electrical panels.

If the generator louver dampers are to be motorized, the Architectural Design drawings shall provide a damper motor with at least one single-pole double-throw (SPDT) switch which is activated when the louvers are fully open. This damper motor information is located in *D8.3.9.3*.

The bottom floor shall also have a back porch that contains the A/C condensing unit and the sewage treatment plant (if required). The elevation of the bottom floor shall be located above the high/high water level. In the case where the operator's house is located adjacent to a levee, the bottom floor of the operator's house shall be located above the top of the levee.

C1.6.1

In some cases, where a minimal operator's house is used, it is acceptable to have a free-standing machinery house used to house the standby generator, tools and spare parts.

When using generators, the machinery room must be properly ventilated. It is preferred to use motor-driven dampers which open when the generator is running and close when the generator is off. This allows the generator room to maintain climate control for the switchboard.

High/High water level is a design elevation equal to 1 ft. above the 100-year storm surge elevation.

1.7—SPECIAL REQUIREMENTS FOR CONTRACTOR-SUPPLIED INFORMATION & EQUIPMENT

1.7.1—Drawings and Diagrams

1.7.1.1—Drawings

The following shall supplement *A1.7.1.1*.

The Contractor is required to check physical requirements and the electrical circuit requirements of electrical equipment.

Refer to the most current edition of *Louisiana*

Standard Specifications for Roads and Bridges for information on shop drawings.

1.7.1.2—Wiring Diagrams, Operator Instructions, Electrical and Mechanical Data Booklets, and Lubrication Charts

The following shall supplement *A1.7.1.2*.

The Designer shall provide movable bridge operating instructions in the contract documents.

See Appendices "Bridge Operation Manual" and "Electrical Operation and Maintenance Manual" at the end of this Chapter.

1.7.2—Tools, Maintenance, and Training

The following shall supplement *A1.7.2*.

After successful completion of O&M Manual, the Contractor shall be required to provide on-site training.

C1.7.2

The following shall supplement *AC1.7.2*.

Successful completion is defined by completion of a project upon written approval from LADOTD.

1.8—DEFECTS AND WARRANTIES

The following shall supplement *A1.8*.

Refer to the latest edition of the *Louisiana Standard Specifications for Roads and Bridges* for Contractor guarantee requirements.

1.9—ACCESS FOR MAINTENANCE

The following shall supplement *A1.9*.

Maintenance access shall comply with OSHA regulations and the NEC.

REFERENCES

AASHTO Guide Specifications for Bridges Vulnerable to Coastal Storms, Latest Edition, American Association of State Highway and Transportation Officials, Washington D.C.

AASHTO LRFD Bridge Construction Specifications, Latest Edition, American Association of State Highway and Transportation Officials, Washington D.C.

AASHTO LRFD Bridge Design Specifications, Latest Edition, American Association of State Highway and Transportation Officials, Washington D.C.

AASHTO LRFD Movable Highway Bridge Design Specifications, Latest Edition, American Association of State Highway and Transportation Officials, Washington D.C.

AASHTO Standard Specifications for Movable Highway Bridges, 5th Edition, MHB 5, American Association of State Highway and Transportation Officials, Washington D.C., 1988.

Code of Federal Regulations-Title 33, Latest Edition, US Government Printing Office

LADOTD Hurricane Bridge Plan, LADOTD Bridge Design Section, State of Louisiana Department of Transportation and Development, Baton Rouge, LA

LADOTD Hydraulics Manual, Latest Edition, State of Louisiana Department of Transportation and Development, Baton Rouge, LA

LADOTD Procedure for Closing Movable Bridges, LADOTD Bridge Design Section, State of Louisiana Department of Transportation and Development, Baton Rouge, LA

LADOTD Procedure for Re-Opening Movable Bridges Following a Natural Disaster, LADOTD Bridge Design Section, State of Louisiana Department of Transportation and Development, Baton Rouge, LA

Louisiana Standard Specifications for Roads and Bridges, Latest Edition, State of Louisiana Department of Transportation and Development, Baton Rouge, LA

Applicable Codes and Standards:

IBC—International Building Code

NEC—National Electric Code

OHSA—Occupational Safety and Health Standards

APPENDIX—Bridge Operation and Maintenance Manual

The following shall supplement the 2nd sentence of *A1.7.1.2*.

The format of the movable bridge operation and maintenance manual shall be as described in the latest edition of the *Louisiana Standard Specifications for Roads and Bridges.*

The Operation and Maintenance Manuals (booklets) for a movable bridge mechanical system shall contain the following at a minimum:

Mechanical Operation and Maintenance Manual

- **Title Sheet**
- **Front Matter**
  - Table of Contents
  - List of Figures, Illustrations
  - Safety Precautions
- **Parts Lists**
  - Approved Catalogue Cut Sheets
  - Approved Shop Drawings/As-Built Drawings
  - Machinery Paint System
  - Copies of all Commercially Manufactured Equipment Warranties
- **List of Special Tools**
- **Warning Notes**
- **Warranties**
- **Contract Plans**
  - Including all original mechanical contract plan sheets and change order sheets.
- **As Built Drawings**
  - Containing all As-Built Drawings which have been signed and dated by the Project Engineer

Bridge Operation Manual

- **Title Sheet**
- **Front Matter**
  - Table of Contents
  - List of Figures, Illustrations
  - Safety Precautions
- **Theory of Operation**
  - Illustrations and Diagrams
- **Installation and Maintenance Instructions**

  A. Pre-Setup Adjustments
    1. Span Brakes
    2. Plugging Switches
    3. Limit Switches
    4. Span Air Buffers

5. Span Balance

B. Setup Procedure

1. Balancing Span and Counterweights
2. Span Brake Torque Calibration/Test
3. Seating Force/Span Air Buffer Adjustment
4. Span Brake Settings
5. Span Fully Raised Limit Switch Adjustment
6. Span Nearly Lowered Limit Switch Adjustment
7. Span Nearly Seated Limit Switch Adjustment

- **Span Operation Under Normal Conditions**
- **Span Operation Under all Possible Fault Conditions**
- **Troubleshooting Guide**

APPENDIX—Electrical Operation and Maintenance Manual

Operation and Maintenance Manuals for a movable bridge electrical system.

The general format for a typical swing span is as follows:

- **Front Matter**
  - Table of Contents
  - List of Figures, Illustrations
  - Safety Precautions
- **Theory of Operation**
  - Illustrations and Diagrams
  - Control Circuit Operation
    - Traffic Signal Controls
    - Traffic Gate Circuit
    - Traffic Barrier Circuit
    - Safety Interlock Relay
    - Electric Motors
    - Span Control System
    - Span Adjustments
- **Operational Features**
  - Operating Bridge from Remote Station
  - Disabling the Control Circuit from the Remote Station
  - Operating the Navigational Horn Without Electrical Power
  - Stopping the Bridge in an Emergency
  - Stopping the Bridge Before Fully Open
  - What to Do When the Span Stops Short of Fully Closed
  - Controlling the Lights
  - Low Oil Warning Light (for Hydraulically Operated Bridges)
- **Using the Bypass Switches**
  - Bypass Signal Interlock to Gate Control (A)
  - Bypass Span Locks/Lifts Limit Switches to Gate Control (B)
  - Bypass Barrier Limit Switches to Gate Control (C)
  - Bypass Gate Limit Switches to Barrier Control (D)
  - Bypass Signal Interlock to SI Control (E)
  - Bypass Barrier Limit Switches to Lifts/Locks (F)
  - Bypass Span Fully Closed Limit Switch to Lift/Lock Control (G)
  - Bypass Pump Neutral Limit Switch to Span Pump Control (H)
  - Bypass Lift(s) Limit Switches to Span Pump Control (I)
  - Bypass Span Limit Switches to Span Pump Control (J)
  - Disable Automatic Neutral Control (K)
  - Spare (L)

- **One Year Warranty From Contractor**
- **Parts Lists**
  - 100 Items
    - Index
    - Catalogue Cut Sheets
    - Approved Drawings
  - 200 Items
    - Index
    - Catalogue Cut Sheets
    - Approved Drawings
  - 300 Items
    - Index
    - Catalogue Cut Sheets
    - Approved Drawings
  - Full Set of Electrical As-Built Drawings
- **List of Special Tools**
- **Warning Notes**
- **Megger Readings**
- **Electric Motor Test Results (If Required)**

See *D8.1.1* for more information on Electrical Operation and Maintenance Manuals.

APPENDIX—Counterweight Balance Block Example Design

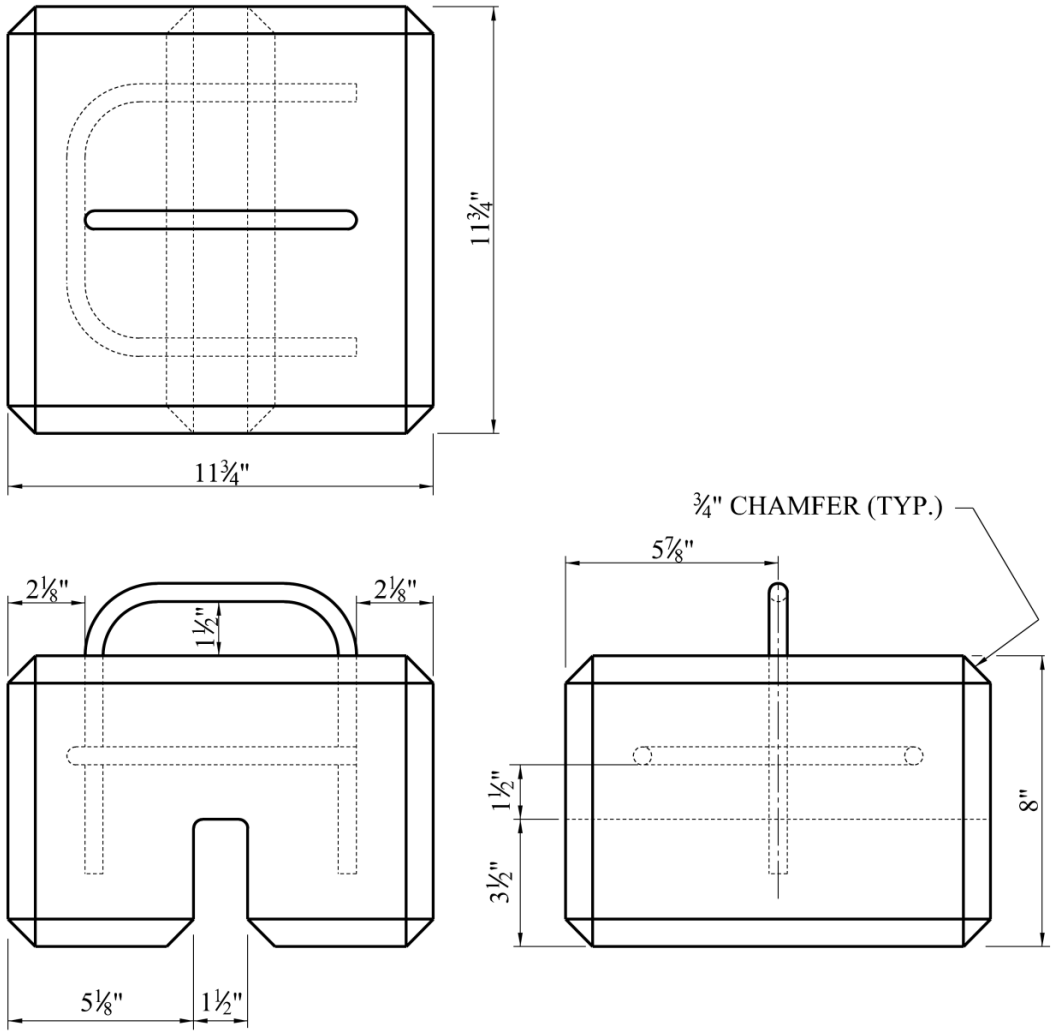

Balance Block Detail

CONCRETE DENSITY RANGE: 140 - 147 LBS. PER CU. FT.
WEIGHT RANGE: 83 - 87 LBS.

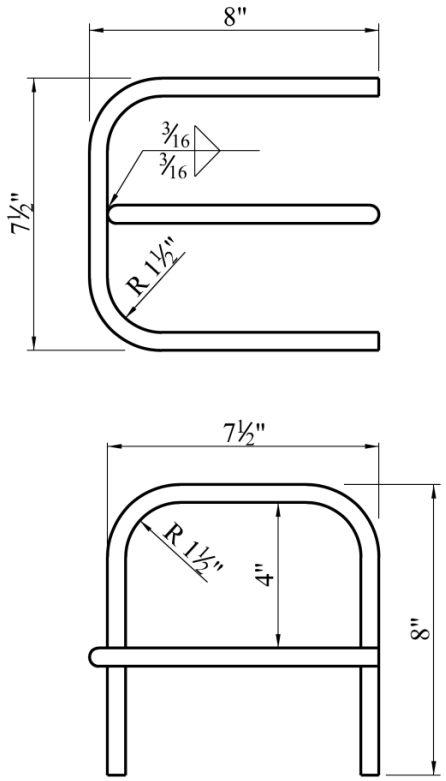

Handle / Reinforcing Steel

#4 DEFORMED REINFORCING STEEL
(STAINLESS STEEL)
ASTM A955, TYPE 316LN

CHAPTER 2—STRUCTURAL DESIGN

TABLE OF CONTENTS

2.1—SCOPE....1
2.1.1—Specifications....1
2.1.2—Bridge Types....1
2.1.2.1—General....1
2.1.2.2—Contract Documents....1
2.1.2.3—Prohibited Structure Types....2
2.3—NOTATION....2
2.4—LOADS, LOAD FACTORS, AND COMBINATIONS....2
2.4.1—General Provisions and Limit States....2
2.4.1.1—Live Load and Dead Load....2
2.4.1.2—Dynamic Load Allowance....2
2.4.1.2.4—End Floor beams....2
2.4.1.3—Wind Loads....2
2.4.1.3.1—General....2
2.4.1.5—Fatigue Limit Truck....3
2.4.1.9—Strength and Rigidity of Structural Machinery Supports....3
2.4.2—Bridge-Type Specific Provisions....3
2.4.2.2—Application of Fixed Bridge Load Combinations....3
2.4.2.3—Movable Bridge-Specific Load Combination-Strength Limit State....3
2.5—MOVABLE BRIDGE DESIGN FEATURES AND REQUIREMENTS....6
2.5.1—Movable Bridge Specific Design Features and Requirements....6
2.5.1.1—Bascule Span Bridges....8
2.5.1.1.4 Floors and Floor Fastenings....8
2.5.1.2—Swing Span Bridges....8
2.5.1.2.2—Rim Bearing....8
2.5.1.2.3—Combined Bearing....8
2.5.1.2.4—Rim Girders....8
2.5.1.2.5—Shear Over Center....9
2.5.1.2.6—Reaction Due to Temperature....9
REFERENCES....10

2.1—SCOPE

2.1.1—Specifications

The following shall replace *A2.1.1*.

The structural design of movable bridges shall conform to the requirements of the latest editions of *AASHTO LRFD Movable Highway Bridge Design Specifications* including all applicable interim changes, *provisions in LADOTD BDEM, Part II, Volume 2*, the latest editions of *AASHTO LRFD Bridge Design Specifications* including all applicable interim changes, and provisions in *LADOTD BDEM, Part II, Volume 1*, except as modified or supplemented herein.

Construction specifications shall be the latest edition of *Louisiana Standard Specifications for Roads and Bridges (Standard Specifications)*. *Standard Specifications* are subject to amendment whenever necessary by supplemental specifications and special provisions to specific contracts. In the absence of specific information in *Standard Specifications*, follow the latest edition of *AASHTO LRFD Bridge Construction Specifications*.

2.1.2—Bridge Types

2.1.2.1—General

The following shall replace *A2.1.2.1*.

Movable bridges shall be of the following types, unless otherwise specified by LADOTD:

- bascule span bridges,
- swing span bridges,
- vertical lift bridges,
- removable span bridges, or
- pontoon bridges.

C2.1.2.1

Pontoon bridges are only allowed with special permission from the Bridge Design Engineer Administrator.

2.1.2.2—Contract Documents

The following shall supplement *A2.1.2.2*.

Refer to *LADOTD BDEM, Part II, Volume 1*.

2.1.2.3—Prohibited Structure Types

The following shall replace *A2.1.2.3*.

Pin-connected trusses and permanent cable-operated bascule, vertical lift, or swing span bridges shall not be used for movable spans.

2.3—NOTATION

The following shall supplement *A2.3*.

WA = water load, stream pressure or wave force (lb.) (*2.4.2.3*).

2.4—LOADS, LOAD FACTORS, AND COMBINATIONS

2.4.1—General Provisions and Limit States

2.4.1.1—Live Load and Dead Load

The following shall supplement *A2.4.1.1*.

In addition to *AASHTO LRFD Bridge Design Specifications*, required live load and dead load criteria shall be as specified in *LADOTD BDEM, Part II, Volume 1*. Future wearing surface shall not be included in the movable bridge design.

2.4.1.2—Dynamic Load Allowance

2.4.1.2.4—End Floor beams

The following shall supplement *A2.4.1.2.4*.

The live load deflection of end floor beams shall be limited to ¼ in.

2.4.1.3—Wind Loads

2.4.1.3.1—General

The following shall supplement *A2.4.1.3.1*.

Refer to *LADOTD BDEM, Part II, Volume 1, D3.8*.

2.4.1.5—Fatigue Limit Truck

The following shall supplement *A2.4.1.5*.

Refer to *LADOTD BDEM, Part II, Volume 1, D3.6.1.4*.

2.4.1.9—Strength and Rigidity of Structural Machinery Supports

The following shall supplement the 2nd paragraph of *A2.4.1.9*.

The loads specified in *A5.7, D5.7, A7.4, and D7.4* for the overload limit state shall include the dynamic load allowance (DAM), as specified in *A2.4.1.2.3*.

2.4.2—Bridge-Type Specific Provisions

2.4.2.2—Application of Fixed Bridge Load Combinations

The following shall replace the 1st sentence of *A2.4.2.2*.

The load combinations, specified in *Table 3.4.1-1* of *AASHTO LRFD Bridge Design Specifications*, as amended by *LADOTD BDEM, Part II, Volume 1*, for all applicable limit states, shall apply to movable bridges, as follows, using the resistance factors specified therein:

2.4.2.3—Movable Bridge-Specific Load Combination-Strength Limit State

The following shall supplement *A2.4.2.3*.

Load combinations for pontoon bridge structures:

- Strength P-I—Load combination related to structure in any open or closed position and dynamic effects of operating machinery.
- Strength P-II—Load combination related to structure in open or closed position and effects of operating machinery, wind, and wave or current forces.
- Strength P-III—Load combination related to structure in any open or closed position and effects of wind and wave or current

C2.4.2.3

The following shall supplement *AC.2.4.2.3*.

With respect to the load combinations required for pontoon bridges, Load Case P-I deals with the structure in the open or closed position, including dynamic effects resulting from the acceleration of the span for stopping or starting. Load Case P-II deals with the structure in the open or closed position with dead load in combination with wind and wave loads or current caused by a 20-year wind storm. The 20-year wind storm conditions should be used to make operational decisions for closing the bridge to traffic to ensure safety of the traveling public. The maximum safe wind load condition for traffic on the pontoon shall be included in the O&M manuals. Load Case P-III

forces.

Considering only one damage condition and location at any one time, pontoon structures shall also be designed for at least the following:

1. Collision: Apply a 10 kip horizontal collision load as a service load to the pontoon exterior walls. Apply a 30 kip collision load as a factored load to the pontoon exterior walls. Apply collision forces to an area no greater than 1 ft. x 1 ft.
2. Flooding of any two adjacent exterior cells along the length of the pontoon.
3. Flooding of all cells across the width of the pontoon.
4. Loss of mooring cable or component.

deals with the structure in the open or closed position with dead load in combination with wind and wave loads or current caused by a 100-year wind storm.

The following table shall replace *Table 2.4.2.3-1*.

Table 2.4.2.3-1—Movable Bridge-Specific Load Combinations

Load Combination	D_O	D_{CW}	L_S	L_C	L_{CW}	W_O	DAD	M_O	WA^*
Bascule and Vertical Lift Bridges									
Strength BV-I	1.55	0	N/A	N/A	0	0	1.55	1.55	N/A
Strength BV-II	1.25	0	N/A	N/A	0	1.25	1.25	1.25	N/A
Strength BV-III	0	1.25	N/A	N/A	1.40	0	0	0	N/A
Swing Bridges									
Strength S-I	1.55	N/A	0	0	N/A	0	1.55	1.55	N/A
Strength S-II	1.35	N/A	1.75	0	N/A	0	0	0	N/A
Strength S-III	1.35	N/A	0	1.75	N/A	0	0	0	N/A
Strength S-IV	1.25	N/A	0	0	N/A	1.25	1.25	1.25	N/A
Strength S-V	1.25	N/A	1.40	0	N/A	1.25	0	0	N/A
Strength S-VI	1.25	N/A	0	1.40	N/A	1.25	0	0	N/A
Pontoon Bridges									
Strength P-I	1.55	N/A	N/A	N/A	N/A	N/A	1.55	1.55	0
Strength P-II	1.25	N/A	N/A	N/A	N/A	1.25	1.25	1.25	1.00
Strength P-III	0.90	N/A	N/A	N/A	N/A	1.25	N/A	N/A	1.00

*****WA = water load, stream pressure or wave force (lb.)

2.5—MOVABLE BRIDGE DESIGN FEATURES AND REQUIREMENTS

2.5.1—Movable Bridge Specific Design Features and Requirements

The following shall supplement *A2.5.1*.

Pontoon Bridges

Main Roadway Flotation:

Main roadway flotation shall require welded steel construction, having marine external coating with magnesium anodes on external surfaces below water line.

Pontoon Swing Arm:

Flexible-moment attachment to rear face of pontoon shall be allowed if variance in water levels is small, i.e. less than 1 ft. per 20 ft. swing arm length. Use rigid-moment attachment to rear face of pontoon with vertical sleeve on pivot pile for all other cases. Swing arm shall be designed to remain above water line at all times. Electrical, hydraulic, and utility lines shall be placed on cable tray along walkway on top of swing arm.

Pontoon Apron:

Apron pivot hinges on roadway structure/bent and locks on pontoon shall be designed for wind and current loads, assuming the swing arm provides no resistance. Apron shall be designed to raise high enough so it does not encroach on horizontal clearance of span. Maximum ramp slope-to-level differential shall be limited to 1:12 without ballast adjustment. Roadway barrier interfaces shall be designed for 1:10 slope differential to allow for live load flotation shifts.

Anchorage/Piles for Swing Arm & Breasting/Sheave Clusters:

Personnel roadway access to swing arm pivot pile and swing arm access walkway shall be provided. If operator control is located on pontoon (operator rides pontoon), access walkway to breasting pile is required. Pivot

pile(s) and sheave pile(s) shall be rigid and have minimal deflection. Breasting pile(s) should be used to allow for impact movement and recovery. Cushioning fenders for pontoon contact points shall be provided.

Operator Controls

Extent of controls, automation, and permissives to be established by Design Engineer based on location and frequency of projected openings.

Movable Barriers, Gates, & Traffic Lights

Movable barriers are not required if aprons extend more than 8 ft. above roadway surface when in full up position and at an angle greater than 45°. Traffic gates are required in front of aprons and traffic lights are required in front of traffic gates. Apron pontoon areas and apron roadway surfaces shall be illuminated.

Mechanical System and Design Basis

Mechanical and electrical equipment shall be housed in a protected environment suitable for equipment being contained, behind a locked gate to prevent tampering, and shall be accessible from the roadway deck.

Wind and Current Loadings on Vertical Freeboard Spaces

Locks, couplings, and piles shall be designed to hold against load case P-III conditions at 90° angles applied to all exposed vertical surfaces between pivot pile and far apron anchorage. Mechanical operating system shall be designed for full swing open, full closed, and hold position against case P-III load conditions in 200 percent of the allowed opening time.

Pontoon bridges shall be designed considering both high water and low water conditions.

2.5.1.1—Bascule Span Bridges

2.5.1.1.4 Floors and Floor Fastenings

The following shall supplement *A2.5.1.1.4*.

Refer to *LADOTD Special Details* for standard steel grid flooring details.

2.5.1.2—Swing Span Bridges

The following shall supplement *A2.5.1.2*.

The end reactions provided for the swing span shall satisfy the following:

- No negative reactions from any live load conditions.

Refer to *A6.8.2.4* and *D6.8.2.4* for end lifts.

2.5.1.2.2—Rim Bearing

The following shall replace *A2.5.1.2.2*.

Rim bearing type swing span bridges are not allowed.

2.5.1.2.3—Combined Bearing

The following shall replace *A2.5.1.2.3*.

Combined bearing type swing span bridges are not allowed.

2.5.1.2.4—Rim Girders

The following shall replace *A2.5.1.2.4*.

Rim bearing type swing span bridges are not allowed.

2.5.1.2.5—Shear Over Center

A2.5.1.2.5 shall be deleted.

C2.5.1.2.5

The shear over center article only applies to rim bearing swing spans. For rim bearing bridges, the center truss panel is designed to be strong enough to resist vibrations and end wind forces when the bridge is open, but weak enough to prevent full continuous girder action across the drum bearings. The middle panel chords are designed to be strong enough to provide for full bending moments due to continuity, but the middle web members are designed so that they only act as braces for the middle posts when the span is open. In this condition, the middle web members cannot carry shears, due to a continuous action. This article is deleted, since rim bearing type swing spans are not allowed.

2.5.1.2.6—Reaction Due to Temperature

The following shall replace the 1st paragraph of *A2.5.1.2.6.*

Provision shall be made for an end reaction due to a temperature differential between the top and bottom chords of 60°F.

REFERENCES

AASHTO LRFD Bridge Construction Specifications, Latest Edition, American Association of State Highway and Transportation Officials, Washington D.C.

AASHTO LRFD Bridge Design Specifications, Latest Edition, American Association of State Highway and Transportation Officials, Washington D.C.

AASHTO LRFD Movable Highway Bridge Design Specification, Latest Edition, American Association of State Highway and Transportation Officials, Washington D.C.

AASHTO Standard Specifications for Movable Highway Bridges, 5th Edition, MHB 5, American Association of State Highway and Transportation Officials, Washington D.C., 1988.

Louisiana Standard Specifications for Roads and Bridges, Latest Edition, State of Louisiana Department of Transportation and Development, Baton Rouge, LA

CHAPTER 3—SEISMIC DESIGN

TABLE OF CONTENTS

3.1—SCOPE.....1
3.3—PERFORMANCE CRITERIA.....1
3.5—SEISMIC ANALYSIS.....1
3.5.1—General.....1
REFERENCES.....2

3.1—SCOPE

The following shall replace the 2nd sentence in *A3.1*.

The provisions of the latest editions of *AASHTO LRFD Bridge Design Specifications* and the provisions in *LADOTD BDEM, Part II, Volume 1* shall apply, except as modified or supplemented herein.

Construction specifications shall be the latest edition of the *Louisiana Standard Specifications for Roads and Bridges (Standard Specifications)*. *Standard Specifications* are subject to amendment whenever necessary by supplemental specifications and special provisions to specific contracts. In the absence of specific information in *Standard Specifications*, follow the latest edition of *AASHTO LRFD Bridge Construction Specifications*.

3.3—PERFORMANCE CRITERIA

The following shall replace the 1st paragraph and bullet items of *A3.3*.

Because of the complex interaction of the various systems of a movable bridge, LADOTD and the Designer shall establish seismic performance goals, consistent with the importance of the bridge, using the guidelines in *AASHTO LRFD Bridge Design Specifications, A3.10.5,* and *LADOTD BDEM, Part II, Volume 1, D3.10.5*.

3.5—SEISMIC ANALYSIS

3.5.1—General

The following shall supplement *A3.5.1*.

Refer to the Louisiana Seismic Zone Map in *LADOTD BDEM, Part II, Volume 1, D3.10* for a list of parishes located in Zone 2.

REFERENCES

AASHTO LRFD Bridge Construction Specifications, Latest Edition, American Association of State Highway and Transportation Officials, Washington D.C.

AASHTO LRFD Bridge Design Specifications, Latest Edition, American Association of State Highway and Transportation Officials, Washington D.C.

AASHTO LRFD Movable Highway Bridge Design Specification, Latest Edition, American Association of State Highway and Transportation Officials, Washington D.C.

AASHTO Standard Specifications for Movable Highway Bridges, 5th Edition, MHB 5, American Association of State Highway and Transportation Officials, Washington D.C., 1988.

Louisiana Standard Specifications for Roads and Bridges, Latest Edition, State of Louisiana Department of Transportation and Development, Baton Rouge, LA

CHAPTER 4—VESSEL COLLISION CONSIDERATIONS

TABLE OF CONTENTS

4.1—SCOPE.....1
4.3—PERFORMANCE CRITERIA.....1
4.4—DESIGN VESSELS, LOADS, AND LIMIT STATES.....1
4.6—COLLISION RISK ANALYSIS.....2
4.7—VESSEL IMPACT LOADS.....2
REFERENCES.....3

4.1—SCOPE

The following shall replace the 2nd sentence in *A4.1*.

The provisions of *AASHTO LRFD Bridge Design Specifications* and the provisions in *LADOTD BDEM, Part II, Volume 1* shall apply, except as modified or supplemented herein.

Construction specifications shall be the latest edition of *Louisiana Standard Specifications for Roads and Bridges (Standard Specifications)*. *Standard Specifications* are subject to amendment whenever necessary by supplemental specifications and special provisions to specific contracts. In the absence of specific information in the *Standard Specifications*, follow the latest edition of *AASHTO LRFD Bridge Construction Specifications*.

4.3—PERFORMANCE CRITERIA

The following shall replace the 1st paragraph of *A4.3*.

For the purpose of selecting maximum annual frequency of collapse, as specified in *AASHTO LRFD Bridge Design Specifications, A3.14.5*, refer to *LADOTD BDEM, Part II, Volume 1, D3.14.5*.

4.4—DESIGN VESSELS, LOADS, AND LIMIT STATES

The following shall replace the 1st paragraph of *A4.4*.

In addition to the Design Vessels required by *AASHTO LRFD Bridge Design Specifications*, as amended or supplemented by *LADOTD BDEM, Part II, Volume 1, D3.14.1*, collision with a smaller vessel, or vessels, designated as Operating Vessels, defined in *A4.2*, may also be considered to:

- Minimize damage from routine marine traffic.
- Ensure that the bridge remains operational.
- Proportion the fender system so that it is not severely damaged after minor collisions.

4.6—COLLISION RISK ANALYSIS

The following shall replace *A4.6*.

The vessel collision risk model described in the current *AASHTO LRFD Bridge Design Specifications*, as amended or supplemented by *LADOTD BDEM, Part II, Volume 1, D3.14.2*, shall apply, except that unique characteristics of movable bridges and the special navigation conditions shall be considered, especially when estimating probability of vessel aberrancy and the geometric probability.

4.7—VESSEL IMPACT LOADS

The following shall replace *A4.7*.

For a given vessel type, size, and speed, vessel collision loads shall be determined as specified in the current *AASHTO LRFD Bridge Design Specifications* as amended or supplemented by *LADOTD BDEM, Part II, Volume 1*.

REFERENCES

AASHTO LRFD Bridge Construction Specifications, Latest Edition, American Association of State Highway and Transportation Officials, Washington D.C.

AASHTO LRFD Bridge Design Specifications, Latest Edition, American Association of State Highway and Transportation Officials, Washington D.C.

AASHTO LRFD Movable Highway Bridge Design Specification, Latest Edition, American Association of State Highway and Transportation Officials, Washington D.C.

AASHTO Standard Specifications for Movable Highway Bridges, 5th Edition, MHB 5, American Association of State Highway and Transportation Officials, Washington D.C., 1988.

Louisiana Standard Specifications for Roads and Bridges, Latest Edition, State of Louisiana Department of Transportation and Development, Baton Rouge, LA

CHAPTER 5—MECHANICAL DESIGN LOADS AND POWER REQUIREMENTS

TABLE OF CONTENTS

5.1—SCOPE. 1
5.2—DEFINITIONS. 1
5.4—SIZING PRIME MOVER FOR SPAN OPERATION. 2
5.4.1—General 2
5.4.2—Bascule Spans. 2
5.4.3—Swing Spans. 3
5.4.4—Vertical Lift Spans 3
5.5—HOLDING REQUIREMENTS. 3
5.5.2—Swing Spans. 4
5.5.3—Vertical Lift Spans 5
5.6—Sizing Brakes 5
5.6.2—Bascule Spans. 5
5.6.3—Swing Spans. 6
5.6.4—Vertical Lift Spans 7
5.7—MACHINERY DESIGN CRITERIA. 7
5.7.1—General 7
5.7.2.1—Auxiliary Drives 8
5.7.3—Braking. 9
REFERENCES. 10
APPENDIX—MOTOR TORQUE CURVES 11

5.1—SCOPE

The following shall supplement *A5.1*.

This chapter contains information and criteria related to the design of movable bridge machinery. It sets forth the basic Louisiana Department of Transportation and Development (LADOTD) design criteria that are exceptions and/or additions to those specified in the latest edition of the *AASHTO LRFD Movable Highway Bridge Design Specifications*, including all interim revisions.

Construction specifications shall be the latest edition of *Louisiana Standard Specifications for Roads and Bridges (Standard Specifications)*. *Standard Specifications* are subject to amendment whenever necessary by supplemental specifications and special provisions to specific contracts. In the absence of specific information in *Standard Specifications*, follow the latest edition of *AASHTO LRFD Bridge Construction Specifications*.

5.2—DEFINITIONS

The following shall supplement *A5.2*.

Hydraulic Bascule Bridge—Bascule bridge utilizing machinery comprised of electric motors, hydraulic pumps, hydraulic cylinders, hydraulic motors, piping, manifolds, solenoid-operated valves, reservoirs, any other hydraulic machinery suitable for use on movable bridges, electrically-released disk brakes or shoe brakes to be used as machinery, and/or motor brakes to operate a movable span.

Hydraulic Swing Span Bridge—Swing span bridge utilizing machinery comprised of electric motors, hydraulic pumps, hydraulic cylinders, hydraulic motors, piping, manifolds, solenoid-operated valves, reservoirs, any other hydraulic machinery suitable for use on movable bridges, electrically-released disk brakes or shoe brakes to be used as machinery, and/or motor brakes to operate a movable span.

Machinery Brake—An electrically-released brake that, acting in conjunction with the motor brake, applies enough static torque to the span drive system to hold the span in the open position against the loads/conditions specified in *A5.5* and *D5.5*. This brake should have a time delay of 5 to 6 seconds, so that it does not set while the motor brake is bringing the span to a controlled stop during normal operation of the span.

Mechanical Bascule Bridge—Bascule bridge utilizing machinery comprised of electric motors, enclosed gear boxes, electrically-released shoe brakes, disk brakes, and open gears to operate a movable span.

Mechanical Swing Span Bridge—Swing span bridge utilizing machinery comprised of electric motors, enclosed gear boxes, electrically-released shoe brakes, disk brakes, and open gears to operate a movable span.

Mechanical Vertical Lift Bridge—Vertical lift bridge utilizing machinery comprised of electric motors, enclosed gear boxes, electrically-released shoe brakes, disk brakes, and open gears to operate a movable span.

Motor Brake—A brake that, acting alone, applies enough dynamic torque to the span drive system to stop the span in 3 to 4 seconds under the normal operating loads/conditions specified in *A5.4.2 – A5.4.4* and *D5.4.2 – D5.4.4*. This brake should have no time delay, and should apply the braking force immediately when called for by the span control system.

5.4—SIZING PRIME MOVER FOR SPAN OPERATION

5.4.1—General

The following shall supplement *A5.4.1*.

Inertia shall be accounted for when sizing the prime mover for acceleration.

The contract documents shall specify that electric motors, nameplates, and data sheets shall be supplied in English units.

Clearly indicate on the plans the following required torques:

T_A - The maximum torque required to accelerate the span to meet the required time of operation.

T_S - The maximum torque required for starting the span.

T_{CV} - The maximum torque required for constant velocity.

Electric motors for span drive hydraulic systems shall be sized to satisfy the provisions of *A7.5.2* and *D7.5.2*.

5.4.2—Bascule Spans

The following shall replace the 1st paragraph in *A5.4.2*.

Maximum Starting Torque (T_S) – Shall be determined for span operation against static frictional resistances, unbalanced conditions specified in *A1.5* and *D1.5*, a wind load of 10 psf on any vertical projection, and shall include inertial resistance due to acceleration.

In Louisiana, ice loading shall be neglected.

C5.4.1

The following shall replace the 5th paragraph in *AC5.4.1*.

Past editions of AASHTO specifications for movable Highway bridges did not include inertia forces in T_S. For LADOTD, the inertia forces shall be included in the applicable provisions.

The following shall replace the 8th and 9th paragraphs in *AC5.4.1*.

Equipment shall be manufactured per NEMA Standard MG 1. No metric electric motors will be allowed on LADOTD projects.

The following shall supplement *A5.4.2*.

Specify a drive capable of developing the torques stated in *A5.4.1* and *D5.4.1*, and opening or closing the leaf within a 90 second time limit.

5.4.3—Swing Spans

The following shall replace the 1st paragraph in *A5.4.3*.

Maximum Starting Torque (T_S) – Shall be determined for span operation against static frictional resistances, a wind load of 10 psf on any vertical projection of the open bridge, and shall include inertial resistance due to acceleration. A 10 second acceleration time shall be used when calculating the acceleration time for the maximum starting torque.

In Louisiana, ice loading shall be neglected.

5.4.4—Vertical Lift Spans

The following shall replace the 1st paragraph in *A5.4.4*.

Maximum Starting Torque (T_S) – Shall be determined for span operation against static frictional resistances, rope bending, unbalanced conditions specified in *A1.5* and *D1.5*, a wind load of 2.5 psf on the area specified in *A2.4.1.3.1* and *D2.4.1.3.1*, and shall include inertial resistance due to acceleration.

In Louisiana, ice loading shall be neglected.

C5.4.4

T_S will be at a maximum when opening the span from the fully closed position, due to the imbalance required for positive seating.

5.5—HOLDING REQUIREMENTS

The following shall replace the 2nd paragraph in *A5.5*.

The machinery shall be designed assuming the span is to be held in the open position against wind loads specified in *A2.4.1.3.1* and *D2.4.1.3.1*, even if separate holding devices are to be used.

C5.5

Any span type that is not normally left in the open position will not normally require any extra device to lock the span in the open position. Special circumstances might dictate otherwise.

Any span type that is normally left in the open position shall have an extra locking device capable of holding the span on its own, but the machinery should still be designed to hold by itself against the “holding load.”

5.5.2—Swing Spans

The following shall supplement *A5.5.2*.

When a swing span is to be normally left in the open-to-marine-traffic position, provisions shall be made to lock the span in this position either at the center pier or at the end lifts by the use of a locking pin or other suitable method. The movable span shall be designed to hold against the wind loads specified in *A2.4.1.3.3* and *D2.4.1.3.3*. Also, the open position shall be investigated for the full wind pressures specified in *AASHTO LRFD Bridge Design Specifications, A3.8,* and *LADOTD BDEM, Part II, Volume 1, A3.8*. Locking the span open shall be part of the normal operation of the bridge.

The Designer may use an alternate means for locking the swing span open by incorporating two additional end piers (one for each end of the span), oriented such that the span, when swung open to marine traffic, can have its end lifts driven to pin the span open against the end piers, similar to what is done when pinning the span in the closed-to-marine traffic condition. This will reduce the wind load requirements to that specified for a "normally closed span," specified in *A5.5.2* and *D5.5.2*. When designing these end piers, live load and live-load impact may be neglected.

C5.5.2

For normally open swing spans pinned at the center pier or other suitable method which do not have provisions to drive the end lifts, the span and balance wheels, including all supporting members tied into the bridge cross bracing, must satisfy the full wind pressures specified in *AASHTO LRFD Bridge Design Specifications, A3.8,* and *LADOTD BDEM, Part II, Volume 1, A3.8*.

When providing the additional rest piers oriented to allow the end lifts to drive and pin the span while in the open position, the design wind loads used shall be that of a normally closed span.

5.5.3—Vertical Lift Spans

The following shall replace the 1st paragraph in *A5.5.3*.

Where a vertical lift span is normally left in the open position, resistance to satisfy wind loads specified in *A2.4.1.3* and *D2.4.1.3* shall be provided by separate holding or locking devices. The machinery shall also be designed without separate holding or locking devices to satisfy the wind loads specified in *A2.4.1.3* and *D2.4.1.3*.

5.6—Sizing Brakes

The following shall supplement *A5.6*.

System inertia shall be incorporated into the brake sizing for deceleration. The brake system shall be designed to hold against loads/conditions specified in *A2.4.1.3* and *D2.4.1.3,* both in the span-open and span-closed positions.

5.6.2—Bascule Spans

The following shall replace the 1st paragraph in *A5.6.2*.

The motor brakes shall have sufficient capacity to stop the span in a maximum of 10 seconds when the span is moving at a speed conforming to the normal time for opening under the influence of the greatest unbalanced loads specified in *A5.4.2* and *D5.4.2* for T_{CV}.

In Louisiana, ice loads shall be neglected.

For the mechanical bascule type bridges, one thruster-operated shoe brake located between the drive motor and the main gear box shall be used on each bascule leaf as a motor brake. This brake shall stop the span in a smooth and controlled manner. The motor brake in this case does not need to comply with the requirements specified in *A2.4.1.3* and *D2.4.1.3*.

The following shall supplement the 2nd paragraph in *A5.6.2*.

For mechanical bascule-type bridges, machinery brakes shall be located as near each output rack as practical and shall engage approximately 4 seconds after the motor brake sets.

5.6.3—Swing Spans

The following shall supplement the 1st paragraph in *A5.6.3*.

For rack and pinion types of swing span bridges a thruster-operated shoe brake shall be used as the motor brake and shall be capable of stopping the span in a smooth controlled manner without exceeding 10 seconds. If two pinions are used then each of the pinions respective motor shall have a motor brake.

Machinery brakes (thruster operated shoe brakes) shall be used in addition to the motor brakes. The machinery brake shall be sized to hold under the requirements specified in *A2.4.1.3* and *D2.4.1.3*.

For swing spans operated by hydraulic cylinders, braking shall be accomplished by slowing down the flow of hydraulic fluid being pumped to and from the cylinders. The "machinery braking" shall be accomplished by activating solenoid-operated stop valves upon arrest of the span.

The following shall supplement the 2nd paragraph in *A5.6.3*.

Hydraulically-operated bridges shall not be left in the unattended "open" position without some form of mechanical lock installation. Blocked-in or closed-valve hydraulic lines shall not be used as a holding brake in this case.

C5.6.3

The recommended method for controlling the flow rate is by using a swash plate hydraulic pump. A gear motor and linkage shall be used to stroke the pump from full flow to creep flow to no flow.

5.6.4—Vertical Lift Spans

The following shall replace the 1st paragraph in *A5.6.4*.

The motor brake(s) shall have the capacity to stop the span in a maximum of 10 seconds when the span is moving at a speed conforming to the normal time for opening or closing–under the influence of the greatest imbalance loads specified in *A5.4.4* and *D5.4.4* for T_{cv}.

In Louisiana, ice loads shall be neglected.

For the mechanical vertical lift type bridge, one thruster-operated shoe brake located between the drive motor and the main gear box shall be used on each tower. This brake shall stop the span in a smooth and controlled manner. The motor brake in this case does not need to hold under the requirements specified in *A2.4.1.3* and *D2.4.1.3*.

The following shall supplement the 2nd paragraph in *A5.6.4*.

For the mechanical vertical lift type bridge, the machinery brake shall engage approximately 4 seconds after the motor brake sets.

C5.6.4

The maximum braking torque occurs when the span is at the nearly seated position while moving downward and span heavy. Under these circumstances, the differential and leveling clutch, located on the main reducer, takes approximately 6 seconds to actuate. The span motor brake(s) shall set after a 1 second delay, allowing the drive motors to plug for 1 second.

In the event that a strong wind load prevents the span from stopping in the desired 4 seconds, the machinery brake(s) shall be applied. This is done by the use of a mechanical time delay integral with the shoe brake, set at a 4 second delay after power is removed from the electric motors.

The goal here is to stop the span before the differential and leveling clutch actuator has completed its operation, allowing the span to stop before the main gearbox is in full differential mode.

When the clutch has finished engaging, the brakes are released, and the span is allowed to float down under its own imbalance and then seats into place.

5.7—MACHINERY DESIGN CRITERIA

5.7.1—General

The following shall replace the 1st paragraph in *A5.7.1*.

Where machinery of the commercial manufactured type is specified, the contract documents shall specify testing requirements to document that such machinery satisfies the project requirements as determined by the Designer.

The following shall supplement *A5.7.1*.

If wound rotor motors are used, all drive machinery shall be designed to handle 200 percent full load motor torque.

All design factors shall be included in plans.

Prime mover sizing criteria may not necessarily establish the maximum load rating of the drive train, because the brake or holding requirements of a particular bridge may be greater than its operational load requirement. Final criteria shall be shown in the design calculations and drawings.

For bascule bridges, compute the acceleration torque for the inertia component and the loading specified for the maximum constant velocity torque. In addition, the drive must be capable of meeting the maximum starting torque requirements and the machinery must be capable of holding the leaf against a 20 psf wind load in the full open leaf position.

The following shall replace *Table 5.7.1-1*.

For A.C.-controlled wound rotor motors, the overload limit state stress can be as high as 300 percent FLT. See Figure A5-1: Wound-rotor Motor Speed Torque Curves in the appendix of this chapter.

Table 5.7.1-1 – Machinery Design Prime Mover Loads

Prime Mover	Service Limit State	Overload Limit State Stress
A.C. (Uncontrolled)	1.5 FLT	Greater of 1.5 ST or 1.5 BDT
A.C. (Controlled)	1.5 FLT	Greater of 1.0 ST or 1.5 AT
A.C. (Wound Rotor Controlled)	2.0 FLT	3.0 FLT
D.C. (Controlled)	1.5 FLT	3.0 FLT
Hydraulic	Refer to Hydraulic Section- Article 7.4	Refer to Hydraulic Section- Article 7.4
I.C. Engines	1.5 FLT	1.0 PT at Full Throttle
Manual Operation	See provisions of Article 5.7.2.1	

5.7.2.1—Auxiliary Drives

The following shall supplement *A5.7.2.1*.

For vertical lift bridges using the drive motor/selsyn arrangement (two drive motors and two selsyns), a separate auxiliary drive is not needed. In the event a motor fails, the bridge can still operate using a single motor in conjunction with two selsyn motors.

For hydraulic swing spans and hydraulic bascule bridges, the hydraulic power unit shall be designed to have redundancy by using dual motors, pumps, valves, etc., that normally act together, but can operate the span in twice the time if operated independently.

C5.7.2.1

The tower drive vertical lift bridge has redundancy built into the drive system, giving it the capability of operating the entire span using one electric motor and two selsyns. The faulty motor can be refurbished while the bridge operates in this mode.

5.7.3—Braking

The following shall supplement *A5.7.3*.

For hydraulic motor brakes, the total mechanical brake system used must be capable of surviving a power failure occurring during maximum operating speed. Elements employed to delay automatic activation of hard-set devices must be reliably demonstrated if the mechanical brake system cannot withstand a full-force impact.

Motor brakes and separate machinery brakes are most applicable for open-gearing installations where multiple shafts are used. As the number of drive shafts is reduced (by integral driver & reducer installations), the ability to incorporate a separate brake directly on the final low-speed drive shaft becomes unfeasible. Designs that incorporate an integral outboard high-speed motor brake shall only be incorporated with an up-sized associated gear reducer capable of the brake-developed torque loadings, regardless of the motor torque curves developed. Brakes installed on a reducer high-speed shaft shall be up-sized to account for dynamic impact of decelerating loads.

C5.7.3

This case arose from the use of a hydraulic motor driving a rack and pinion for the St. Ann swing span, located in Terrebonne Parish.

REFERENCES

AASHTO LRFD Movable Highway Bridge Design Specification, Latest Edition, American Association of State Highway and Transportation Officials, Washington D.C.

AASHTO Standard Specifications for Movable Highway Bridges, 5th Edition, MHB 5, American Association of State Highway and Transportation Officials, Washington D.C., 1988.

AASHTO LRFD Bridge Construction Specifications, Latest Edition, American Association of State Highway and Transportation Officials, Washington D.C.

Borden, L. V. Torque Characteristics of Wound Rotor Motors, Revisited. *Heavy Movable Structures Symposium*. 1996.

Louisiana Standard Specifications for Roads and Bridges, Latest Edition, State of Louisiana Department of Transportation and Development, Baton Rouge, LA

Applicable Codes and Standards:

NEMA—National Electrical Manufacturers Association

APPENDIX—MOTOR TORQUE CURVES

The following figure below shows the typical wound-rotor motor speed torque curves.

Wound-rotor motor speed-torque curves

1: rotor short-circuited;

2-4: increasing values of external resistance.

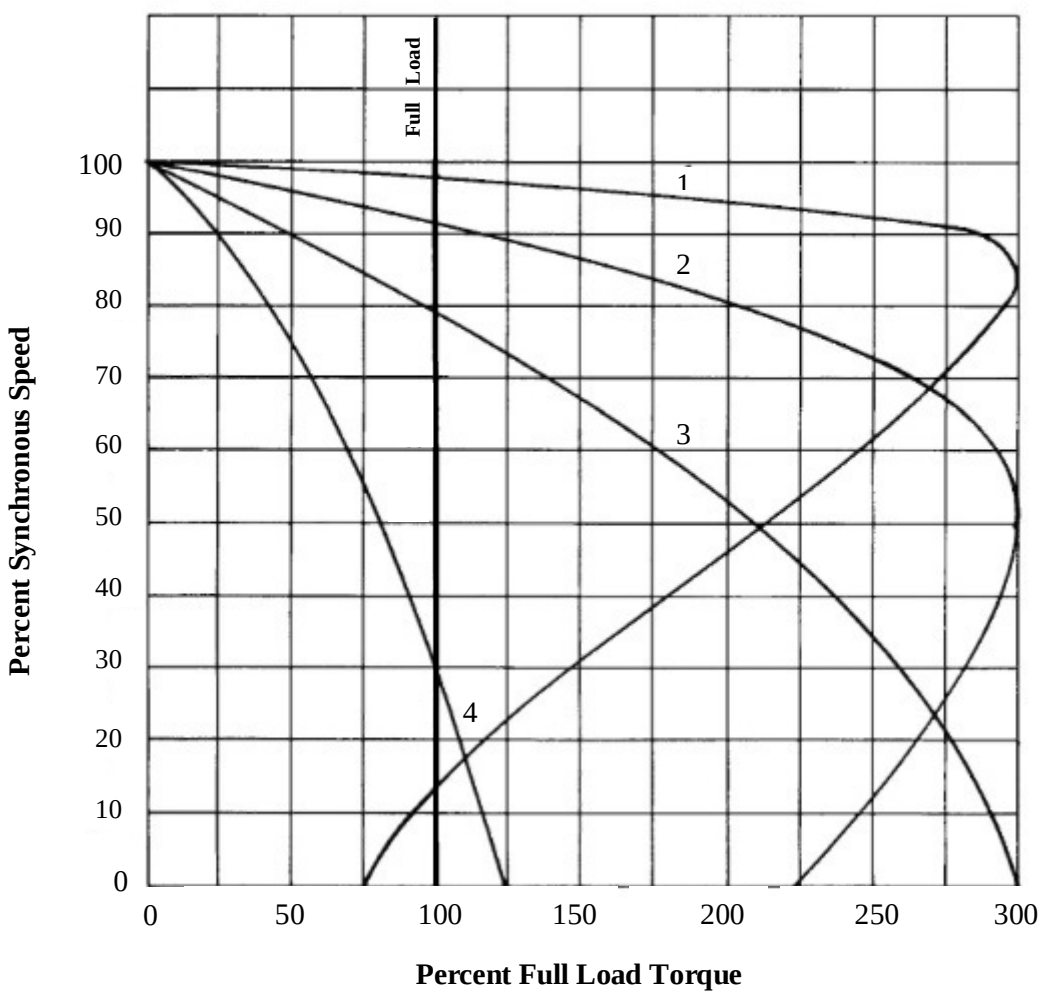

Wound-rotor Motor Speed Torque Curves

CHAPTER 6—MECHANICAL DESIGN

TABLE OF CONTENTS

6.1—SCOPE. 1
6.2—DEFINITIONS. 1
6.3—NOTATION. 1
6.3.1—General. 1
6.4—GENERAL REQUIREMENTS. 2
6.4.1—Machinery. 2
6.4.1.1—Limit States and Resistance Factors. 2
6.4.1.3—Location of Machinery. 2
6.4.2—Aligning and Locking of the Movable Span. 2
6.4.3—Elevators. 2
6.6—RESISTANCE OF MACHINERY PARTS. 3
6.6.1—Resistance at the Service Limit State. 3
6.7—MECHANICAL MACHINERY DESIGN. 4
6.7.5—Design of Open Spur Gearing. 4
6.7.5.1—General. 4
6.7.5.2—AGMA Spur Gear Design Equations. 7
6.7.5.2.2—Design for the Fatigue Limit State. 7
6.7.6—Enclosed Speed Reducers. 8
6.7.6.1—General. 8
6.7.6.3—Worm Gear Reducers. 10
6.7.6.6—Mechanical Actuators. 10
6.7.7—Bearing Design. 10
6.7.7.1—Plain Bearings. 10
6.7.7.1.1—General. 10
6.7.7.1.4—Self-Lubricating, Low Maintenance Plain Bearings. 11
6.7.7.1.4a—Metallic Bearings. 11
6.7.7.1.4b—Non Metallic Bearings. 11
6.7.7.2—Rolling Element Bearings. 11
6.7.7.2.3—Roller Bearings for Heavy Loads. 11
6.7.8—Fits and Finishes. 12
6.7.9—Hubs, Collars, and Couplings. 12

6.7.9.1—Hubs 12
6.7.9.3—Couplings....13
6.7.10—Keys and Keyways 13
6.7.10.1—General 13
6.7.13—Motor and Machinery Brake Design 13
6.7.13.2—Requirements for Electrically Released Motor Brakes....13
6.7.14—Machinery Support Members and Anchorage....15
6.7.14.1—Machinery Supports....15
6.7.14.2—Anchorage....15
6.7.15—Fasteners, Turned Bolts, & Nuts 16
6.8—BRIDGE TYPE-SPECIFIC MECHANICAL DESIGN....17
6.8.1—Bascule Spans....17
6.8.1.1—Drive Machinery 17
6.8.1.2—Racks and Pinions 19
6.8.1.2.1—General....19
6.8.1.2.3—Pinions 19
6.8.1.3—Trunnions and Bearings....21
6.8.1.3.1—Trunnions 21
6.8.1.3.2—Trunnion Bearings....21
6.8.1.4—Buffers....21
6.8.1.5—Span and Tail Locks, Centering Devices....22
6.8.1.5.1—Locking Devices....22
6.8.2—Swing Spans....26
6.8.2.1—Drive Machinery 26
6.8.2.2—Racks and Pinions 27
6.8.2.3—Pivot Bearing 28
6.8.2.4—End Lifts 29
6.8.2.5—Center Wedges....31
6.8.2.6—Balance Wheels....32
6.8.2.7—Rim Bearing Wheels 34
6.8.2.8—Tracks....34
6.8.2.9—Centering Devices....34
6.8.2.10—Span Locks....34
6.8.3—Vertical Lift Spans....34
6.8.3.1—Span Drive Vertical Lifts....34
6.8.3.2—Tower Drive Vertical Lifts 35

6.8.3.2.1—Drive Machinery....35
6.8.3.2.2—Ring Gears and Pinions....37
6.8.3.3—Wire Ropes and Sockets....37
6.8.3.3.1—Diameter of Wire Ropes....38
6.8.3.3.2—Construction....38
6.8.3.3.6—Wire Rope Tensile Strengths....39
6.8.3.3.7—Wire Rope Sockets....40
6.8.3.4—Sheaves....44
6.8.3.4.1—General....44
6.8.3.4.2—Counterweight Sheaves....45
6.8.3.4.3—Sheave Trunnions and Bearings....46
6.8.3.5—Counterweights and Rope Anchorages....48
6.8.3.5.2—Counterweights and Rope Anchorages....48
6.8.3.5.3—Clearance Below Counterweights....48
6.8.3.6—Buffers....49
6.8.3.7—Span Locks and Centering Devices....50
6.8.3.7.1—Locking Devices....50
6.8.3.8—Span and Counterweight Guides....51
6.9—EMERGENCY DRIVES....53
6.9.1—Engines for Driving Generators, Hydraulic Power Units, and Span Drive....53
REFERENCES....54
APPENDIX—Vertical Lift Sheave Dimensions....55
APPENDIX—Rope Selection (EIPS) (4 ropes per sheave)....56
APPENDIX—Rope Selection (EIPS) (6 ropes per sheave)....57
APPENDIX—Rope Selection (EIPS) (8 ropes per sheave)....58
APPENDIX—Rope Selection (EIPS) (10 ropes per sheave)....59
APPENDIX—Rope Selection (EIPS) (12 ropes per sheave)....60
APPENDIX—Rope Selection (EIPS Galvanized) (4 ropes per sheave)....61
APPENDIX—Rope Selection (EIPS Galvanized) (6 ropes per sheave)....62
APPENDIX—Rope Selection (EIPS Galvanized) (8 ropes per sheave)....63
APPENDIX—Rope Selection (EIPS Galvanized) (10 ropes per sheave)....64
APPENDIX—Rope Selection (EIPS Galvanized) (12 ropes per sheave)....65
APPENDIX—Rope Selection (EEIPS) (4 ropes per sheave)....66
APPENDIX—Rope Selection (EEIPS) (6 ropes per sheave)....67
APPENDIX—Rope Selection (EEIPS) (8 ropes per sheave)....68
APPENDIX—Rope Selection (EEIPS) (10 ropes per sheave)....69

APPENDIX—Rope Selection (EEIPS) (12 ropes per sheave).....70
APPENDIX—Rope Selection (EEIPS Galvanized) (4 ropes per sheave) 71
APPENDIX—Rope Selection (EEIPS Galvanized) (6 ropes per sheave) 72
APPENDIX—Rope Selection (EEIPS Galvanized) (8 ropes per sheave) 73
APPENDIX—Rope Selection (EEIPS Galvanized) (10 ropes per sheave) 74
APPENDIX—Rope Selection (EEIPS Galvanized) (12 ropes per sheave) 75

LIST OF FIGURES

Figure 6.7.13.2-1—Thruster Type Electrically Released Shoe Brake 14
Figure 6.8.1.1-1 — Span Drive Machinery Layout for a Rolling Lift Bascule Bridge 18
Figure 6.8.1.2.3-1—Typical Pinion and Ring Gear Assembly on a Bascule Bridge 19
Figure 6.8.1.2.3-2—Pinion, Shaft, & Bearing Assembly for a Rolling Lift Bascule Bridge 20
Figure 6.8.1.5.1-1—Lock Bar and Air Buffer Layout for a Single Leaf Bascule Bridge 24
Figure 6.8.1.5.1-2—Lock Bar Assembly 25
Figure 6.8.2.2-1—Typical Pinion and Rack Gear Assembly for a Mechanical Swing Span Bridge 27
Figure 6.8.2.3-1—Disc Bearing Assembly 28
Figure 6.8.2.4-1—Typical Hydraulic End Lift Assembly 29
Figure 6.8.2.4-2—Typical Mechanical End Lift Assembly 30
Figure 6.8.2.5-1—Typical Center Wedge Assembly 31
Figure 6.8.2.5-2—Typical Center Wedge Assembly 31
Figure 6.8.2.6-1—Typical Balance Wheel Assembly 32
Figure 6.8.2.6-2—Flush Balance Wheel Track Example 33
Figure 6.8.2.6-3—Standard Balance Wheel Track Example 33
Figure 6.8.3.2.1—Tower Drive Machinery for a Vertical Lift Bridge 36
Figure 6.8.3.2.2-1—Pinion and Ring Gear Assembly - Tower Drive Vertical Lift Bridge 37
Figure 6.8.3.3.7-1—Counterweight Rope Assembly 42
Figure 6.8.3.3.7-2—Wire Rope and Socket Assembly 43
Figure 6.8.3.4.2-1—Single Web Counterweight Sheave 45
Figure 6.8.3.4.3-1—Trunnion Spherical Roller Bearing Assembly 47
Figure 6.8.3.6-1—Typical Air Buffer Used on a Vertical Lift Span 49
Figure 6.8.3.7.1-1—Example of the Latching Type of Span Lock 50
Figure 6.8.3.8-1—Example of a Vertical Lift Bridge Guide Roller Assembly for the Fixed End 51
Figure 6.8.3.8-2—Example of a Vertical Lift Bridge Guide Roller Assembly For the Free End 52

LIST OF TABLES

Table 6.6.1-1—Supplemental Allowable Static Stresses, psi. 3
Table 6.7.5.1-1—Recommended Backlash Range for Course-Pitch Spur, Helical, & Herringbone Gears.....6
Table C6.7.5.2.2-3—Overload factor, K_o 7
Table 6.8.3.3.6-1a—Physical Properties of Wire Rope with IWRC 39
Table 6.8.3.3.6-1b—Physical Properties of Wire Rope with HFC..... 40

6.1—SCOPE

The following shall supplement *A6.1*.

This chapter contains information and criteria related to the design of movable bridge projects. It sets forth the basic Louisiana Department of Transportation and Development (LADOTD) design criteria exceptions and/or additions to those specified in *AASHTO LRFD Movable Highway Bridge Design Specifications*, Second Edition, 2007, including all interim revisions.

Construction specifications shall be the latest edition of the *Louisiana Standard Specifications for Roads and Bridges (Standard Specifications)*. The *Standard Specifications* are subject to amendment whenever necessary by supplemental specifications and special provisions to specific contracts. In the absence of specific information in the *Standard Specifications*, follow the latest edition of *AASHTO LRFD Bridge Construction Specifications*.

6.2—DEFINITIONS

The following shall supplement *A6.2*.

Fully Open—The position to which a movable span opens during the normal operation of the bridge.

Past Open—Any position beyond the "fully open" position. For vertical lift span bridges, going from "fully open" to "past open" will cause the "fully open" set point for the height rotary cam limit switch to become out of sync with the movable span. This limit switch will be re-set when the span has reached the seated position. The settings of this limit switch tend to drift during normal operation, due to rope slippage/creep.

6.3—NOTATION

6.3.1—General

The following shall supplement *A6.3.1*.

W_{all} = allowable tooth load, in pounds (*D6.7.5.1*)

P_{cp} = circular pitch, in inches (*D6.7.5.1*)

S_L = allowable unit stress, in pounds per square inch, when using the formula for gear design located in *D6.7.5.1*.

N_p = number of teeth in gear (*D6.7.5.1*)

V = velocity of pitch circle, in feet per minute (*D6.7.5.1*)

np = actual number of teeth in the pinion (*D6.7.5.1*)

ng = actual number of teeth in the gear (*D6.7.5.1*)

6.4—GENERAL REQUIREMENTS

6.4.1—Machinery

6.4.1.1—Limit States and Resistance Factors

The following shall replace the 3rd paragraph in *A6.4.1.1*.

Seismic loading shall be neglected for bridge machinery located in Louisiana.

6.4.1.3—Location of Machinery

The following shall replace the 2nd sentence in *A6.4.1.3*.

Machinery is not required to be located on the stationary part of the bridge.

Machinery placement in the State of Louisiana is affected by the need to keep the machinery above known hurricane storm surge levels for a particular bridge location.

C6.4.1.3

In Louisiana, it is preferred to have the hydraulic power unit, hydraulic piping, end lifts, center live load supports, and balance wheels located on the span for swing span bridges.

6.4.2—Aligning and Locking of the Movable Span

The following shall replace the 2nd sentence in *A6.4.2*.

For swing span bridges, effective end lifting devices shall be used, and, for bascule bridges, centering devices shall be used in conjunction with span locks.

C6.4.2

Centering devices are not required for swing span bridges if the end wedges utilize tapered shoes that limit the span misalignment to less than ± 3 in. and if the wedge shoes have side rails for wedge containment.

The following shall replace the 2nd paragraph in *A6.4.2*.

For vertical lift bridges, span locks shall be interlocked or designed to be driven independent of the motor brakes.

6.4.3—Elevators

The following shall replace the 1st sentence of *A6.4.3*.

Elevators will not be employed on movable bridges unless so specified by the Bridge Design Engineer Administrator.

Only vertical lift bridges having a difference of 100 ft. or more from the bridge deck to the tower drive machinery platform shall, at the discretion of the Bridge Design Engineer Administrator, have elevators incorporated into the design.

6.6—RESISTANCE OF MACHINERY PARTS

6.6.1—Resistance at the Service Limit State

The following shall supplement *Table 6.6.1-1 – Allowable Static Stresses, psi.*

Table 6.6.1-1—Supplemental Allowable Static Stresses, psi.

Material	AASHTO	ASTM	Tension	Compression	Fixed Bearing	Shear
Structural Steel (Carbon Steel)		ASTM A 709 Gr. 50W S_y=50,000psi S_{ut}=65,000psi	16,600	16,600 – 76 $\left(\frac{L_{eff}}{k}\right)$	22,000	8,300
Structural Steel (High Strength Low Alloy)		ASTM A 588, HSLA S_y=50,000psi S_{ut}=70,000psi	16,600	16,600 – 76 $\left(\frac{L_{eff}}{k}\right)$	22,000	8,300
Forged Alloy Steel		ASTM A668 Cl. K S_y=80,000psi S_{ut}=105,000psi	25,000	25,000 - 115 $\left(\frac{L_{eff}}{k}\right)$	30,000	12,500
Forged Alloy Steel (Bottom Disc)		ASTM A514 Gr. Q 275 BHN Min.	30,000	30,000 - 138$\left(\frac{L_{eff}}{k}\right)$	35,000	15,000
Forged Alloy Steel (For Pinions, Gears, & Shafts)		ASTM A291 Gr. 4 S_y=95,000psi S_{ut}=120,000psi	30,000	30,000 – 138$\left(\frac{L_{eff}}{k}\right)$	35,000	15,000
		ASTM A291 Gr. 6 S_y=120,000psi S_{ut}=145,000psi	40,000	40,000 – 184$\left(\frac{L_{eff}}{k}\right)$	48,000	20,000
Steel Castings		ASTM A148 S_y=85,000psi S_{ut}=105,000psi	21,000	21,000 - 96 $\left(\frac{L_{eff}}{k}\right)$	25,000	10,500
Manganese Bronze		ASTM B22 Alloy UNS C86300 S_y=60,000psi S_{ut}=110,000psi	15,000	15,000 -	-	-
Stainless-Steel Bars & Shapes (For Pins)		ASTM A564, Type 630, Condition H1150 S_y=105,000psi S_{ut}=135,000psi	35,000	35,000 - 123$\left(\frac{L_{eff}}{k}\right)$	42,000	17,500
Alloy Steel for line shafts where sized for torsional deflection not strength.		ASTM A434 4140 & 4142 S_y=96,000psi S_{ut}=110,000psi	32,000	32,000 - 148$\left(\frac{L_{eff}}{k}\right)$	38,000	16,000

6.7—MECHANICAL MACHINERY DESIGN

6.7.5—Design of Open Spur Gearing

6.7.5.1—General

The following shall supplement *A6.7.5.1*.

The use of open gearing shall be limited. When used, design open gearing per AGMA specifications. Design and specify guards for all (fast and slow speed) open gearing. Provide Accuracy Grade A9 or better per *ANSI/AGMA 2015-1-A01*.

All open gears shall be 20° full-depth spur teeth. Stub teeth shall not be used unless there are compelling reasons to do so.

Open gears shall also be designed assuming a minimum of 80 percent of the teeth having 80 percent contact along the face of the teeth and no tooth shall have less than 50 percent contact.

It is important to check the gear designed by current AGMA standards against the following formula, which assumes the load to be taken as applied to only one tooth.

The following formula applies:

1. Spur Gears and Bevel Gears

For full-depth involute teeth:

$$W_{all} = FS_L p_{cp}\left(0.154 - \frac{0.912}{n}\right)\frac{600}{600+V}$$

For stub involute teeth:

$$W_{all} = FS_L p_{cp}\left(0.178 - \frac{1.033}{n}\right)\frac{600}{600+V}$$

2. Helical teeth, full depth:

$$W_{all} = 0.7\, FS_L p_{cp}\left(0.154 - \frac{0.912}{n}\right)\frac{1200}{1200+V}$$

C6.7.5.1

This supplement has been taken from *AASHTO 1988 Standard Specifications for Movable Bridges.*

The AGMA gear quality shown here and in the *AASHTO LRFD Movable Highway Bridge Design Specifications*, Second Edition, 2007 including the 2008, 2010, 2011, and 2014 interim revisions, has adopted, with respect to gear quality, the AGMA 2000-A88 specification (previously AGMA 390.03 number designation). This specification has been replaced by AGMA 2015-1 and 2015-2, with the corresponding supplements 915-1 and 915-2 respectively.

The new AGMA 2015 standard is substantially different from the previous AGMA 2000-A88 standard.

AGMA states that "the user of ANSA/AGMA 2015-1-A01 must be very careful when comparing tolerance values formerly specified using ANSI/AGMA 2000-A88." Several critical areas to be aware of are as follows:

1. Accuracy grade numbers are reversed--A smaller grade number represents a smaller tolerance value and, as such, a higher quality gear. This is directly opposite to the previous AGMA standard, ANSI/AGMA 2000-A88, but does align with the procedures used by all other world gear standards. The tolerance grades for the new standard are designated A2-A11. Also note that the letter "A" is used to designate the new AGMA standard versus "Q" for the old 2000-A88 standard.
2. The "K" chart is no longer inferred for profile and lead evaluation--Using the old AGMA gear inspection standard, a "K" chart was established by constructing two lines diagonally across the tolerance band. A key problem with the "K" chart is that any profile or lead trace within the defined

For calculating the strength of bevel teeth, the middle section of the tooth shall be taken. The number of teeth "n" in the above formulas for bevel gear teeth shall be the formative number which, for the pinion, is determined as follows:

$$n = n_p\sqrt{1}\left(\frac{n_p}{n_g}\right)^2$$

where n_p = actual number of teeth in the pinion

n_g = actual number of teeth in the gear

The allowable stresses in pounds per square inch for cut gear teeth of all types shall be:

Bronze	9,000
Bronze High Strength	20,000
Cast Steel	16,000
Class C Forged Carbon Steel AASHTO M102 (ASTM A668 Cl. C)	20,000
Class D Forged Carbon Steel AASHTO M102 (ASTM A668 Cl. D)	22,500

Forged Alloy Steels shall have allowable stress equal to 60 percent of the yield point in tension, but not more than 1/3 of the ultimate strength in tension.

The allowable stress in pounds per square inch for machine-molded teeth shall be:

Cast Steel	8,000

For racks and pinions and all other mating gears and pinions which are not supported in and shop assembled in a common frame, the allowable unit stresses shall be decreased by 20 percent. All open gearing shall be assumed to have 75 percent contact between mating surfaces.

"K" area would be an acceptable gear. In reality, this gear may or may not be a "good" gear. A second problem with the use of a "K" chart is that a nominal value is inferred such that the ideal profile or lead trace is inferred to be in the mean of the "K" area at all points.

3. Slope and form errors are now included--In addition to total helix and profile errors, slope and form errors are included for both profile and helix inspection.
4. The new AGMA 2015 gear inspection is a pure metric standard--Only a few notes are included regarding the US/Imperial system. The new AGMA standard is formula based--The AGMA tolerances for the various accuracy groups are calculated from formulas. This has been done for two reasons. First, the formulas can be computer based to provide easy and accurate calculations of the gear tolerances. Second, the tolerance calculated will reflect the actual gear parameters. Other gear inspection standards use groupings of tolerances that could allow "fudging" of the gear design to place it within a favorable position of the range
5. The new AGMA standard has an extended range. Modules (mn) from 0.5 to 50.0 mn (diametric pitch 50.8 to 0.5 DP) are now included. The new standard includes ranges of diameter (D) of 5 to 10,000mm, teeth (z) of 5 to 1000 (or 10,000/mn, whichever is less), face width (b) of 0.5 to 1000mm, and helix (β) up to 45°.

Accuracy Grade Groupings

The new AGMA 2015 standard places gears into three accuracy groups. The highest quality gears are placed in the "high accuracy" group and have designations of A2-A5. "Medium accuracy" are designated A6-A9, and "low accuracy" are designated A10-A11. Again, notice that the quality grade in the new AGMA standard is preceded by the letter "A" to distinguish it from the previous standard.

For the low accuracy gear grouping only "cumulative pitch" and "single pitch" are required. For the medium accuracy gear grouping,

cumulative pitch and single pitch, as well as "total profile and lead" are required. For the high accuracy gear grouping, cumulative pitch, single pitch, lead and profile total, slope, and form are required.

The following table is taken from *Machinery's Handbook, Twenty-Eighth Edition* and shall be used for determining the backlash for open gearing used for movable bridge applications.

The backlash for open gearing shall be shown on the contract drawings.

Table 6.7.5.1-1—Recommended Backlash Range for Course-Pitch Spur, Helical, & Herringbone Gears

Center Distance (in.)	Normal Diametral Pitches					
	0.10-.049	0.50-1.99	2.00-3.49	3.50-5.99	6.00-9.99	10.00-19.99
	Backlash, Normal Plane, Inches[a]					
Up to 5		…	…	…	…	.005-.015
Over 5 to 10		…	…	…	.010-.020	.010-.020
Over 10 to 20		…	…	.020-.030	.015-.025	.010-.020
Over 20 to 30		…	.030-.040	.025-.030	.020-.030	…
Over 30 to 40		.040-.060	.035-.045	.030-.040	.025-.035	…
Over 40 to 50		.050-.070	.040-.055	.035-.050	.030-.040	…
Over 50 to 80		.060-.080	.045-.065	.040-.060	…	…
Over 80 to 100		.070-.095	.050-.080	…	…	…
Over 100 to 120 *		.080-.110	…	…	…	
Over 120 to 140 *	.145-.175	.100-.125	…	…		
Over 140 to 160 *	.165-.185	…	…			
Over 160 to 180 *	.175-.205	…				
Over 180 to 200 *	.185-.220					

a. Suggested backlash, on nominal centers, measured after rotating to the point of closest engagement. For helical and herringbone gears, divide above values by the cosine of the helix angle to obtain the transverse backlash.

*****These backlash values have been calculated using ***Equation 5.1*** from ***ANSI/AGMA 2000-A88*** and in addition contain the allowance for thermal expansion assuming temperatures up to 70° Fahrenheit from ambient. These backlash values are not part of ***Table 1-AGMA Recommended Backlash Range for Course Pitch Spur, Helical, and Herringbone Gearing*** shown in the ***Machinery's Handbook,*** **Twenty-Eighth Edition**. These backlash values are suggestions intended to be used for the largest rack gears on swing span bridges, bascule bridges, and large sheaves on vertical lift bridges.

The above backlash tolerances account for gear expansion, due to differential in the operating temperature of the gearing and their supporting structure and fabrication tolerances. The values may be used where the operating temperature is up to 70° Fahrenheit higher than the ambient temperature.

For most gearing applications, the recommended backlash ranges will provide proper running clearance between engaging teeth of mating gears. Deviation below the minimum or above the maximum values shown, which do not affect the operational use of the gearing, should not be cause for rejection.

6.7.5.2—AGMA Spur Gear Design Equations

6.7.5.2.2—Design for the Fatigue Limit State

The following shall replace equation *6.7.5.2.2-3* shown in *A6.7.5.2.2*.

$$K_v = \left[\frac{A + \sqrt{v_t}}{A}\right]^B$$

The following shall replace the definition of $\mathbf{K_o}$: The Overload factor shall be taken from Table C6.7.5.2.2-3, below.

$\mathbf{Q_v}$ = Gear Quality Number taken as an integer between 7 and 12 (dim.).

C6.7.5.2.2

$\mathbf{V_t}$ should be $\boldsymbol{v_t}$; there is a typographical error in the equation *6.7.5.2.2-3* shown in *A6.7.5.2.2*

The following shall supplement *AC6.7.5.2.2*.

Overload Factor $\mathbf{K_o}$ shall be taken from Table C6.7.5.2.2-3, below.

Table C6.7.5.2.2-3—Overload factor, K_o

Overload Factor, K_o			
	Driven Machinery		
Source of power	Uniform	Moderate Shock	Heavy Shock
Uniform	1.00	1.25	1.75
Light shock	1.25	1.50	2.00
Medium shock	1.50	1.75	2.25

The following shall supplement the 4th paragraph under *AC6.7.5.2.2*.

This commentary asks the Designer to refer to AGMA Standards for a definition of the gear quality number and goes further to say that "the accuracy of the gear increases with the increase of the gear quality number." This is true when referring to the older *AGMA 2000-A88*, which is the gear quality number shown here (left). The current *AGMA 2015-1 and 2* has changed the definition of the gear quality number to mean "the lower the number the higher the tolerance and the higher the number the lower the tolerance"; this is opposite from what is stated in *AASHTO LRFD Movable Highway Bridge Design Specifications, Second Edition, 2007* including the 2008 interim revisions. See *D6.7.5.1* and *DC6.7.5.1*.

Size Factor K_s shall be determined by the following formula:

$$K_S = 1.192\left(\frac{F\sqrt{Y}}{P}\right)^{0.0535}$$

where:

F = Face width (in).

Y = The Lewis Form Factor.

P = Diametral Pitch.

6.7.6—Enclosed Speed Reducers

6.7.6.1—General

The following shall supplement *A6.7.6.1*.

Specify and detail gearboxes to meet the requirements of the latest edition of ANSI/AGMA 6013 Standard for Industrial Enclosed Gear Drives.

Specify and detail gearing to conform to ANSI/AGMA 2015-1-A01, Accuracy Grade A9 or better using a Service Factor of 1.0 or higher, and indicating input and output torque requirements.

Allowable contact stress numbers, "S_{ac}," must conform to the current AGMA Standard for through-hardened and for case-hardened gears.

Allowable bending stress numbers, "S_{at}," must conform to the current AGMA Standard for through-hardened and for case-hardened gears.

Include gear ratios, dimensions, construction details, and AGMA ratings on the Drawings.

For bascule bridges, provide a gearbox capable of withstanding an overload torque of 300 percent of full-load motor torque (service factor of 3.0 for strength). This torque must be greater than the maximum holding torque for the leaf under the maximum brake-loading conditions. The output shafts shall have permanent differential capability.

For vertical lift bridges, the main parallel shaft speed reducers shall be designed according to the current AGMA standards and be capable of withstanding an overload torque of 200 percent of full-load motor torque (service factor of 2.0 for strength and 1.25 for durability). In addition, the input shaft of this gearbox shall be sized to handle twice the input motor horsepower. The gearbox shall be capable of differential output, but shall also be capable of having the output shafts locked

C6.7.6.1

Please note that, because the enclosed gear reducers are specified by the Designer but the gear box manufacturer is responsible for its design and fabrication, the most current AGMA standards will apply. As a result, this section will adopt the ANSI/AGMA 2015-1-A01. The accuracy Grade in this case is preceded by the letter "A" which corresponds to the current AGMA 2015 standard. See *D6.7.5.1* and *DC6.7.5.1*.

These allowable contact and bending stress numbers are for AGMA Grade 1 materials.

It is recommended to have the differential as near the output as practical to reduce the number of moving parts within the gearbox. If the differential is placed on the input, then a wet clutch may be used.

Sizing the input shaft of the main gearbox to twice the input motor horsepower is due to having a wound rotor motor fail and therefore using one motor to open the bridge while the second motor acting as a selsyn tie driving the third motor (opposite side of the waterway). As a result, the input shaft of the gearbox may experience twice the load.

together to act as one shaft by a means of a manual clutch mechanism. The clutch mechanism shall be engaged and disengaged by pushing and pulling an external rod. It shall be capable of locking and unlocking the output shafts, regardless of whether or not the gearbox is fully loaded, and/or whether or not the gear box is turning.

Specify gears with spur, helical, or herringbone teeth. Bearings shall be anti-friction type and shall have a B-10 life of 100,000 hours, except where rehabilitation of existing boxes requires sleeve-type bearings.

Specify that the housings shall be welded steel plate or steel castings. The inside of the housings shall be sandblast-cleaned prior to assembly, completely flushed, and be protected from rusting. The housing shall have a permanent stainless-steel or aluminum nameplate stating the name of the gear box manufacturer, horsepower rating, service factors, input rpm, output rpm, gear ratio, and thermal rating.

Specify exact ratios.

Specify units with a means for filling and completely draining the case.

Specify an oil drain with a bronze or stainless-steel drain valve. The valve shall have a stainless-steel plug to prevent loss of lubricant due to accident or vandalism.

Furnish each unit with a corrosion-resistant moisture trap breather of the desiccant type with color indicator to show desiccant moisture state.

Specify inspection covers to permit viewing of all gearing (except the differential gearing, if impractical). Inspection covers shall be attached with stainless-steel hardware with seals appropriate for outdoor use.

Specify a sight oil level gauge to show the oil level. The oil level gauge must be of rugged construction and protected from breakage.

Specify that the input and output shafts shall have double FKM rubber shaft seals or those which are recommended by the bearing manufacturer and approved by the Bridge Design Engineer Administrator. All shaft seal assemblies shall have provisions to grease between the seals.

The gearbox shall be lubricated by a synthetic lubricant recommended by the gear box manufacturer.

Design and detail each gearbox with its associated brakes, motors, plugging switches, tachometer, and clutch operating machinery, if applicable, mounted on a single welded support.

Do not use vertically stacked units and components.

Detail and dimension the supports. However, leave off dimensions that are dependent on manufactured equipment. Have the shop obtain certified drawings from the manufacturer prior to producing shop drawings.

Size and locate all mounting bolts and anchor bolts.

All enclosed reducers exposed to the weather shall have the housing, seals, accessories, and the protective finish appropriate for such an application.

6.7.6.3—Worm Gear Reducers

The following shall replace the 1st sentence in *A6.7.6.3*.

Worm gear reducers shall not be used to transmit power to move the span or any high inertial loads. Worm gear reducers may be used to activate rotary cam limit switches, encoders, resolvers, tachometers, selsyn devices, or to drive end lifts and center wedges.

6.7.6.6—Mechanical Actuators

The following shall supplement *A6.7.6.6*.

Actuators shall be all stainless steel and suitable for harsh environments.

Mechanical actuators should never be used to transmit power to move high inertia loads on movable bridges.

C6.7.6.6

Mechanical actuators are commonly used to drive lock bars or actuate span lock latches, and both are considered to have no inertia loads.

6.7.7—Bearing Design

6.7.7.1—Plain Bearings

6.7.7.1.1—General

The following shall supplement *A6.7.7.1.1*.

Sleeve bearings shall be grease-lubricated bronze bushings and shall have grease grooves cut in a spiral pattern for the full length of the bearing.

C6.7.7.1.1

It is desirable to have the friction produced by sleeve bearings aid in the control of bascule bridge leafs while moving.

Provide cast-steel base and cap for bearings. Cap shall have lifting eyes with loads aligned to the plane of the eye.

6.7.7.1.4—Self-Lubricating, Low Maintenance Plain Bearings

6.7.7.1.4a—Metallic Bearings

The following shall supplement *A6.7.7.1.4a*.

These bearings shall not be used unless specified by the Bridge Design Engineer Administrator.

C6.7.7.1.4a

The LADOTD does not want to rely on self lubrication.

6.7.7.1.4b—Non Metallic Bearings

The following shall supplement *A6.7.7.1.4b*.

These bearings shall not be used unless specified by the Bridge Design Engineer Administrator.

6.7.7.2—Rolling Element Bearings

6.7.7.2.3—Roller Bearings for Heavy Loads

The following shall supplement *A6.7.7.2.3*.

Anti-friction bearing pillow block and flange-mounted roller bearings must be adaptor-mounting, self-aligning, expansion and/or non-expansion types.

1. Specify cast-steel housings capable of withstanding the design radial load in any direction, including uplift. Specify that the same supplier shall furnish the bearing and housing.
2. Specify bases to be cast and furnished with pilot holes for mounting so that, at the time of assembly with the supporting steel work, mounting holes are "drilled/reamed-to-fit" in the field. For pillow blocks used in supporting traffic barrier shafting under the roadway, slotted holes shall be used; however, chocks shall be provided at each pillow block having slotted holes.
3. Specify that triple seals shall be used. The inner seal shall be oriented such that it retains the lubricant inside of the bearing housing. The outer two seals shall be

oriented such that they prevent moisture and debris from entering the bearing housing. A provision to grease between the inner and outer seals shall be provided.

4. Specify high-strength mechanically galvanized steel cap screws on pillow blocks. The cap and cap screws must be capable of resisting the rated bearing load as an uplift force. Where clearance or slotted holes are used, the clearance space must be filled after alignment with a non-shrink grout suitable for steel to ensure satisfactory side load performance.

Fixed trunnions on bascule spans shall use bronze sleeve bearings unless specified by the Bridge Design Engineer Administrator.

See Figure 6.8.3.4.3-1 – Trunnion Spherical Roller Bearing Assembly, below, for more information.

6.7.8—Fits and Finishes

C6.7.8

The following shall replace the 2nd paragraph in *AC6.7.8*.

Fits other than those listed in *Table 6.7.8-1* may be used at the discretion of the Bridge Design Engineer Administrator.

The following shall supplement *C6.7.8*.

It has been the LADOTD's experience that if the 0.4 times hub thickness, as described in *A6.7.9.1* and *D6.7.9.1*, is followed for counterweight sheave hubs, an FN2 fit is adequate for sheave trunnions/hubs.

6.7.9—Hubs, Collars, and Couplings

6.7.9.1—Hubs

The following shall supplement the 2nd sentence of the 1st paragraph in *A6.7.9.1*.

The minimum thickness at any place on the hub of counterweight sheaves shall be not less than 0.4 of the gross section diameter of the bore.

6.7.9.3—Couplings

The following shall supplement *A6.7.9.3*.

Coupling information shall be included in the plans and shall include torque ratings, bore sizes, key sizes, and number of keys for the driver and driven sides. Provide coupling guards on all high-speed couplings. Specify low maintenance couplings: preferably the single gear type where feasible. Double gear couplings are not recommended.

All couplings associated with limit switches or other control-related equipment shall use stainless-steel double-helical flexure beam couplings with stainless-steel set screws and keys or of similar design.

C6.7.9.3

Helical flexure couplings shall only be used on shafts whose purpose is to transmit angular rotation to control devices such as rotary cam limit switches, selsyn devices, transmitters, resolvers, tachometers, or encoders. Use these couplings only for control not power transmission.

6.7.10—Keys and Keyways

6.7.10.1—General

The following shall supplement *A6.7.10.1*.

All keys for shafts 1 in. diameter and smaller shall be ASTM A276 304/316 stainless steel.

C6.7.10.1

The following shall supplement *AC6.7.10.1*.

ASTM A564 Type 630 Condition H1150 can be used if higher strength is needed

6.7.13—Motor and Machinery Brake Design

6.7.13.2—Requirements for Electrically Released Motor Brakes

The following shall supplement *A6.7.13.2*.

Use thruster-type brakes. Specify double-pole; double-throw limit switches to sense brake fully set, brake fully released, and brake manually released.

Provide a machinery brake and a motor brake. Submit calculations justifying the brake torque requirements.

Specify *AISE-NEMA* brake torque rating in the plans. Ensure that both dimensions and torque ratings are per *AISE Technical Report No. 11, September 1997*.

Show brake torque requirements on the contract drawings.

Specify the brake thruster to have an enamel powder coat finish with stainless-steel accessories

suitable for harsh environments.

Specify all brake materials, with the exception of the brake wheel and the thruster, to be made from stainless steel with bronze bushings/spacers.

Carefully consider machinery layout when locating brakes. Avoid layouts that require removal of multiple pieces of equipment for maintenance of individual components.

Ensure that brakes are installed with base in the horizontal position only. For rolling lift bascule bridges where the movable bridge drive machinery is located on the movable span, orient brakes such that the hydraulic thrusters will function properly throughout the opening angle of the span.

All brakes shall use a stainless-steel NEMA 4X enclosure with the appropriate seals and stainless-steel hardware. The enclosure shall permit access to all brake adjustment points.

Where practical, locate the brake between the motor and the gearbox in order to hold the shaft while the motor is removed and/or replaced.

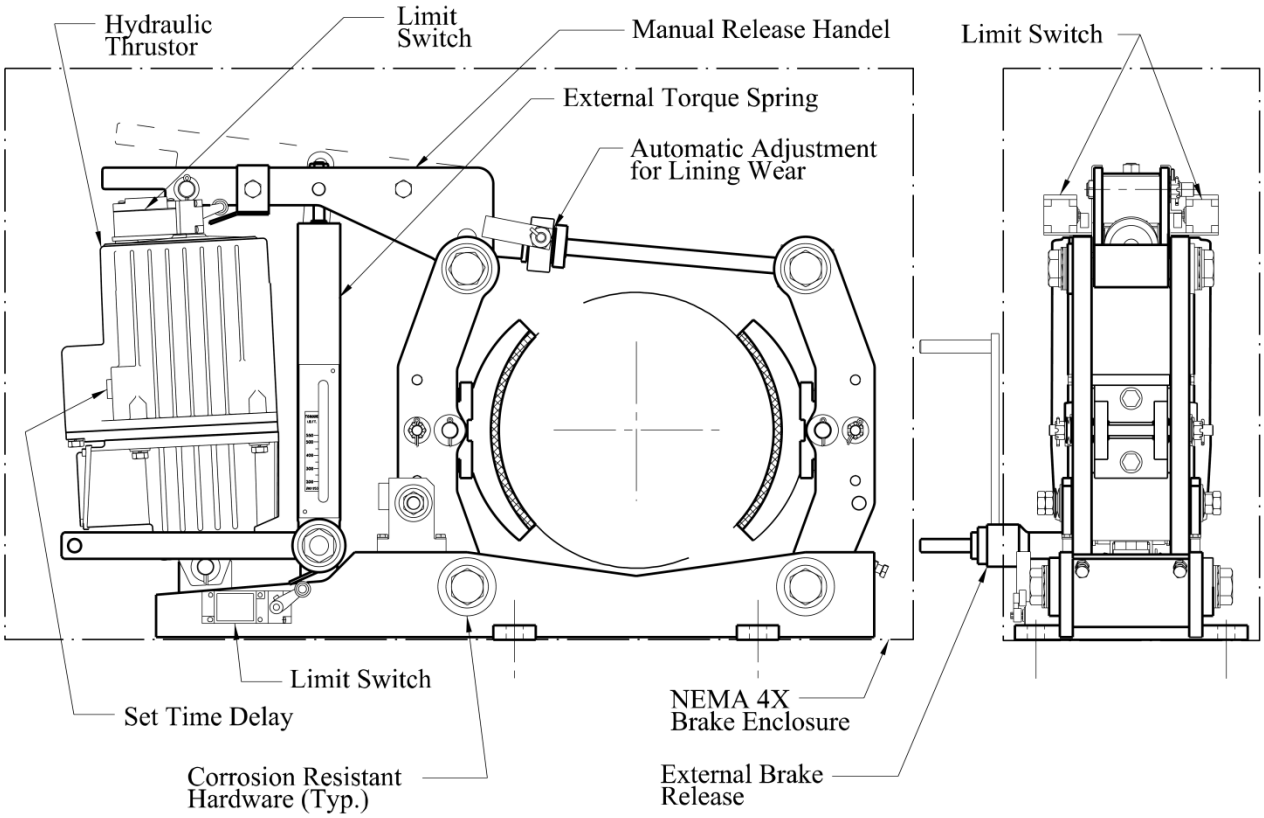

Figure 6.7.13.2-1—Thruster Type Electrically Released Shoe Brake

6.7.14—Machinery Support Members and Anchorage

6.7.14.1—Machinery Supports

The following shall supplement *A6.7.14.1*.

Provide a self-contained, welded steel support for each pair of pinion bearings and trunnion bearings. Avoid shapes and conditions that trap water and/or collect debris.

When turned bolts are to be used, specify the support to be fabricated and shipped to the field blank (with no holes). All turned bolt holes will be field drilled and reamed at assembly with their respective pillow block bearing assemblies.

Indicate or specify flatness and parallelism, position, levelness, and orientation tolerances for the supports.

Machine the mounting surface per *A6.7.8* and *DC6.7.8*.

Design to assure that the anchor bolts will be accessible for hydraulic tensioning.

Provide a reasonable clearance all around the machinery support to facilitate service access to the bearings.

Provide adjustment screws and tabs on top of the machinery support to accurately locate each bearing housing relative to its associated support.

C6.7.14.1

The following shall supplement *AC6.7.14.1*.

Care should be taken not to dimension supports based on a manufactured item. Those dimensions must be based on the submitted component. Machinery supports should not be approved before the machinery is approved.

6.7.14.2—Anchorage

The following shall supplement *A6.7.14.2*.

For machinery supports anchored to concrete, design for the maximum forces generated in starting or stopping the span plus 100 percent impact. Design hydraulic cylinder supports for 150 percent of the relief valve setting or the maximum operating loads plus 100 percent impact, whichever is greater. Detail machinery supports anchored to the concrete by preloaded anchors such that no tension occurs at the interface of the steel and concrete under any load conditions.

Mechanical devices used as anchors must be capable of developing the strength of reinforcement without damage to the concrete. Concrete anchors must be cast-in-place, drilled and epoxy-grouted, or undercut bearing

C6.7.14.2

expansion-type anchors. The bolt must consistently develop the minimum specified strength of the bolting material to provide a favorable plastic elongation stretch over the length of the bolt prior to causing high-energy failure. Require pullout testing of anchors deemed to be critical to the safe operation of the bridge machinery system. Pullout verification tests must be performed at not less than 200 percent of maximum operational force levels.

The depth and diameter of the embedment must be sufficient to assure steel failure prior concrete failure, with concrete cone shear strength greater than the strength of the bolting material.

Anchor Bolt Design:

Design anchor bolts subject to tension at 200 percent of the allowable basic stress and shown, by tests, to be capable of developing the strength of the bolt material without damage to concrete.

Specify the anchor bolts to be hot-dipped galvanized (for standard-grade bolts) or mechanically galvanized (for high-strength bolts).

Machinery anchor bolts shall be 316 stainless steel-rated for a minimum of 30ksi for saltwater environments and type 304-rated for a minimum of 30KSI if salt water is not present.

For high-strength stainless-steel anchor bolts, use ASTM F 593, alloy group 7, Condition AH, 135KSI Tensile and 105KSI Yield; or ASTM A564, Type 632, H1150, 135KSI Tensile and 105 KSI Yield for bolts greater than 1 ½ in. diameter.

The current view of the LADOTD is to move to stainless-steel anchor bolts, both for structural connections and mechanical equipment connections because of the amount anchor bolts that are failing prematurely due to corrosion.

6.7.15—Fasteners, Turned Bolts, & Nuts

The following shall supplement *A6.7.15*.

Fasteners, cap screws, turned bolts, nuts, and washers shall conform to the latest edition of the *Louisiana Standard Specifications for Roads and Bridges*.

6.8—BRIDGE TYPE-SPECIFIC MECHANICAL DESIGN

6.8.1—Bascule Spans

6.8.1.1—Drive Machinery

The following shall replace *A6.8.1.1*.

Drive machinery for bascule spans shall include: drive motor(s), main reducer, output shafts, and two pinions driving two racks mounted to two girders.

Hydraulic drive machinery shall also include a redundant hydraulic power plant powering multiple hydraulic cylinders having stop tubes and cushions. The redundant hydraulic power plant shall consist of electric motors, pumps, directional control valves, reservoir, hydraulic piping, and hydraulic hoses.

C6.8.1.1

There are exceptions, e.g., machinery to drive one pinion/rack centrally located on the span.

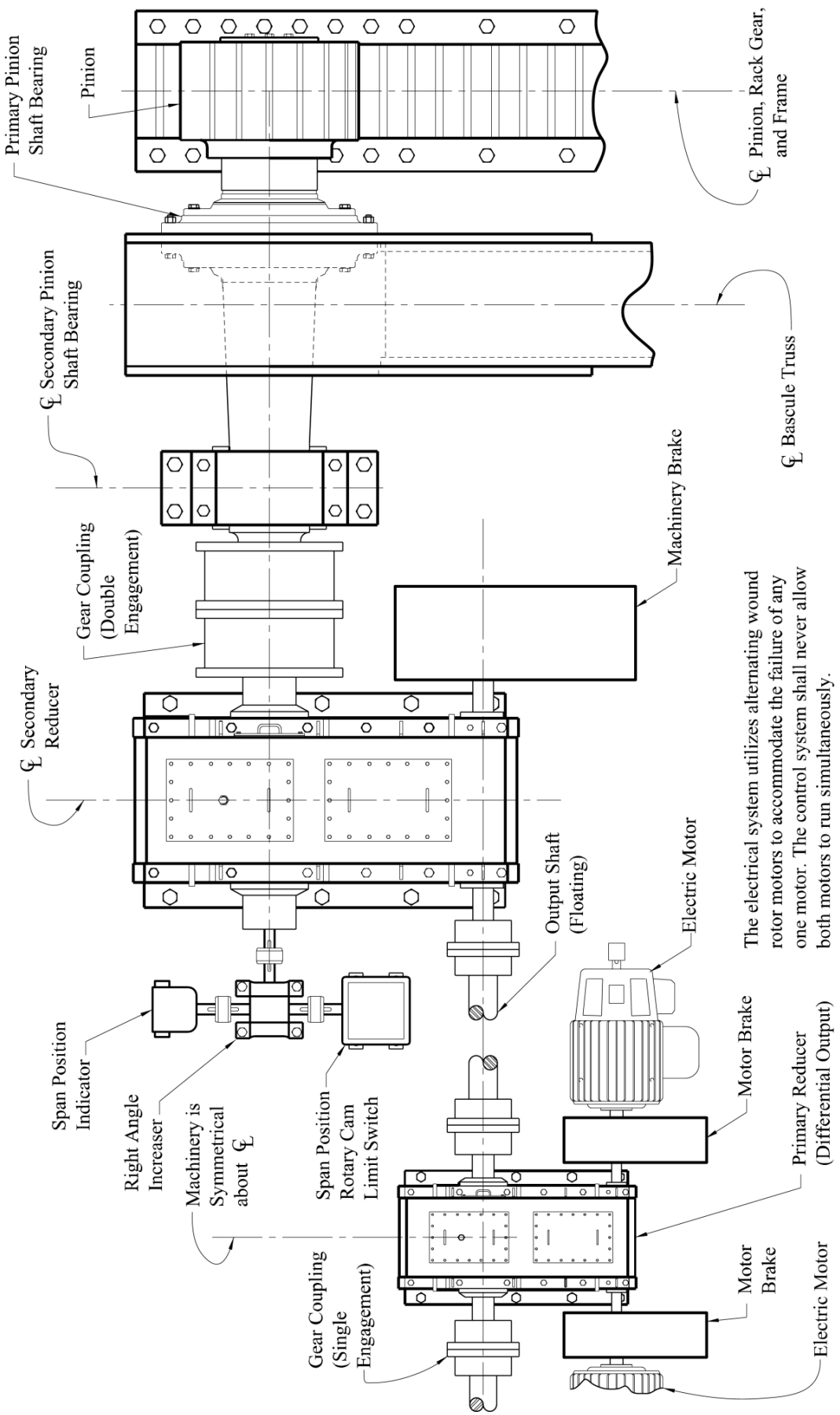

Figure 6.8.1.1-1 — Span Drive Machinery Layout for a Rolling Lift Bascule Bridge

6.8.1.2—Racks and Pinions

6.8.1.2.1—General

The following shall replace *A6.8.1.2.1*.

Where a multiple rack and pinion drive is used, there shall be a differential gear reducer on the bridge to equalize the torques at the main pinions.

C6.8.1.2.1

This main reducer shall be in differential mode at all times. A clutch mechanism used to lock or unlock the output shafts is not required.

6.8.1.2.3—Pinions

The following shall supplement *A6.8.1.2.3*.

The pinion shall be 1 in. greater (½ in. on each side) in face width than the mating rack gear.

C6.8.1.2.3

The pinion face width shall be greater than the rack face width for bascule bridges.

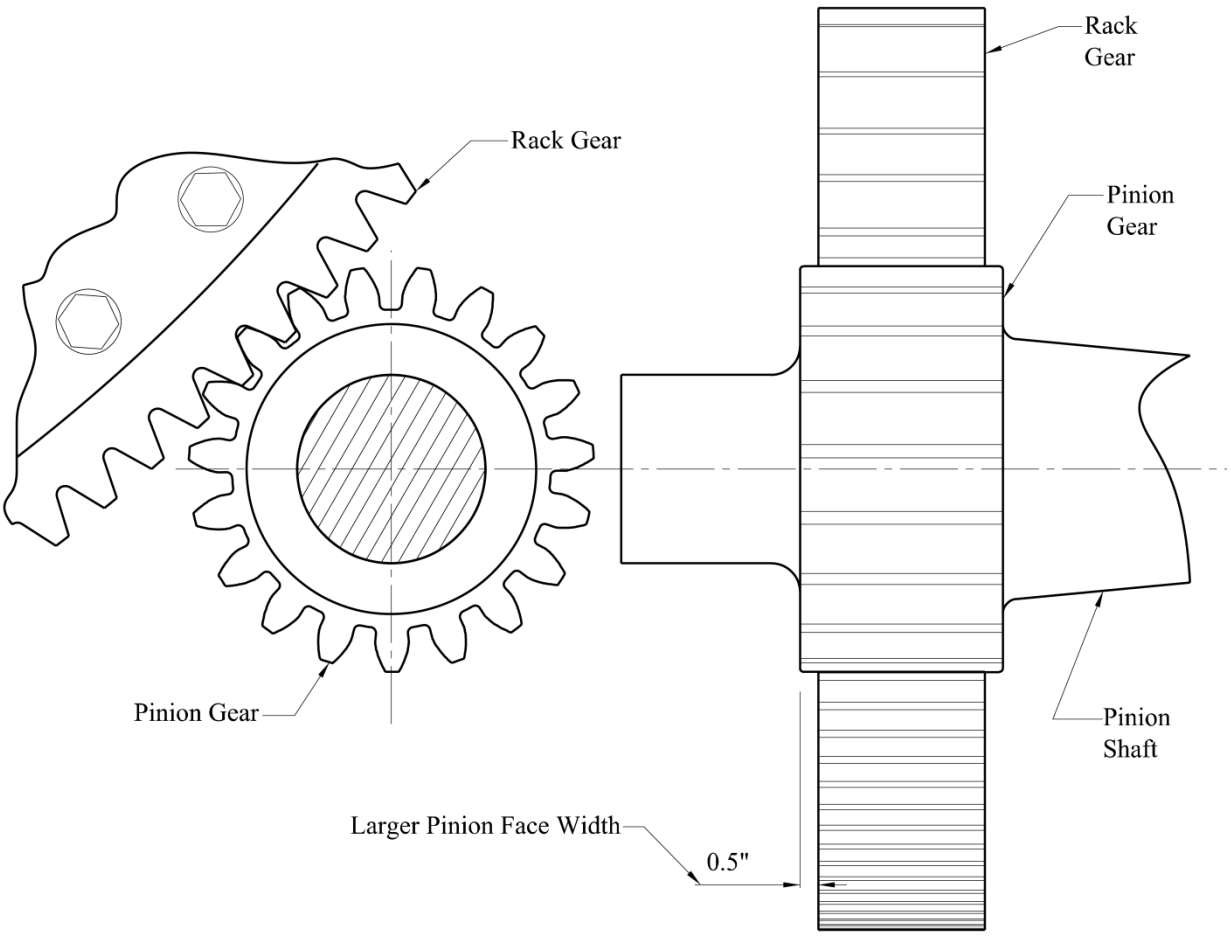

Figure 6.8.1.2.3-1—Typical Pinion and Ring Gear Assembly on a Bascule Bridge

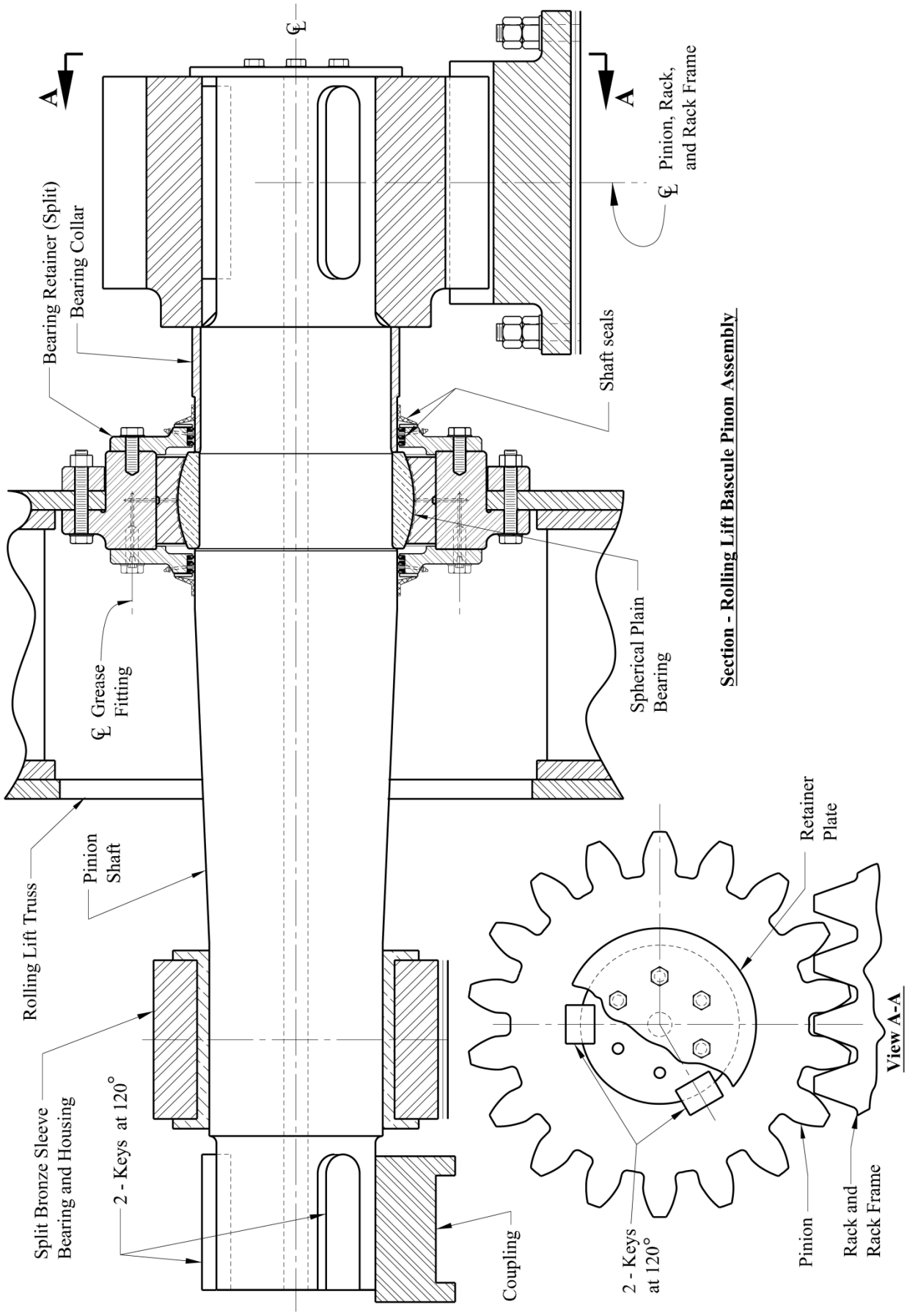

Figure 6.8.1.2.3-2—Pinion, Shaft, & Bearing Assembly for a Rolling Lift Bascule Bridge

6.8.1.3—Trunnions and Bearings

6.8.1.3.1—Trunnions

The following shall supplement *A6.8.1.3.1*.

Provide shoulders with fillets of appropriate radii.

Provide clearances for thermal expansion between shoulders and bearings.

Do not use keys between the trunnion and the hub.

For trunnions over 8 in. diameter, provide a hole 1/5 the trunnion diameter lengthwise through the center of the trunnion. Extend the trunnion at least 5/8 in. beyond the end of the trunnion bearings for bronze bushings only.

Provide a 2 in. long counter bore concentric with the trunnion journals at each of the hollow trunnion ends.

In addition to the shrink fit, drill and fit dowels of appropriate size through the hub into the trunnion after the trunnion is in place. The dowels shall have the means to vent air when they are being installed.

For rehabilitation of existing Hopkins trunnions, verify that trunnion eccentrics have capability for adjustment to accommodate required changes in trunnion alignment and are a three-piece assembly. If not, provide repair recommendations.

C6.8.1.3.1

6.8.1.3.2—Trunnion Bearings

The following shall supplement *A6.8.1.3.2*.

For bascule type bridges, trunnion bearings shall be bronze sleeve bearings. Rolling element bearings are not recommended.

C6.8.1.3.2

Sleeve bearing friction helps control the bascule span when moving.

6.8.1.4—Buffers

The following shall supplement *A6.8.1.4*.

Buffers are not necessary on hydraulic bascule bridges. Mechanical bascule bridges will most likely still need air buffers because LADOTD currently does not allow PLC control systems. See Figure 6.8.1.5.1-1 – Typical Lock Bar and Air Buffer Layout for a Single Leaf Bascule Bridge,

C6.8.1.4

Most bascule bridges in Louisiana do not have air buffers; in fact, the Causeway bascule bridges had their buffers removed. These buffers were causing maintenance problems and were eventually taken out of the system before they were permanently removed from the bridge. It

below.

shall be noted that these bridges have PLC control systems which provide the soft positive seating. The Causeway bascule bridges are not owned by the LADOTD.

6.8.1.5—Span and Tail Locks, Centering Devices

6.8.1.5.1—Locking Devices

The following shall supplement *A6.8.1.5.1*.

For double leaf bascule bridges:

1. Design span locks attached to the main bascule girders. Provide maintenance access. Do not use tail locks or side locks on new bridge designs.
2. Specify a 4 in. x 6 in. minimum rectangular lock bar, unless analysis shows need for a larger size. Submit design calculations and the selection criteria for review and approval.
3. Install the bar in the guides and receivers with bronze wear fittings top and bottom, properly guided and shimmed. Provide lubrication at the sliding surfaces. Both the front and rear guides are to have a "U" shaped wear-plate that restrains the bar horizontally as well as vertically. The receiver is to have a flat wear-plate to give freedom horizontally to easily insert the lock bar in the opposite leaf. The total vertical clearance between the bar and the wear-shoes must be 0.010 in. to 0.025 in. When specifying the total horizontal clearance, the designer shall account for the thermal expansion of the movable span.
4. Provide adequate stiffening behind the web for support of guides and receivers.
5. Mount guides and receivers with ½ in. minimum shims for adjusting. Slot wear-plate shims for insertion and removal. Consider the ease of field replacing or adjusting shims in the span lock design.
6. Specify alignment and acceptance criteria for complete lock bar machinery, for the bar itself in both horizontal and vertical, and for the bar with the cylinder.

C6.8.1.5.1

Single leaf bascule bridges may not need a 4 in. x 6 in. lock bar, or they may not employ a lock bar at all. They may instead employ a hook lock.

7. Provide lubrication fittings at locations that are convenient for routine maintenance.
8. Mount actuation elements on the lock to activate limit switches controlling each end of the stroke. Incorporate a means to adjust the limit-switch actuation. Taper the receiver end of the lock bar to facilitate insertion into the receivers of the opposite leaf.
9. Connection of the lock bar to the hydraulic cylinder must allow for the continual vibration due to traffic on the leaf. This may be accomplished by providing self-aligning rod-end couplers or cylinders with elongated pinholes on male clevises. Mount limit switches for safety interlocks to sense lock bar position. Mount limit switches for span lock operator controls to sense rod position.
10. Span locks for hydraulically powered assemblies shall utilize a reversing motor-driven pump or a uni-directional pump with 4-way directional valve, and associated valves, piping, and accessories. Specify relief valves to prevent over-pressure should the lock bar jam. Specify pilot-operated check valves in the lines to the cylinder to lock the cylinder piston in place when pressure is removed. Provide a hydraulic hand pump and quick-disconnect fittings on the piping to allow pulling or driving of the lock bar on loss of power. Specify the time of driving or pulling the bar to be under 10 seconds.
11. Design and specify access platforms with access hatches located out of the travel lanes.

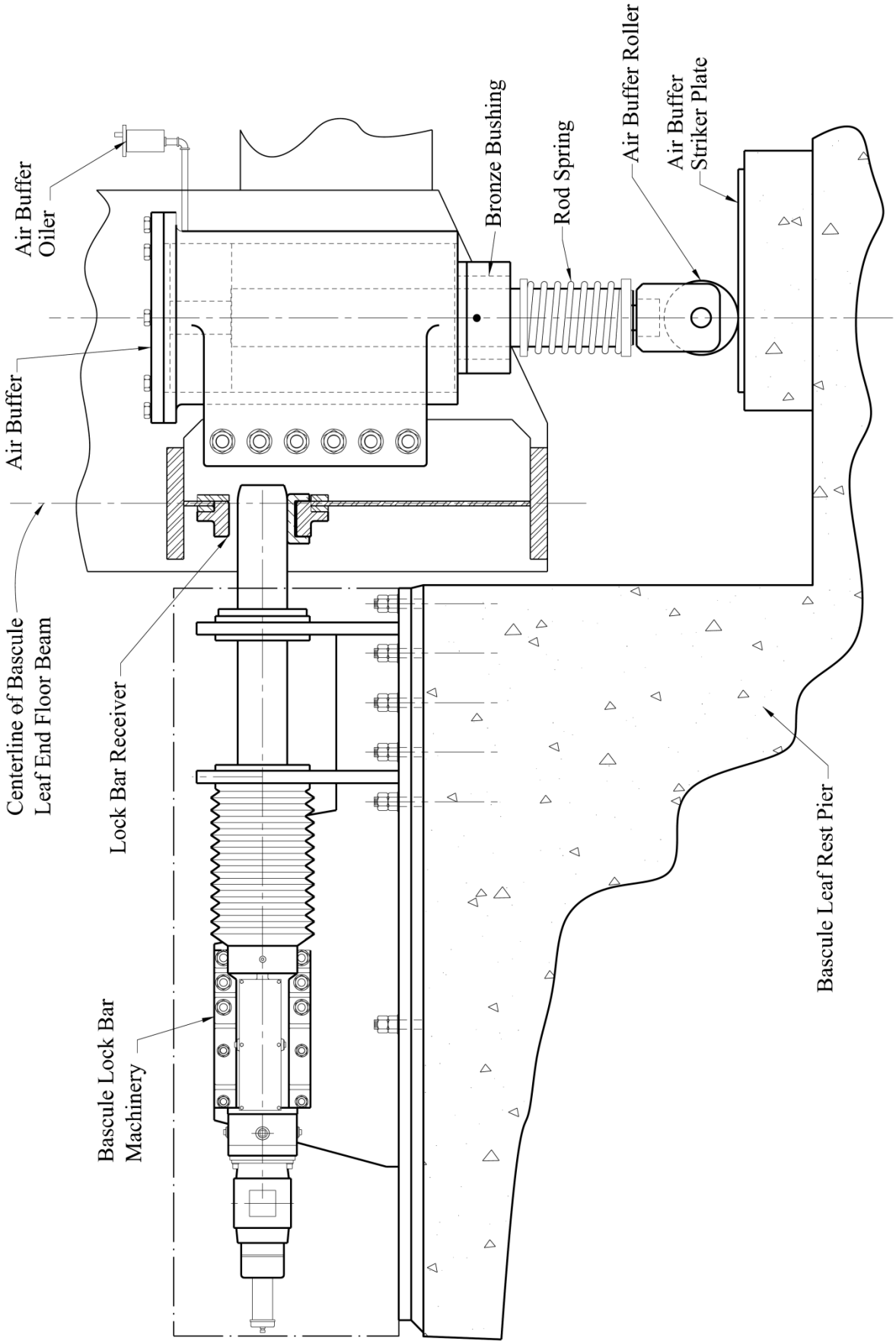

Figure 6.8.1.5.1-1—Lock Bar and Air Buffer Layout for a Single Leaf Bascule Bridge

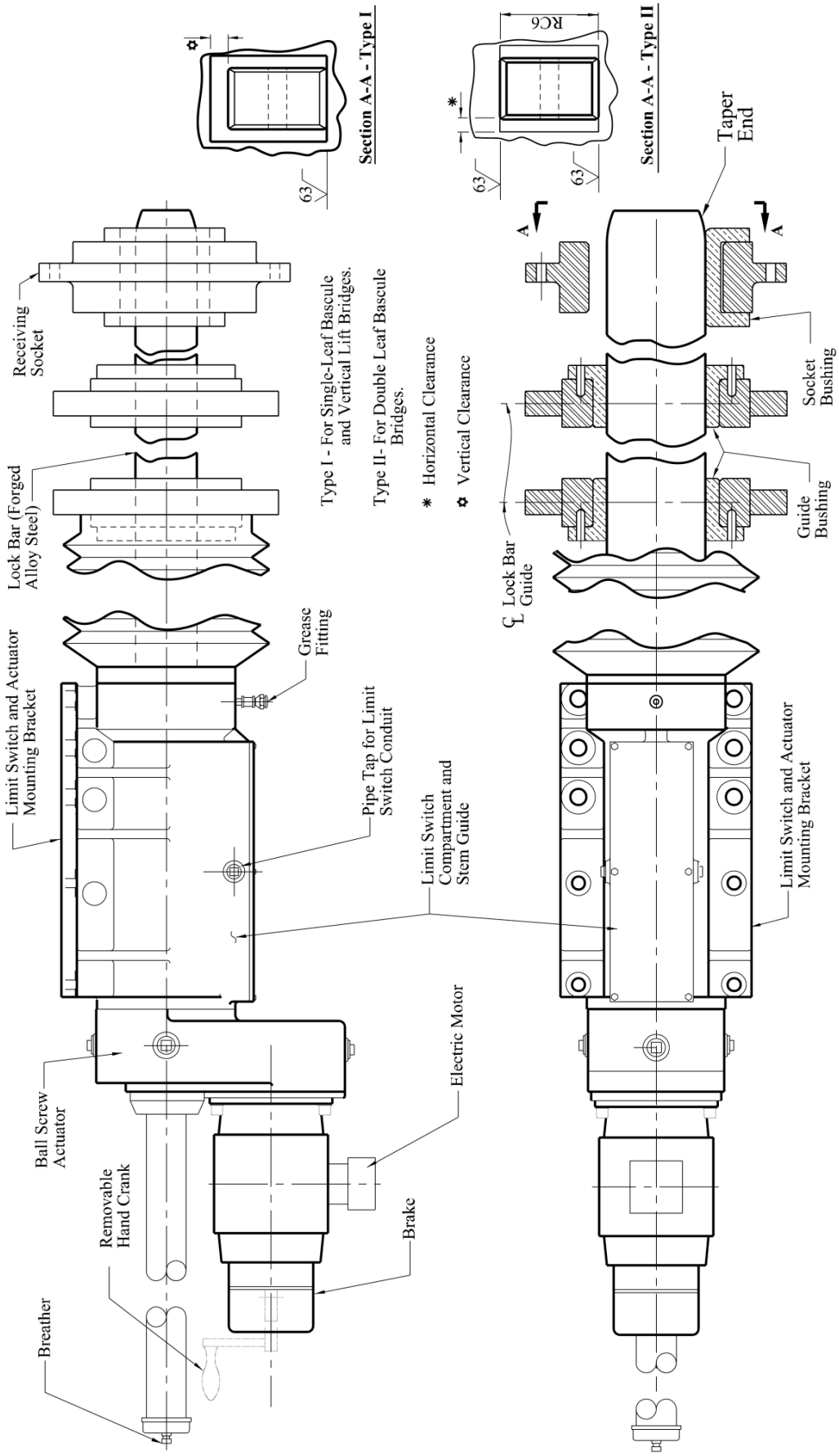

Figure 6.8.1.5.1-2—Lock Bar Assembly

6.8.2—Swing Spans

6.8.2.1—Drive Machinery

The following shall replace the 1st paragraph in *A6.8.2.1*.

Drive machinery for swing spans shall normally include drive motor(s), main reducer, output shafts, and pinions/gears driving the operating rack. There shall be a minimum of two pinions, diametrically opposite, providing equal torque to rotate the span. Either the main gear reducer shall be of the differential type, or equalization of torque shall be provided by another method acceptable to the Bridge Design Engineer Administrator.

The following shall supplement *A6.8.2.1*.

Swing span designs employing a single pinion engaging a rack gear shall be acceptable if the span weighs under 700 kips and the maximum pinion-imposed rack torque force being resisted by the center pivot bearing is less than 2.5 percent of the swing span dead weight.

6.8.2.2—Racks and Pinions

The following shall supplement *A6.8.2.2*.

For rack and pinion swing span bridges, the overhung load on the pinion shaft shall be taken as the radial load produced by the maximum holding load in *A5.5.2* and *D5.5.2*. When the pinion is keyed on to a gear motor, gearbox output shaft, or hydraulic motor output shaft, the Designer must ensure that the manufactured product is capable of taking the overhung load produced by the maximum holding requirements.

The pinion shall be 1 in. lesser (½ in. on each side) in face width than the mating rack gear.

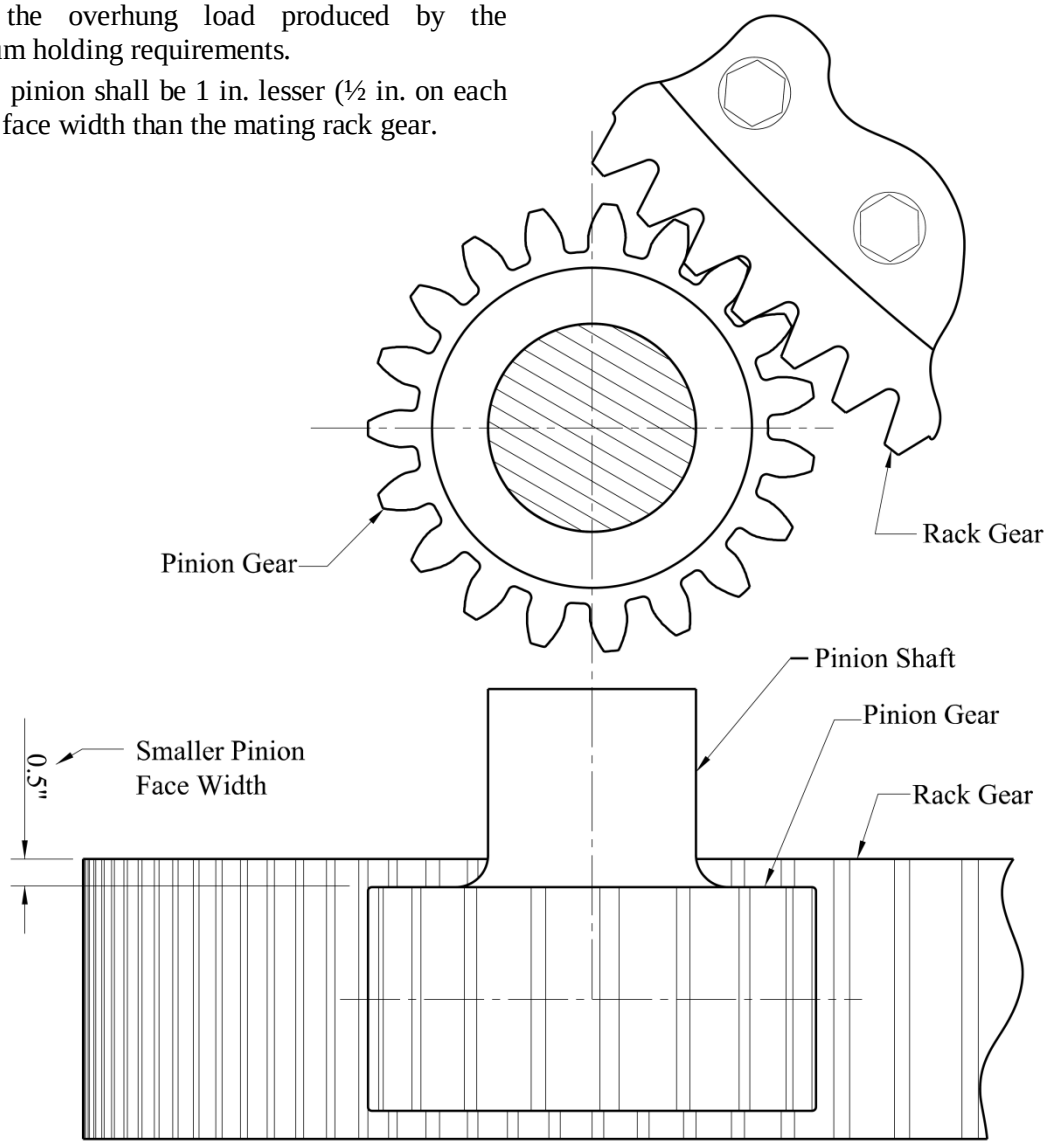

Figure 6.8.2.2-1—Typical Pinion and Rack Gear Assembly for a Mechanical Swing Span Bridge

6.8.2.3—Pivot Bearing

The following shall supplement *A6.8.2.3*.

Spherical roller thrust bearings are not to be used for this application unless requested by LADOTD.

Disc bearing assemblies shall be used for swing span bridges.

Housing shall come complete with oil level sight glass, oil fill port, oil drain port, air vent plug, seals, and non-corrosive metallic nameplates.

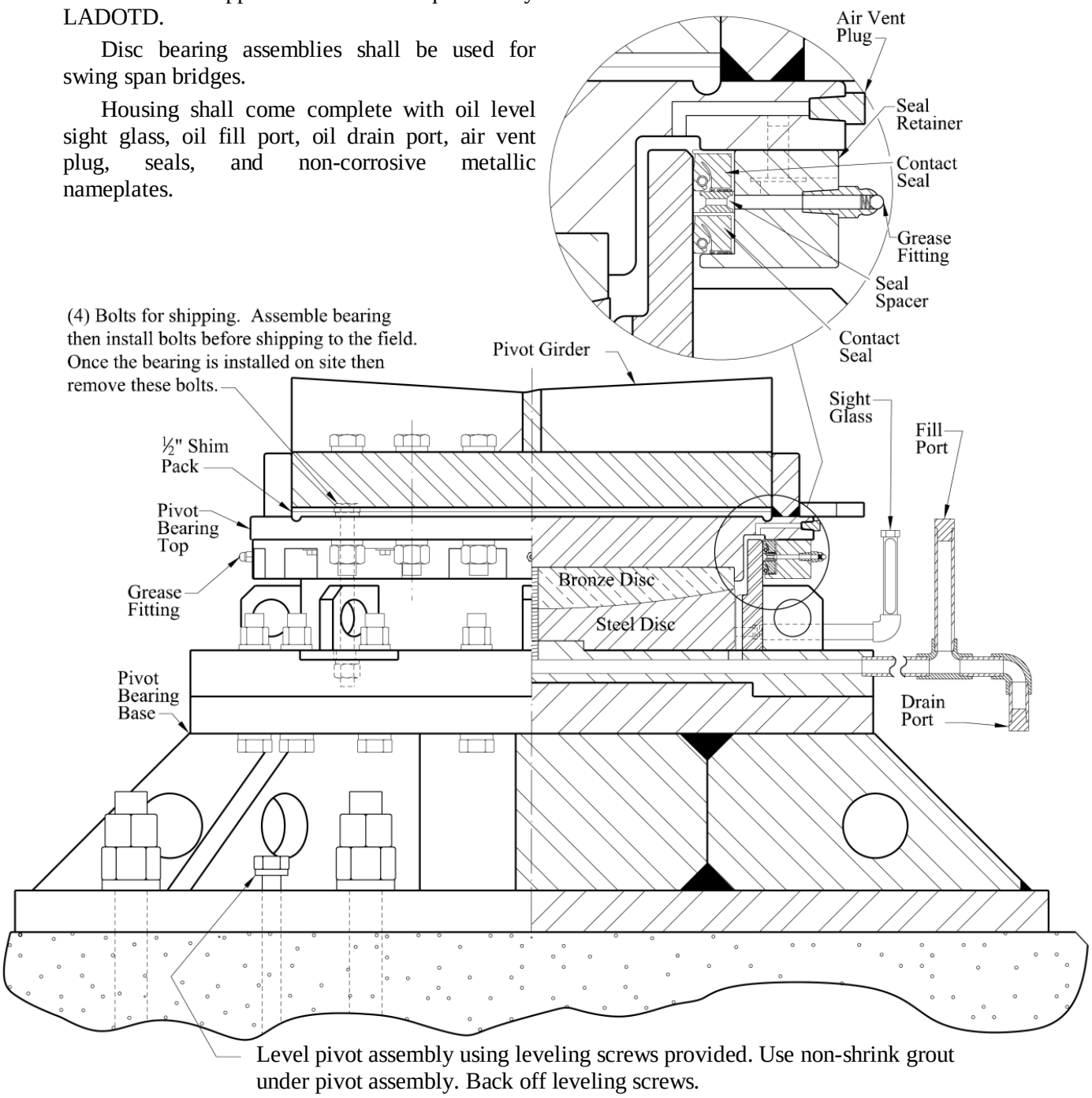

Figure 6.8.2.3-1—Disc Bearing Assembly

The above figure shows the disc bearing assembly with some of the preferred features.

6.8.2.4—End Lifts

The following shall supplement *A6.8.2.4*.

Span end lift wedges shall be designed to remain in their final set position upon loss of drive power.

Wedge drive linkages for mechanically powered assemblies are to be adjustable to allow being set at full-rotation drive position (i.e. straight axial linkage). This allows the use of the gear reduction drive line to maintain wedge positioning.

Hydraulic driven wedges shall utilize roller wedges with "over-the-hump" shoes to maintain static no-power positioning.

Due to the new *AASHTO LRFD Bridge Design Specifications* and permit vehicle loads, the end lifts may not be strong enough for future bridges. The engineer may consider material other than ASTM A668 or alternate designs.

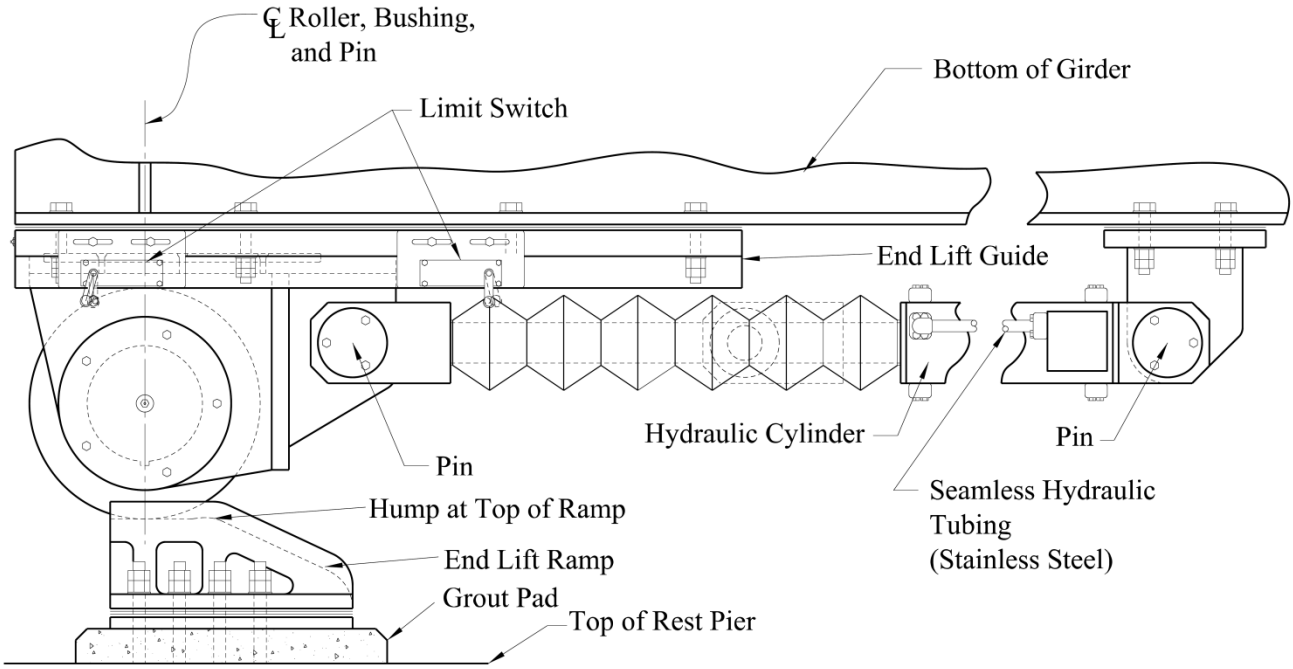

Figure 6.8.2.4-1—Typical Hydraulic End Lift Assembly

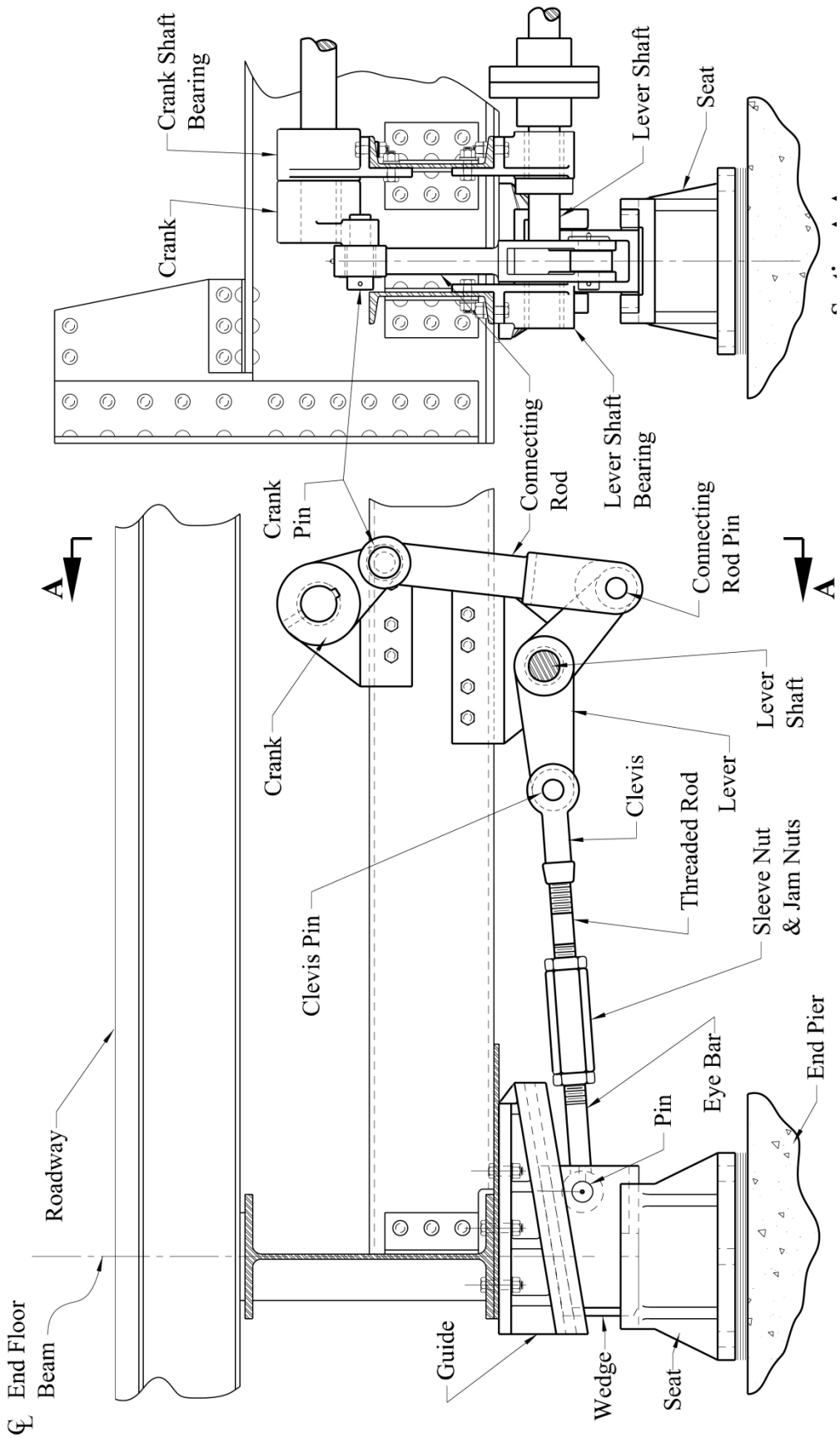

Figure 6.8.2.4-2—Typical Mechanical End Lift Assembly

6.8.2.5—Center Wedges

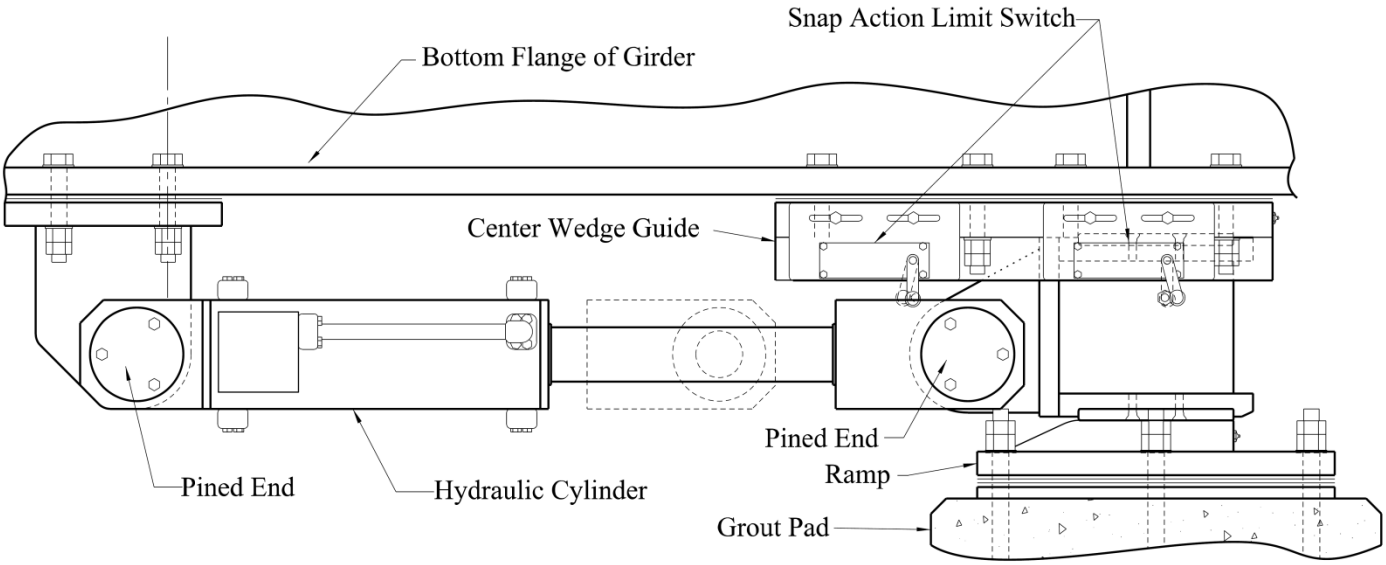

Figure 6.8.2.5-1—Typical Center Wedge Assembly

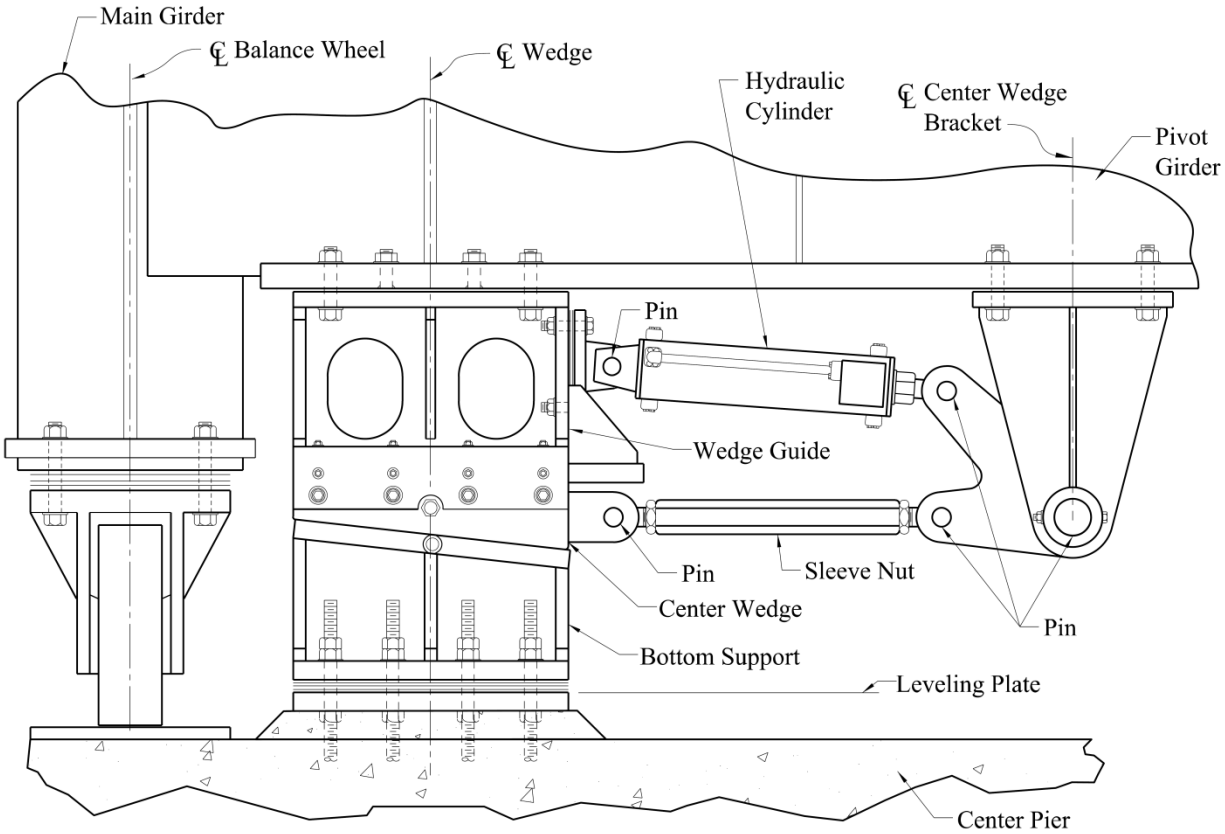

Figure 6.8.2.5-2—Typical Center Wedge Assembly

6.8.2.6—Balance Wheels

The following shall replace the 2nd sentence in the 1st paragraph of *A6.8.2.6*.

The maximum overturning moment shall be determined using wind loading as defined in *A5.4.3* and *D5.4.3*.

C6.8.2.6

Ice loading may be neglected for bridges in Louisiana.

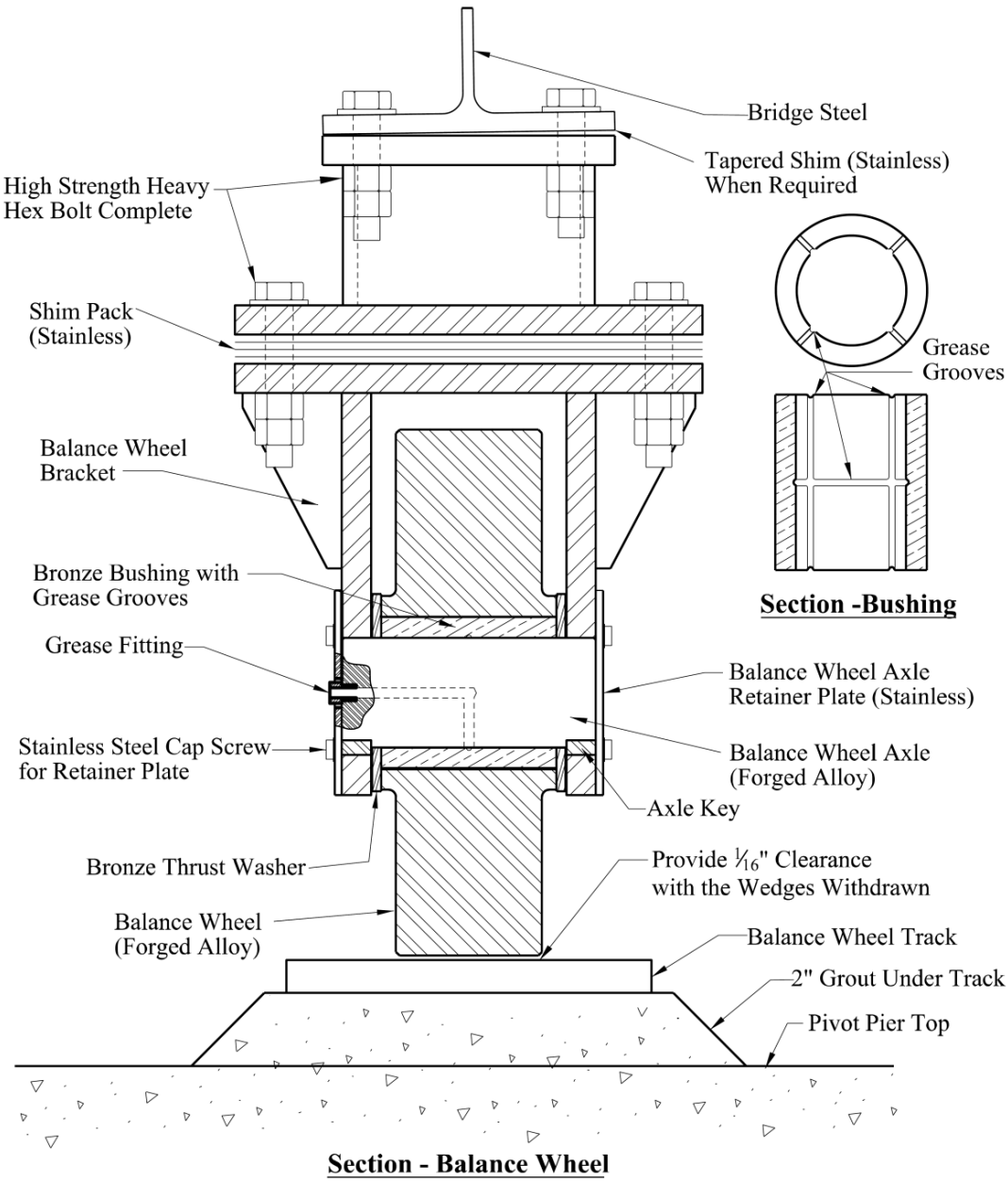

Figure 6.8.2.6-1—Typical Balance Wheel Assembly

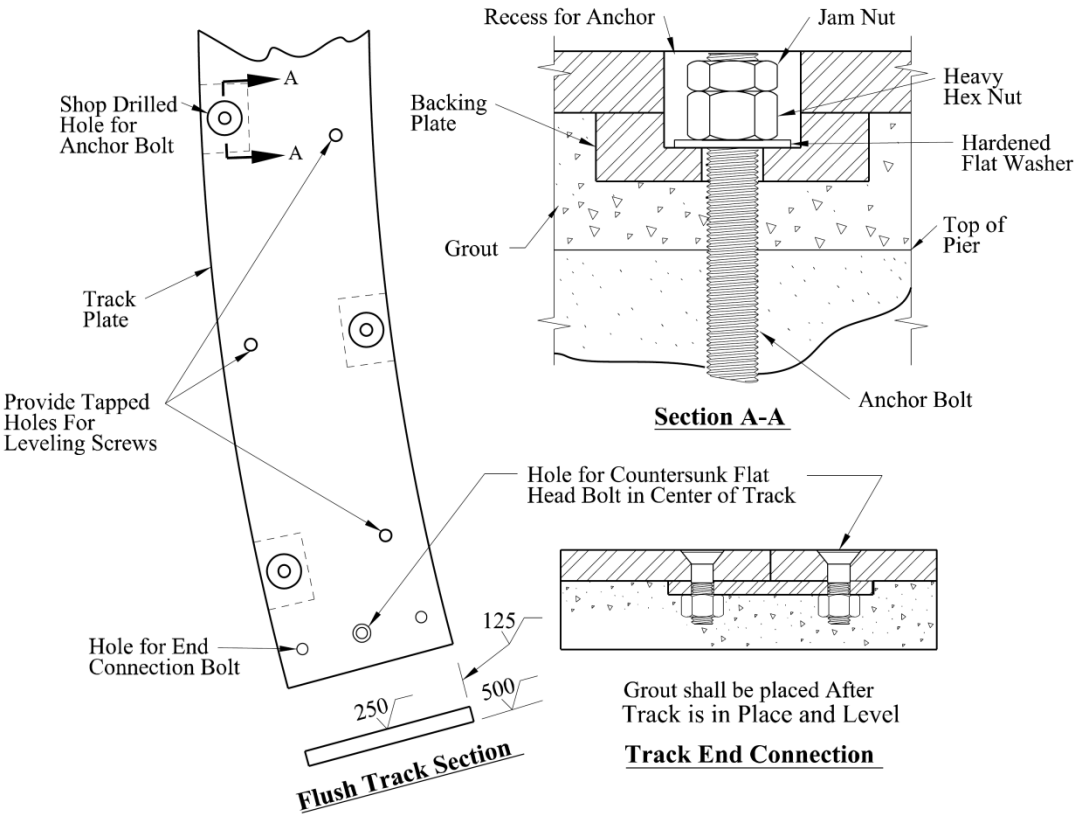

Figure 6.8.2.6-2—Flush Balance Wheel Track Example

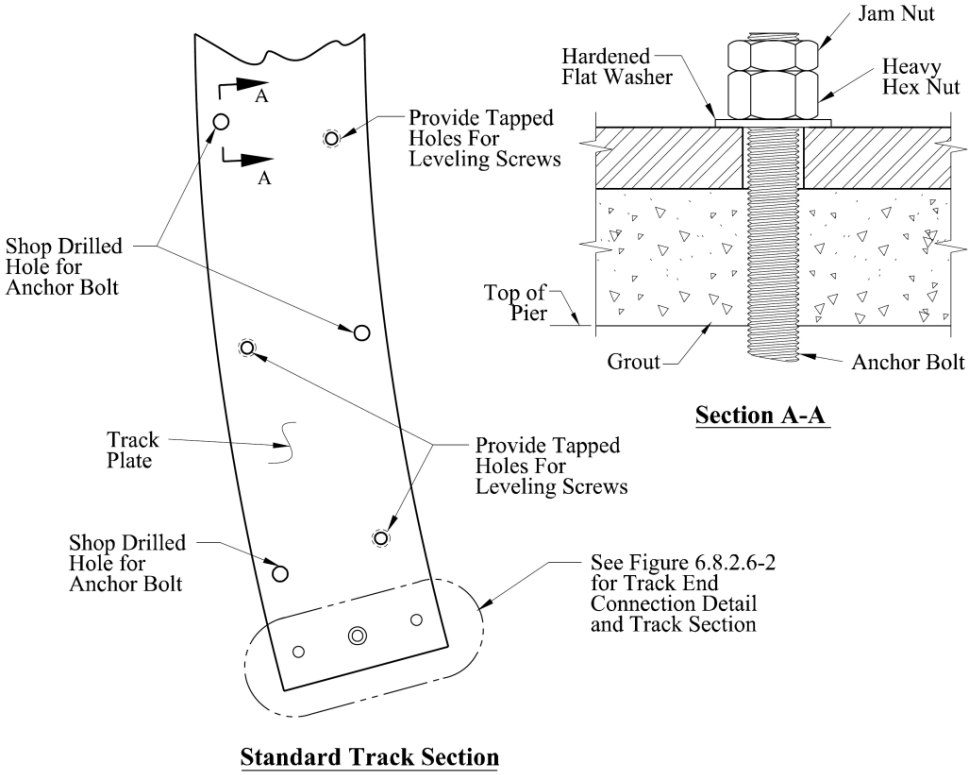

Figure 6.8.2.6-3—Standard Balance Wheel Track Example

6.8.2.7—Rim Bearing Wheels

The following shall supplement *A6.8.2.7*.

Rim bearing or combined rim and center bearing designs shall not be used unless approved by the Bridge Design Engineer Administrator.

6.8.2.8—Tracks

The following shall supplement *A6.8.2.8*.

The tracks defined here are for rim bearing wheels and are not for balance wheels.

6.8.2.9—Centering Devices

The following shall supplement *A6.8.2.9*.

Swing spans that use flared ramps for the end lifts do not need centering devices, provided the bridge control system stops the bridge in the closed position reliably enough to successfully drive the end lifts.

The following shall replace the 2nd sentence on *A6.8.2.9*.

The centering device(s) shall preferably be located on the centerline of the bridge, as near the roadway level as practicable, with a total clearance not to exceed ± ¼ in.

C6.8.2.9

The end lift ramps shall have flares capable of centering the bridge when the end lifts are driven. The flares shall allow as much as ± 1 in. from the center.

6.8.2.10—Span Locks

The following shall supplement *A6.8.2.10*.

Span locks are not needed for swing spans provided that the end lifts sufficiently pin the bridge in the closed position.

For swing spans normally kept in the open position, span locks shall be used and designed to hold the bridge open against the wind loads defined in *A5.4.3* and *D5.4.3*.

C6.8.2.10

A span lock located at the center pier should be used if the swing span is normally kept in the open position.

6.8.3—Vertical Lift Spans

6.8.3.1—Span Drive Vertical Lifts

The following shall supplement *A6.8.3.1*.

The primary design of a vertical lift bridge

C6.8.3.1

Span drive vertical lift bridges have the

shall be that of the tower drive design.

A span drive vertical lift bridge shall only be allowed with the approval of the Bridge Design Engineer Administrator.

6.8.3.2—Tower Drive Vertical Lifts

6.8.3.2.1—Drive Machinery

The following shall supplement *A6.8.3.2.1*.

The primary gear reducer shall have two non-differential input shafts parallel with two output shafts. The input shafts shall be designed for twice the rated horsepower of the speed reducer.

The output shafts shall be capable of differential output and shall also be capable of being locked together to act as one shaft by means of a manual clutch mechanism.

operating span machinery located on the moving span and require operating cables and drums to accomplish span movement. This configuration makes the bridge more difficult to maintain and exposes the span machinery to storm surge.

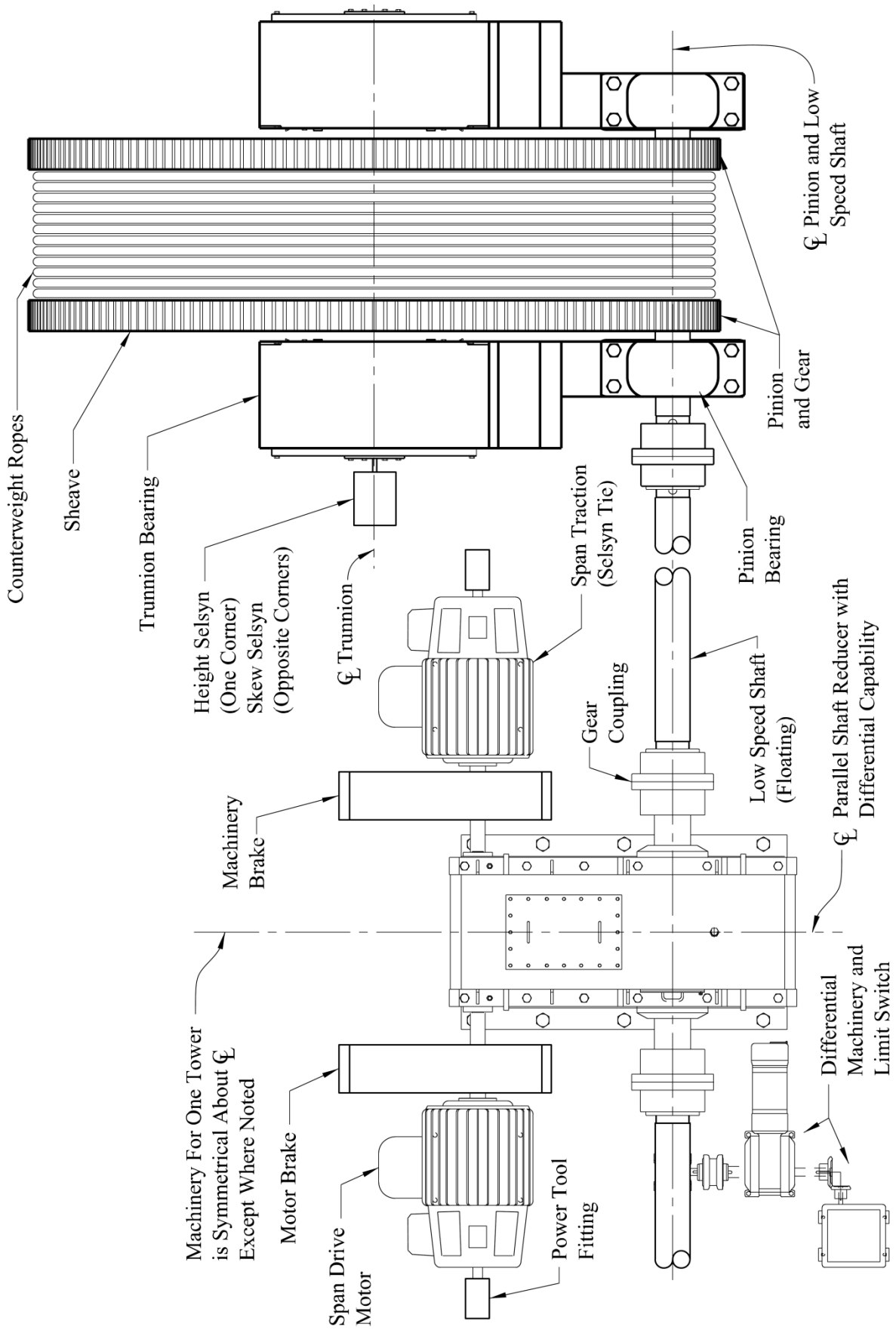

Figure 6.8.3.2.1—Tower Drive Machinery for a Vertical Lift Bridge

6.8.3.2.2—Ring Gears and Pinions

The following shall supplement *A6.8.3.2.2*.

The Designer shall give the fabricator the option of making the ring gear as one monolithic piece.

The pinion shall be 1 in. greater (½ in. on each side) in face width than the mating rack gear.

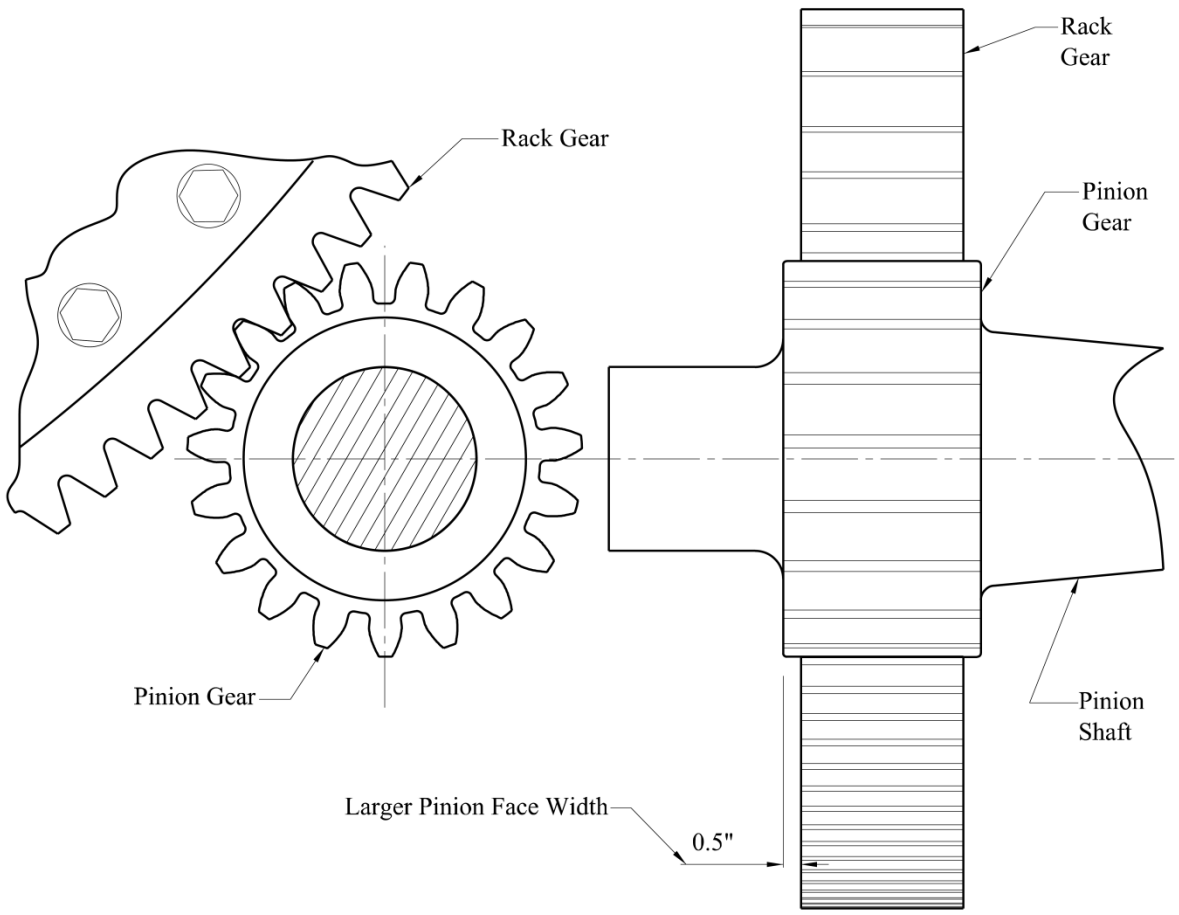

Figure 6.8.3.2.2-1—Pinion and Ring Gear Assembly - Tower Drive Vertical Lift Bridge

6.8.3.3—Wire Ropes and Sockets

The following shall supplement *A6.8.3.3*.

Wire ropes shall comply with the latest edition of the *Louisiana Standard Specifications for Roads and Bridges.*

6.8.3.3.1—Diameter of Wire Ropes

C6.8.3.3.1

After installation and tensioning of the counterweight ropes, it is recommended that the Contractor shall measure the "as-installed" diameter of each rope and furnish these diameters to the Bridge Design Engineer Administrator. This will provide a baseline diameter to compare to when inspecting/measuring the ropes in the future.

6.8.3.3.2—Construction

C6.8.3.3.2

The following shall supplement *A6.8.3.3.2*.

Wire rope cores shall either be Hard Fiber Core (HFC) or an Independent Wire Rope Core (IWRC). Hard Fiber Cores for wire rope shall be of polypropylene fiber. Polypropylene fibers shall meet the requirements of MIL-P-24216, shall be of commercial quality, and shall be thoroughly cleaned, free of waste, evenly twisted, of uniform plies, and of good workmanship.

Zinc coating:

Zinc shall be in accordance with ASTM B6, High Grade (HG).

The weight of the zinc coating on the individual wires prior to the fabrication of the wire rope shall be not less than that specified in ASTM A1023.

Zinc coating shall be free from uncoated spots, lumps, pits, blisters, gritty areas, dross, and flux.

Lubrication during wire rope fabrication

All portions of wire ropes shall be lubricated during fabrication with a lubricant containing a rust inhibitor. The rope lubricant shall be approved by the Bridge Design Engineer Administrator and must be compatible with the approved field lubrication. Wire ropes shall be tested according to the latest edition of the *Louisiana Standard Specifications for Roads and Bridges*.

This specification has been taken from the 1988 *AASHTO Specifications for Movable Highway Bridges*.

6.8.3.3.6—Wire Rope Tensile Strengths

The following shall supplement *A6.8.3.3.6*.

The Appendix of this chapter contains rope selection tables based on the weight of the lift span and the number of cables required for EIPS, and EIPS galvanized wire rope. Also contained in the Appendix is a table to be used when determining the sheave diameter and sheave groove diameter based on rope diameter.

IPS is no longer allowed by the LADOTD.

The following shall replace *Table 6.8.3.3.6-1*.

Table 6.8.3.3.6-1a—Physical Properties of Wire Rope with IWRC

Diameter (in.)	Weight per Length (lb./ft.)	Minimum Ultimate Strength (kips)			
		EIPS with IWRC		EEIPS with IWRC	
		Bright	Galvanized	Bright	Galvanized
1/2	0.46	26.6	23.9	29.2	26.3
9/16	0.58	33.6	30.2	37.0	33.3
5/8	0.72	41.2	37.1	45.4	40.9
3/4	1.04	58.8	52.9	64.8	58.3
7/8	1.41	79.6	71.6	87.6	78.8
1	1.85	103.4	93.1	113.8	102.4
1-1/8	2.34	130.0	117.0	143.0	128.7
1-1/4	2.89	159.8	143.8	175.8	158.2
1-3/8	3.49	192.0	172.8	212.0	190.8
1-1/2	4.16	228.0	205.2	250.0	225.0
1-5/8	4.88	264.0	237.6	292.0	262.8
1-3/4	5.66	306.0	275.4	338.0	304.2
1-7/8	6.49	348.0	313.2	384.0	345.6
2	7.39	396.0	356.4	434.0	390.6
2-1/8	8.34	442.0	397.8	486.0	437.4
2-1/4	9.35	494.0	444.6	544.0	489.6
2-3/8	10.42	548.0	493.2	602.0	541.8
2-1/2	11.60	604.0	543.6	664.0	597.6

Table 6.8.3.3.6-1b—Physical Properties of Wire Rope with HFC

Diameter (in.)	Weight per Length (lb./ft.)	Minimum Ultimate Strength (kips)			
		EIPS with HFC		EEIPS with HFC	
		Bright	Galvanized	Bright	Galvanized
1/2	0.42	23.6	21.2	25.8	23.2
9/16	0.53	29.8	26.8	32.6	29.3
5/8	0.66	36.8	33.1	40.4	36.4
3/4	0.95	52.4	47.2	57.6	51.8
7/8	1.29	70.8	63.7	78.0	70.2
1	1.68	92.0	82.8	101.2	91.1
1-1/8	2.13	115.8	104.2	127.2	114.5
1-1/4	2.63	142.2	128.0	156.4	140.8
1-3/8	3.18	171.0	153.9	188.0	169.2
1-1/2	3.78	202.0	181.8	222.0	199.8
1-5/8	4.44	236.0	212.4	258.0	232.2
1-3/4	5.15	272.0	244.8	300.0	270.0
1-7/8	5.91	310.0	279.0	342.0	307.8
2	6.73	352.0	316.8	388.0	349.2
2-1/8	7.60	394.0	354.6	434.0	390.6
2-1/4	8.52	440.0	396.0	484.0	435.6
2-3/8	9.49	488.0	439.2	538.0	484.2
2-1/2	10.50	538.0	484.2	590.0	531.0

6.8.3.3.7—Wire Rope Sockets

The following shall supplement *A6.8.3.3.7*.

All sockets used with wire ropes shall be made from forged solid blanks ASTM A668, Class D minimum, without the use of welding. For 1 ½" diameter wire rope sockets, ASTM A148 grade 80-50 cast steel may be used. All sockets shall conform to the requirements of the latest revision of Federal Specification RR-S-550, and shall be stronger than the wire rope. The sockets shall be neatly finished to the exact dimensions shown on the contract drawings.

All socket pins shall be class C normalized-steel forgings or shall be machined from hot-rolled ASTM A29 alloy steels, such as grades E4130 or 8620, and subsequently normalized or quenched and tempered to attain a 50 ksi minimum yield strength and 80 ksi minimum tensile strength. In every case, the dimensions of the sockets shall be such that no part under tension

C6.8.3.3.7

Example Counterweight Rope Design

A rope and socket design that has been used on the Prospect Street vertical lift bridge is described below.

A socket containing a threaded rod for rope tension adjustment is utilized on the span side connection.

The design and specification of counterweight ropes for movable bridges shall adhere to *Section 821.07.31* of the latest edition *Louisiana Standard Specifications for Roads and Bridges.*

All span side rope sockets shall be installed with a space between the shim top and the bottom of the lift head, see Figure 6.8.3.3.7-1 – Counterweight Rope Assembly, below. The shims are only for reference and are not intended to bear on any surface.

shall be stressed higher than 90 percent of yield strength when the rope is stressed to its specified ultimate strength.

The zinc used in attaching the sockets must not be too hot or it will anneal the wires. The correct temperature range for zinc for this purpose is from 850° Fahrenheit to 1050° Fahrenheit. Filling of the socket with zinc must be performed in one continuous operation.

The ropes shall be installed with the set screw on the span side block facing out in order to set the threaded rod during their installation on the bridge. After the wire ropes have been installed to the dimensions shown on the plans, the tension in each rope shall be determined and then the rope lengths shall be adjusted using the hex nut on the threaded rod. When the tension is equalized throughout all of the ropes, the lock nut shall be tightened.

The Contractor must use an approved method to verify rope tension equality.

After all tension adjustments are completed and the bridge operated at least four times, rope tensions shall be rechecked. The tensions in the counterweight rope shall not differ by more than 8 percent of each other. Upon completion of the project, rope tension or frequency shall be submitted to the Bridge Design Engineer Administrator in report form.

See Figures 6.8.3.3.7-1 – Counterweight Rope Assembly and 6.8.3.3.7-2– Wire Rope and Socket Assembly, below.

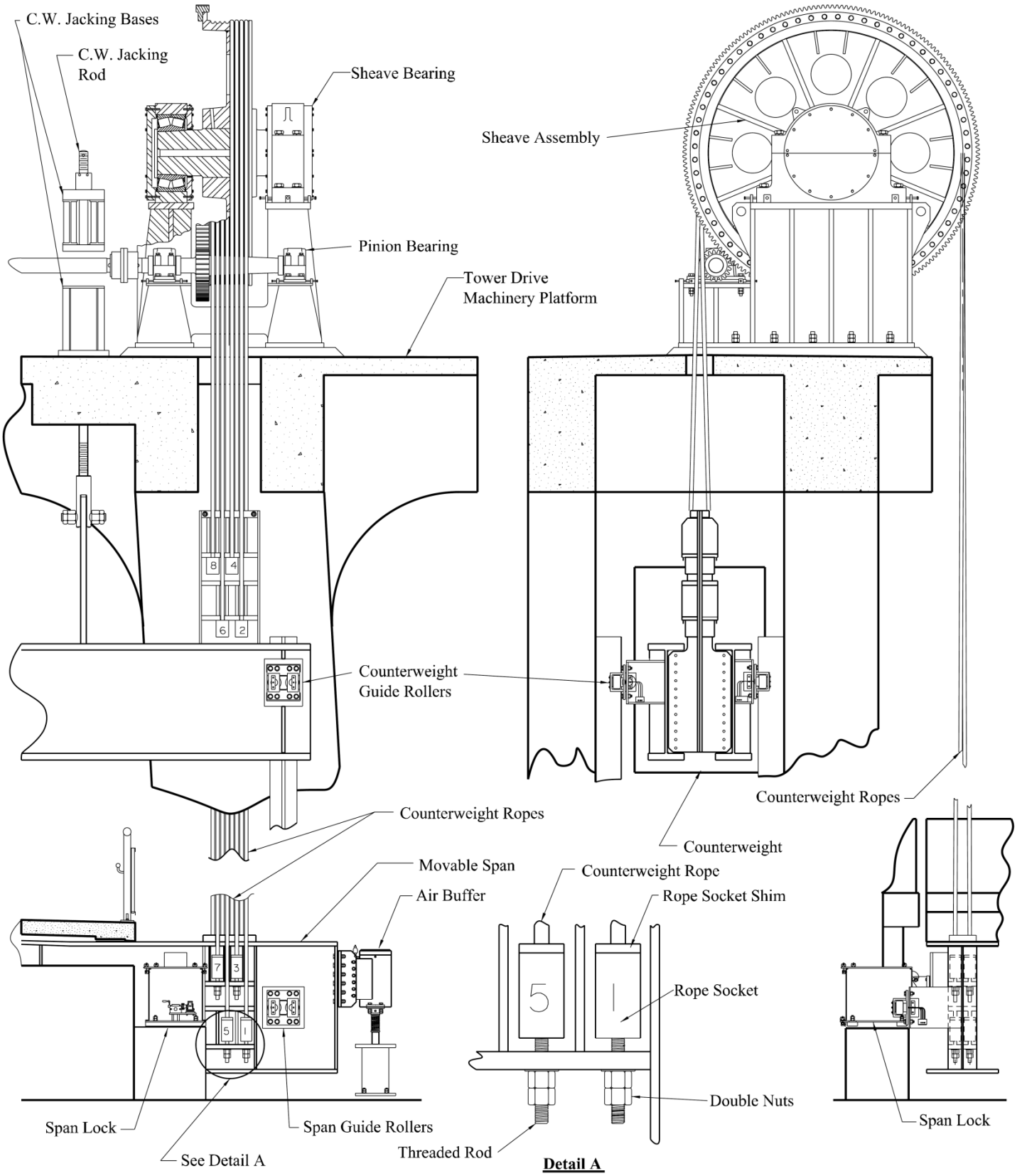

Figure 6.8.3.3.7-1—Counterweight Rope Assembly

The above figure shows the design for equal rope lengths. The figure was taken from the Prospect Bridge contract drawings, LADOTD 2009,State Project 065-91-0016.

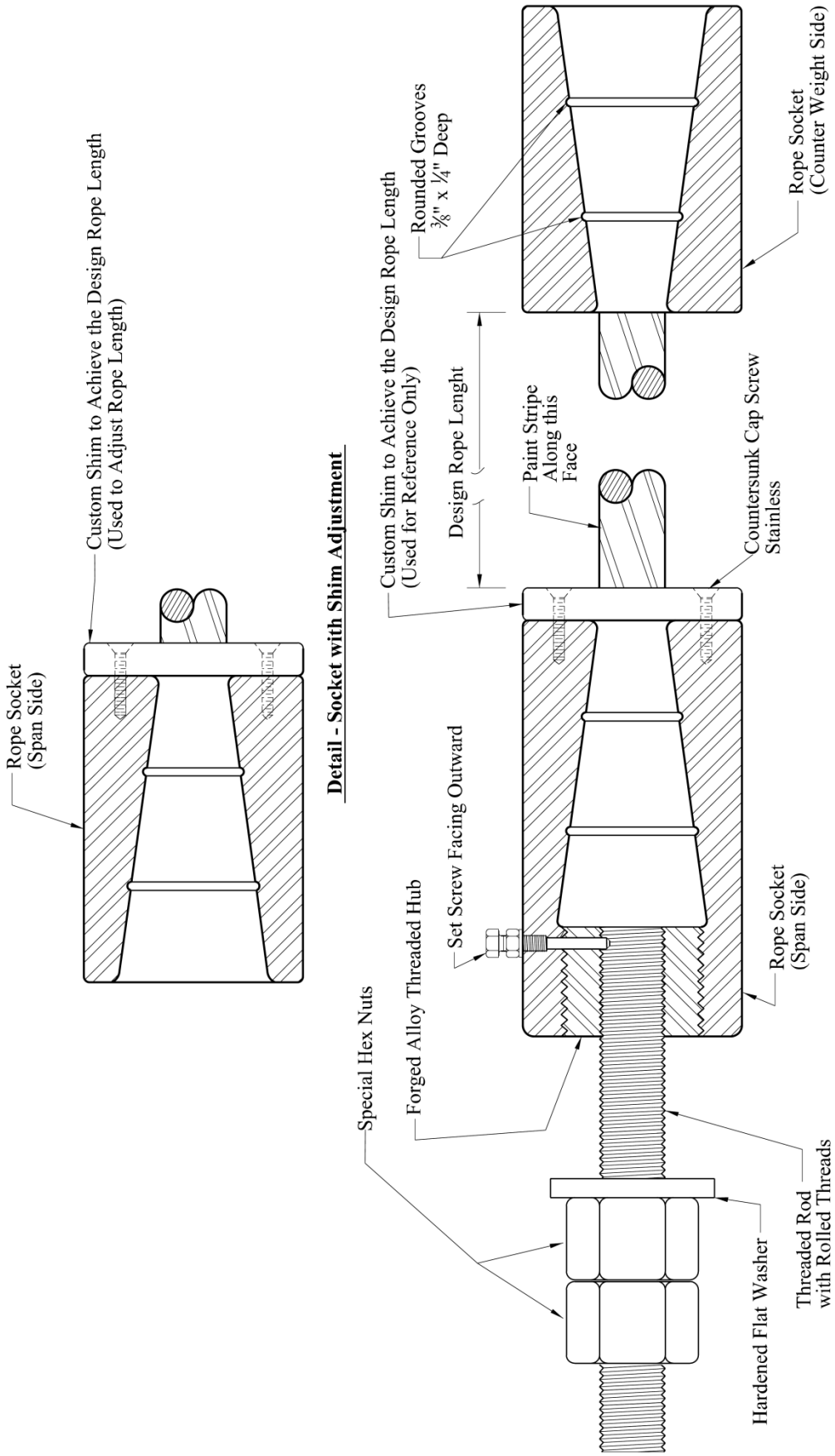

Figure 6.8.3.3.7-2—Wire Rope and Socket Assembly

6.8.3.4—Sheaves

6.8.3.4.1—General

The following shall supplement *A6.8.3.4.1*.

Sheave rims and hubs shall be one-piece forged whenever practical.

Sheave rims, hubs, web, and stiffener plates shall be designed to utilize similar low-strength steels that are weldable and have similar stress relieving temperatures.

Common steel types include:

ASTM A709, grade 36;- ASTM A668 class D

ASTM A709 grade 50 – ASTM A668 class G

6.8.3.4.2—Counterweight Sheaves

The following shall supplement *A6.8.3.4.2*. Sheaves having 10 cables or fewer shall be of the single web design.

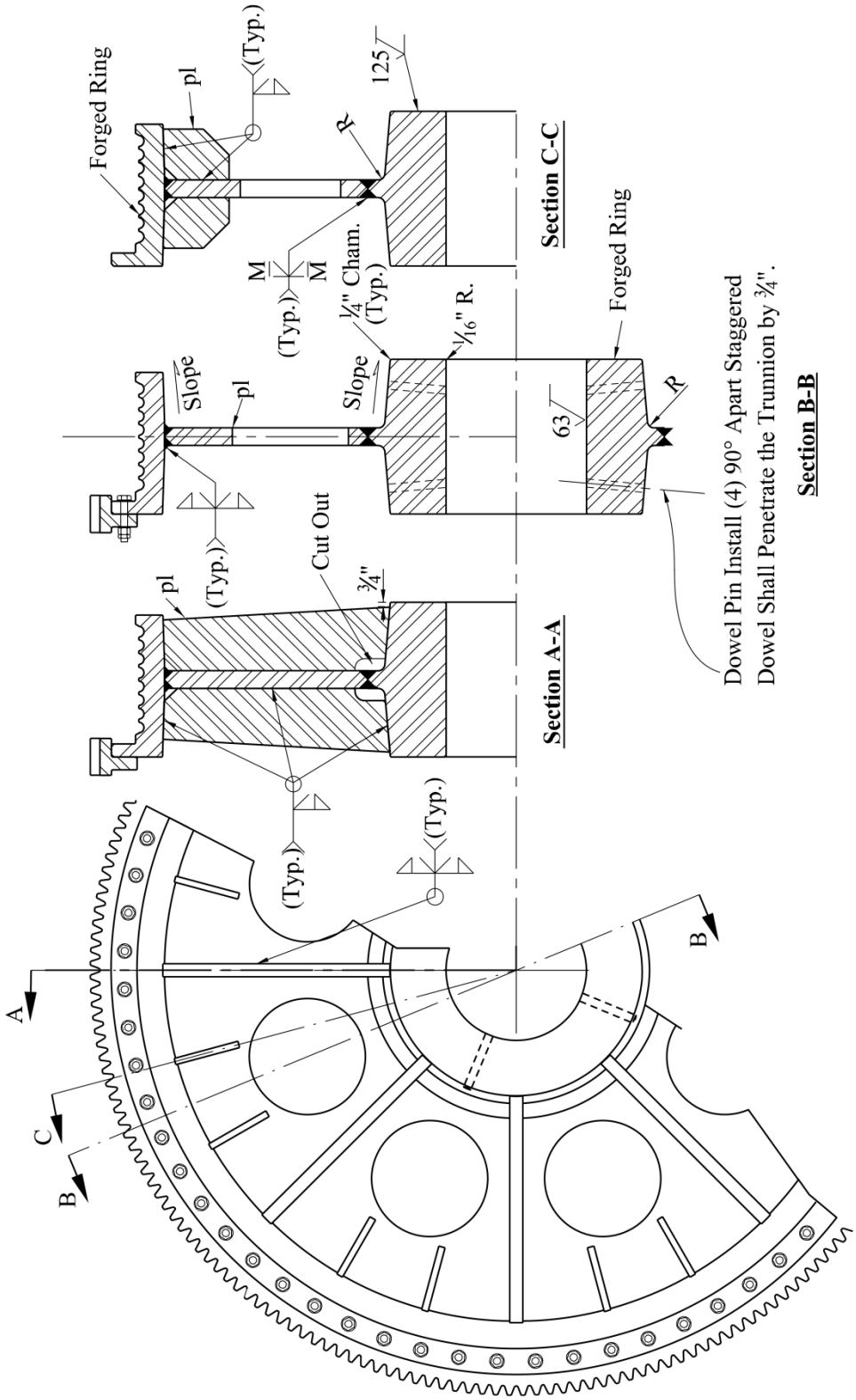

Figure 6.8.3.4.2-1—Single Web Counterweight Sheave

The above figure shows a single web sheave's typical welds, slopes, radii, and chamfers.

6.8.3.4.3—Sheave Trunnions and Bearings

The following shall supplement *A6.8.3.4.3*.

Trunnions:

1. FN3 and greater fits are not recommended between trunnions and their hubs. See *A6.7.9.1* and *D6.7.9.1*.
2. Provide shoulders with fillets of appropriate radii.
3. Provide clearances for thermal expansion between shoulders and bearings.
4. Do not use keys between the trunnion and the hub.
5. For trunnions over 8 in. diameter, provide a hole 1/5 the trunnion diameter lengthwise through the center of the trunnion.
6. In addition to the shrink fit, drill and fit dowels of appropriate size through the hub into the trunnion after the trunnion is in place. The dowels shall have a means to vent air when they are being installed.
7. Three of the trunnions shall have a small shaft attached to the outboard end extending thru the bearing housing to accommodate the height selsyn and skew control equipment.

Bearings:

1. Spherical roller bearings shall preferably be used for this application. Selection of these bearings shall be done under the guidance of the bearing manufacturer.
2. The bearing housing end caps shall have ports with stainless-steel or bronze plugs for grease testing and bearing inspections.
3. For more on bearing design and selection see *A6.7.7.2* and *D6.7.7.2*.

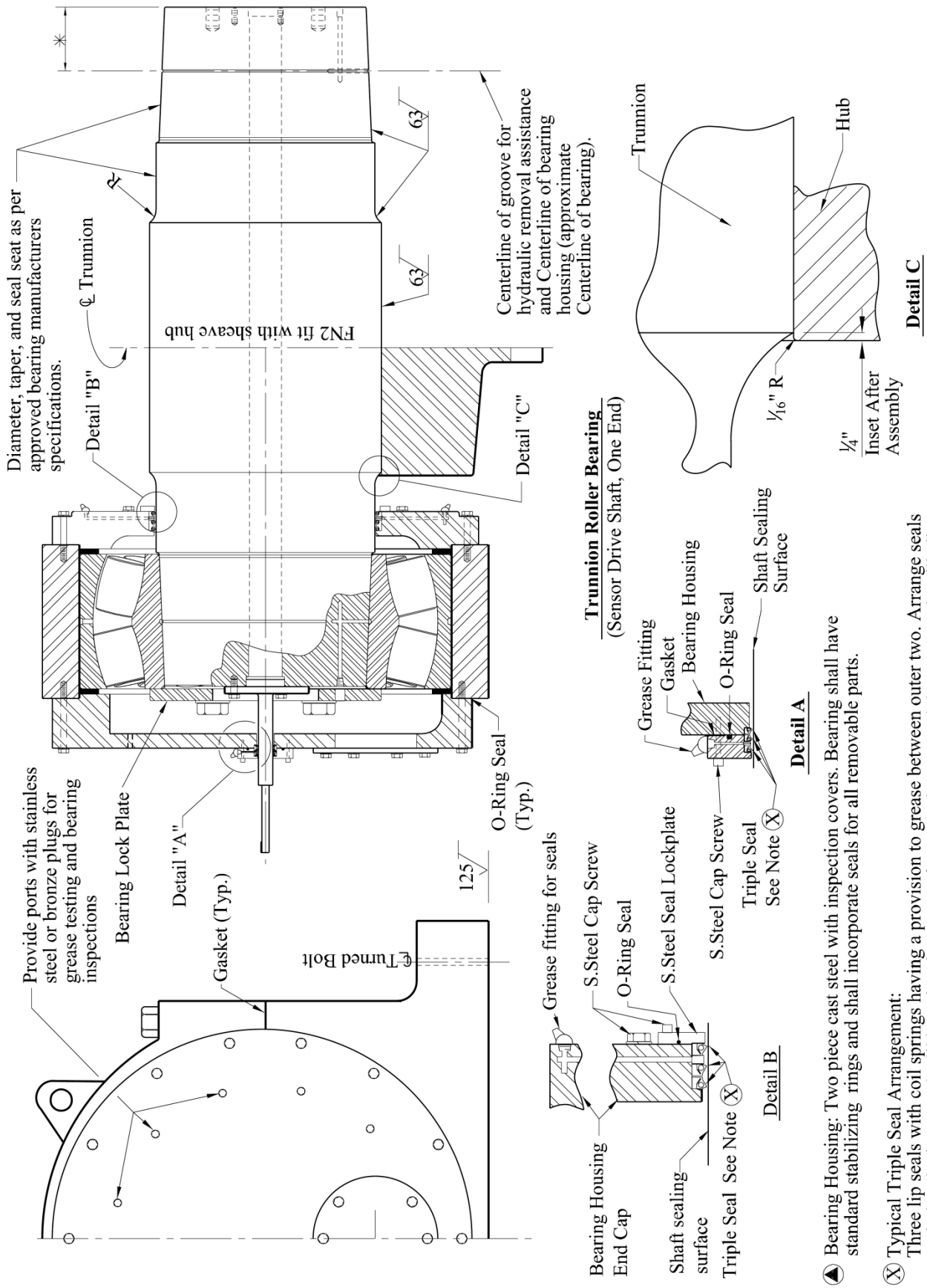

◀ Bearing Housing: Two piece cast steel with inspection covers. Bearing shall have standard stabilizing rings and shall incorporate seals for all removable parts.

Ⓧ Typical Triple Seal Arrangement:
Three lip seals with coil springs having a provision to grease between outer two. Arrange seals such that the inner seal will keep bearing grease from seeping out and the outer seals will allow contaminents to purge out from housing when grease is pumped between the two. See details A and B.

Figure 6.8.3.4.3-1—Trunnion Spherical Roller Bearing Assembly

6.8.3.5—Counterweights and Rope Anchorages

6.8.3.5.2—Counterweights and Rope Anchorages

The following shall supplement *A6.8.3.5.2*.

All Vertical Lift Bridges shall be designed to accommodate the securing, raising and holding of the counterweight while in the span down position (under traffic) to allow for wire rope replacement. All ancillary structural devices/facilities will be part of the Project and are to be provided/ stored at the bridge site.

See Figure 6.8.3.3.7-1 – Counterweight Rope Assembly, above. This drawing shows the counterweight jacking rods and bases.

6.8.3.5.3—Clearance Below Counterweights

This clearance is when the span is in the "*past open*" position.

C6.8.3.5.3

LADOTD requires the span to open 5 ft. above permit height. For "past open," use 2 ft. above roadway. For "normal open," use 7 ft. above roadway. The "past open" condition must also account for barriers, access ladders, guard rails, or hand rails.

6.8.3.6—Buffers

The following shall supplement *A6.8.3.6*.

The following figure represents a typical air buffer used on vertical lift bridges in Louisiana.

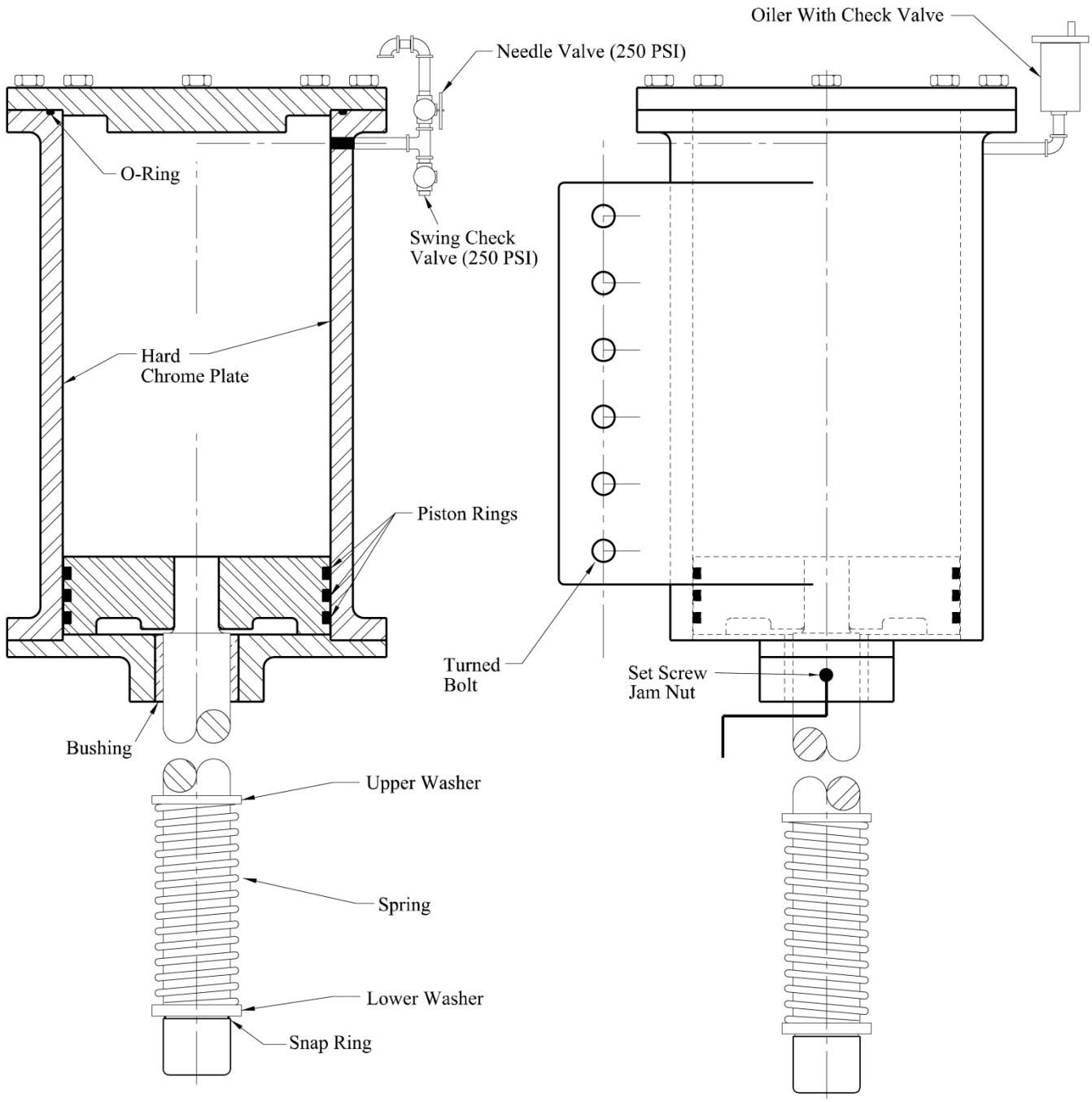

Figure 6.8.3.6-1—Typical Air Buffer Used on a Vertical Lift Span

6.8.3.7—Span Locks and Centering Devices

6.8.3.7.1—Locking Devices

The following figure is an example of the type of span lock used on vertical lift bridges in Louisiana. Other types of span locks are also used and include the lock bar type. See Figure 6.8.1.5.1-1 – Typical Lock Bar Assembly for a Bascule Bridge.

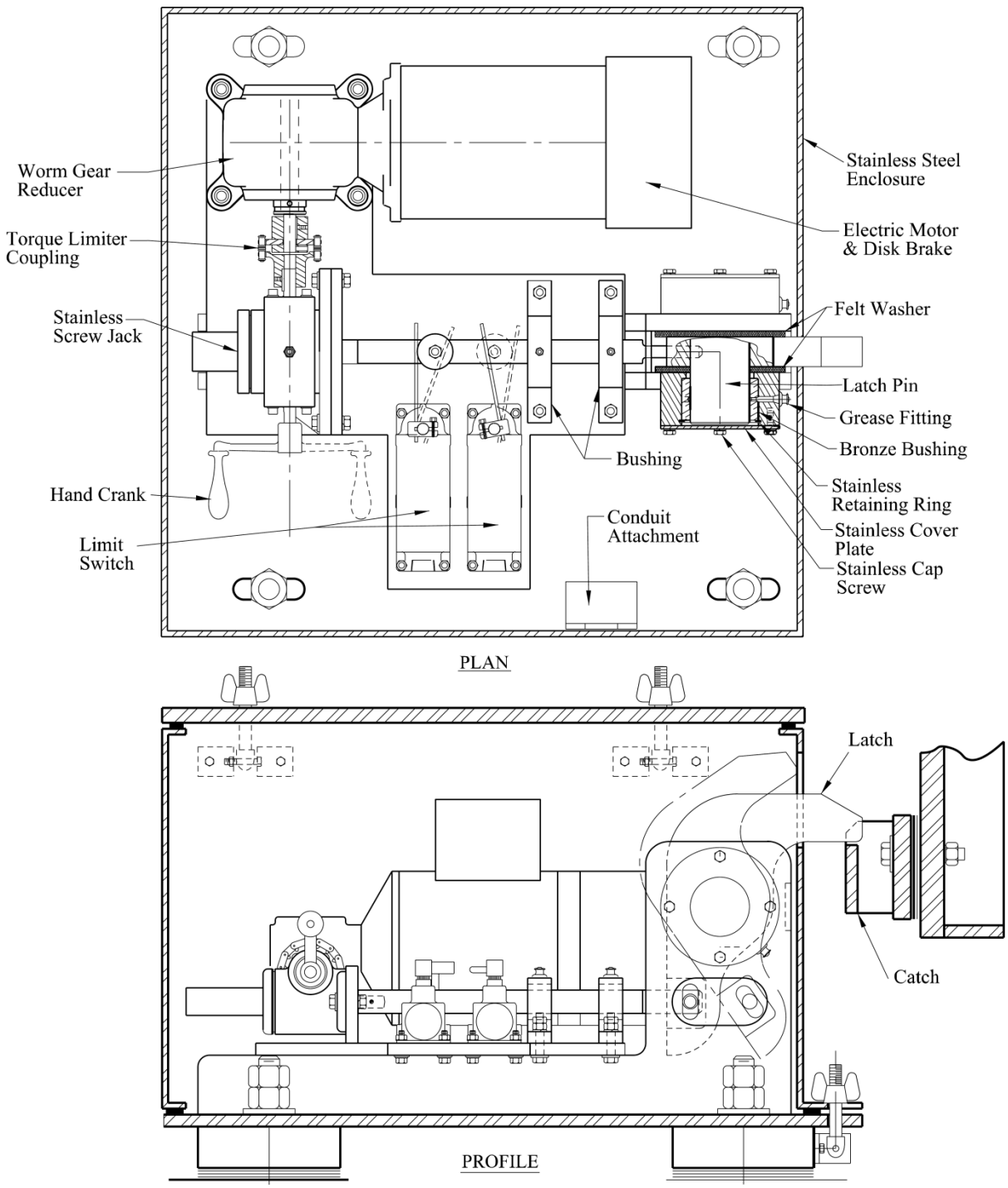

Figure 6.8.3.7.1-1—Example of the Latching Type of Span Lock

6.8.3.8—Span and Counterweight Guides

The following shall replace the 3rd sentence in *A6.8.3.8:*

Guides shall be of the rolling type (guide rollers) attached to the movable span engaging the guide flanges attached to the towers. The fixed and free span guide rollers shall coincide with the fixed and free span shoes.

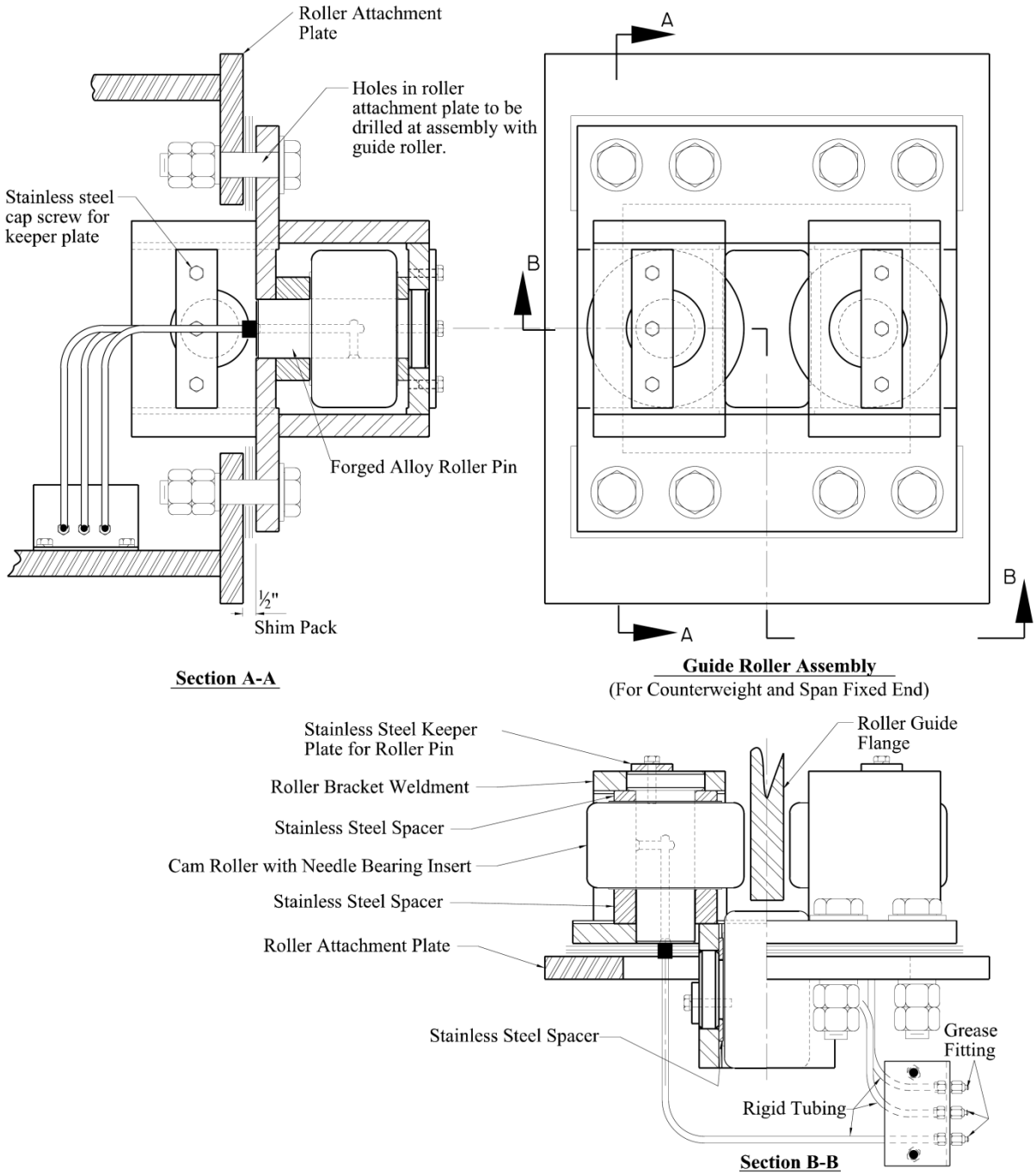

Figure 6.8.3.8-1—Example of a Vertical Lift Bridge Guide Roller Assembly for the Fixed End

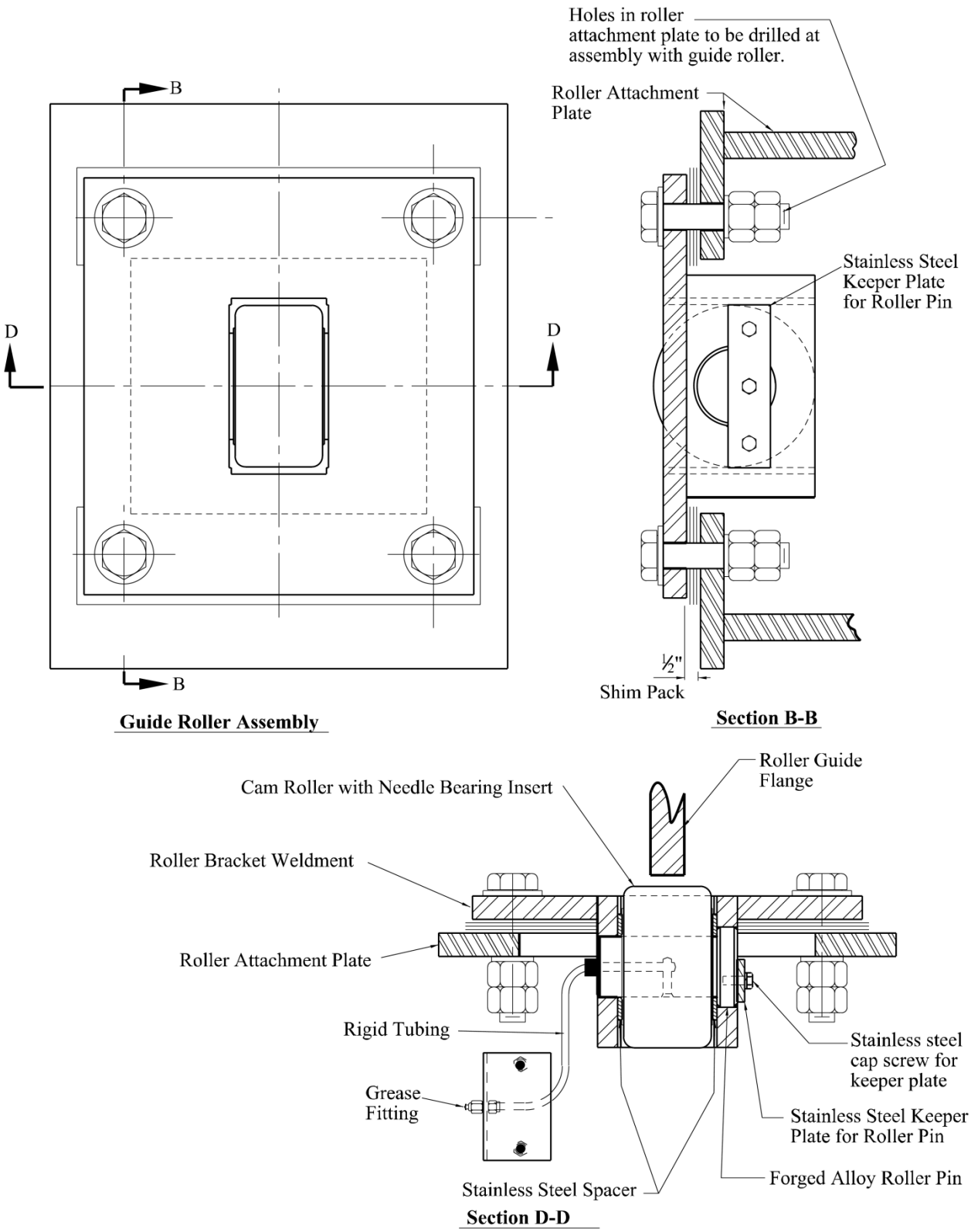

Figure 6.8.3.8-2—Example of a Vertical Lift Bridge Guide Roller Assembly For the Free End

6.9—EMERGENCY DRIVES

6.9.1—Engines for Driving Generators, Hydraulic Power Units, and Span Drive

The following shall supplement *A6.9.1*.

Gas or diesel engines shall not be used to back up span drive systems unless otherwise specified by the Bridge Design Engineer Administrator.

REFERENCES

AASHTO LRFD Bridge Construction Specifications, Latest Edition, American Association of State Highway and Transportation Officials, Washington D.C.

AASHTO LRFD Bridge Design Specifications, Latest Edition, American Association of State Highway and Transportation Officials, Washington D.C.

AASHTO LRFD Movable Highway Bridge Design Specifications, Latest Edition, American Association of State Highway and Transportation Officials, Washington D.C.

AASHTO Standard Specifications for Movable Highway Bridges, 5th Edition, MHB 5, American Association of State Highway and Transportation Officials, Washington D.C., 1988.

AISE Technical Report No.11, September 1997.

Gimpert, Dennis. *A new Standard in Gear Inspection*. Gear Solutions. Media Solutions Inc. www.gearsolutions.com. 2013.

Hovey, O. E. 1926. *Movable Bridges*. Vol. I, Superstructure. John Wiley and Sons Inc., New York.

Hovey, O. E. 1927. *Movable Bridges*. Vol. II, Machinery. John Wiley and Sons Inc., New York.

Louisiana Standard Specifications for Roads and Bridges, Latest Edition, State of Louisiana Department of Transportation and Development, Baton Rouge, LA.

Oberg, E. and F. D. Jones, et al. *Machinery's Handbook.* 28th Edition. Industrial Press Inc., New York, 2008.

Reclamation Safety and Health Standards, Appendix "D" - Wire Ropes.

Shigley, J. E. and C. R. Mischke. *Mechanical Engineering Design*. 5th Edition. McGraw-Hill Inc., New York, 1989.

Waddell, J. A. L. *Bridge Engineering*. Vol. I. John Wiley and Sons Inc., New York, 1916.

Waddell, J. A. L. *Bridge Engineering*. Vol. II. John Wiley and Sons Inc., New York, 1916.

WRTB. *Wire Rope Users Manual*. 3rd Edition. Wire Rope Technical Board, Alexandria, VA, 1983.

Young, Warren C. and Budynas, Richard G. *Roark's Formulas for Stress and Strain*. 7th Edition. McGraw-Hill Inc., New York, 2002.

Applicable Codes and Standards:

AGMA—American Gear Manufacturers Association
AISE—Association of Iron and Steel Engineers
ANSI—American National Standards Institute
ASTM—American Society for Testing and Materials
NEMA—National Electrical Manufacturers Association

APPENDIX—Vertical Lift Sheave Dimensions

AASHTO LRFD					
Vertical Lift Bridge Sheave Dimensions					
c = Wire Rope Diameter (in)	**D = Sheave**		**D_{rg} = Rope Groove Diameter (in)**		
	72c	**80c**			
	Use if span operated infrequently	Use if span operated frequently	Wire Rope Tolerance = x	D_{rg} = c + x (Fraction)	D_{rg} = c + x (Decimal)
3/4	4'-6"	5'-0"	1/32	25/32	0.78125
7/8	5'-3"	5'-10"	3/64	59/64	0.921875
1	6'-0"	6'-8"	3/64	1 3/64	1.046875
1 1/8	6'-9"	7'-6"	3/64	1 11/64	1.171875
1 1/4	7'-6"	8'-4"	1/16	1 5/16	1.3125
1 3/8	8'-3"	9'-2"	1/16	1 7/16	1.4375
1 1/2	9'-0"	10'-0"	1/16	1 9/16	1.5625
1 5/8	9'-9"	10'-10"	3/32	1 23/32	1.71875
1 3/4	10'-6"	11'-8"	3/32	1 27/32	1.84375
1 7/8	11'-3"	12'-6"	3/32	1 31/32	1.96875
2	12'-0"	13'-4"	3/32	2 3/32	2.09375
2 1/8	12'-9"	14'-2"	3/32	2 7/32	2.21875
2 1/4	13'-6"	15'-0"	3/32	2 11/32	2.34375
2 3/8	14'-3"	15'-10"	1/8	2 1/2	2.5
2 1/2	15'-0"	16'-8"	1/8	2 5/8	2.625

Minimum spacing between ropes = **c** + 1/4"

APPENDIX—Rope Selection (EIPS) (4 ropes per sheave)

2008 AASHTO LRFD (EIPS)											
c = Wire Rope Dia. (in)	**a** = Wire Rope Cross Section Area = $0.4\mathbf{c}^2$ (in^2)	**d** = Wire Strand Dia. (in)	$\mathbf{P_{ut}}$ = Min. Ult. Tensile Str. of 1 Rope (lbs)	**Vertical Lift Span Weight**							
		For 6x19 rope, d is approx. = c/16	Extra Improved Plow Steel (EIPS)	**4 Ropes/Sheave * 4 Sheaves = 16 Ropes**							
				$\mathbf{a_{Total}}$	$\mathbf{P_{DTL\ Tot}}$	$\mathbf{W_{S\ DTL}}$	$\mathbf{P_{Bend\ 72}}$	$\mathbf{P_{Bend\ 80}}$	$\mathbf{P_{Bend\ Tot}}$	$\mathbf{W_{S\ Bend\ 72}}$	$\mathbf{W_{S\ Bend\ 80}}$
3/4	0.2250	0.0469	52,400	3.60	104,800	**103,726**	63,438	57,094	186,311	**121,615**	**127,893**
7/8	0.3063	0.0547	70,800	4.90	141,600	**140,149**	86,345	77,711	251,733	**163,693**	**172,239**
1	0.4000	0.0625	92,000	6.40	184,000	**182,115**	112,778	101,500	327,111	**212,137**	**223,300**
1 1/8	0.5063	0.0703	115,600	8.10	231,200	**228,831**	142,734	128,461	411,022	**265,539**	**279,666**
1 1/4	0.6250	0.0781	142,200	10.00	284,400	**281,486**	176,215	158,594	505,600	**326,010**	**343,451**
1 3/8	0.7563	0.0859	171,000	12.10	342,000	**338,496**	213,220	191,898	608,000	**390,735**	**411,838**
1 1/2	0.9000	0.0938	202,000	14.40	404,000	**399,861**	253,750	228,375	718,222	**459,713**	**484,828**
1 5/8	1.0563	0.1016	236,000	16.90	472,000	**467,164**	297,804	268,023	839,111	**535,761**	**565,236**
1 3/4	1.2250	0.1094	274,000	19.60	548,000	**542,385**	345,382	310,844	974,222	**622,397**	**656,582**
1 7/8	1.4063	0.1172	312,000	22.50	624,000	**617,607**	396,484	356,836	1,109,333	**705,545**	**744,787**
2	1.6000	0.1250	352,000	25.60	704,000	**696,787**	451,111	406,000	1,251,556	**792,243**	**836,892**
2 1/8	1.8063	0.1328	394,000	28.90	788,000	**779,926**	509,262	458,336	1,400,889	**882,491**	**932,896**
2 1/4	2.0250	0.1406	440,000	32.40	880,000	**870,984**	570,938	513,844	1,564,444	**983,328**	**1,039,836**
2 3/8	2.2563	0.1484	488,000	36.10	976,000	**966,000**	636,137	572,523	1,735,111	**1,087,714**	**1,150,676**
2 1/2	2.5000	0.1563	538,000	40.00	1,076,000	**1,064,975**	704,861	634,375	1,912,889	**1,195,650**	**1,265,414**

E = Modulus of Elasticity = psi	**29,000,000**
v = Velocity of span = ft/sec	**1**
t = Braking Time = seconds	**3**

$\mathbf{P_{DTL\ Tot}}$ = Max. allowable Direct Tension Load (DTL) of the given rope system (all ropes on all sheaves) = 1/8 (12.5%) of the minimum ultimate tensile strength of the rope system. = lbs
$\mathbf{W_{S\ DTL}}$ = Max. weight of span for given rope system based on Direct Tension Load (DTL) = $\mathbf{P_{DTL\ Tot}}$ - $\mathbf{P_{B\ DTL}}$ = lbs
$\mathbf{P_{B\ DTL}}$ = Direct Tension Load in ropes due to braking = $((\mathbf{W_{S\ DTL}}/32.2)*\mathbf{v})/\mathbf{t}$ = lbs
$\mathbf{P_{Bend\ 72}}$ = Load due to bending on the rope system based on sheave diameter of 72**c** = $(0.7*\mathbf{E}*\mathbf{d}*\mathbf{a_{Total}})/(72*\mathbf{c})$= lbs
$\mathbf{P_{Bend\ 80}}$ = Load due to bending on the rope system based on sheave diameter of 80**c** = $(0.7*\mathbf{E}*\mathbf{d}*\mathbf{a_{Total}})/(80*\mathbf{c})$= lbs
$\mathbf{P_{Bend\ Tot}}$ = Max. allowable Total Load (DTL + bending) on the given rope system (all ropes on all sheaves) = 2/9 (22.2%) of the ultimate tensile strength of the rope system. = lbs
$\mathbf{W_{S\ Bend\ 72}}$ = Max. weight of span for given rope system based on Total Load (DTL + bending) and 72**c** dia. Sheave = $\mathbf{P_{bend\ Tot}}$ - ($\mathbf{P_{bend\ 72}}$ + $\mathbf{P_{brake\ Bend}}$) = lbs
$\mathbf{W_{S\ Bend\ 80}}$ = Max. weight of span for given rope system based on Total Load (DTL + bending) and 80**c** dia. Sheave = $\mathbf{P_{bend\ Tot}}$ - ($\mathbf{P_{bend\ 80}}$ + $\mathbf{P_{brake\ Bend}}$) = lbs
$\mathbf{P_{B\ Bend\ 72}}$ = Direct Tension Load in ropes due to braking using $\mathbf{W_{S\ Bend\ 72}}$ = $((\mathbf{W_{S\ Bend\ 72}}/32.2)*\mathbf{v})/\mathbf{t}$ = lbs
$\mathbf{P_{B\ Bend\ 80}}$ = Direct Tension Load in ropes due to braking using $\mathbf{W_{S\ Bend\ 80}}$ = $((\mathbf{W_{S\ Bend\ 80}}/32.2)*\mathbf{v})/\mathbf{t}$ = lbs

APPENDIX—Rope Selection (EIPS) (6 ropes per sheave)

2008 AASHTO LRFD (EIPS)											
c = Wire Rope Dia. (in)	**a** = Wire Rope Cross Section Area = $0.4c^2$ (in^2)	**d** = Wire Strand Dia. (in)	$\mathbf{P_{ut}}$ = Min. Ult. Tensile Str. of 1 Rope (lbs)	**Vertical Lift Span Weight**							
		For 6x19 rope, d is approx. = c/16	Extra Improved Plow Steel (EIPS)	**6 Ropes/Sheave * 4 Sheaves = 24 Ropes**							
				$\mathbf{a_{Total}}$	$\mathbf{P_{DTL\ Tot}}$	$\mathbf{W_{S\ DTL}}$	$\mathbf{P_{Bend\ 72}}$	$\mathbf{P_{Bend\ 80}}$	$\mathbf{P_{Bend\ Tot}}$	$\mathbf{W_{S\ Bend\ 72}}$	$\mathbf{W_{S\ Bend\ 80}}$
3/4	0.2250	0.0469	52,400	5.40	157,200	**155,589**	95,156	85,641	279,467	**182,422**	**191,840**
7/8	0.3063	0.0547	70,800	7.35	212,400	**210,224**	129,518	116,566	377,600	**245,540**	**258,359**
1	0.4000	0.0625	92,000	9.60	276,000	**273,172**	169,167	152,250	490,667	**318,206**	**334,949**
1 1/8	0.5063	0.0703	115,600	12.15	346,800	**343,247**	214,102	192,691	616,533	**398,308**	**419,499**
1 1/4	0.6250	0.0781	142,200	15.00	426,600	**422,229**	264,323	237,891	758,400	**489,015**	**515,176**
1 3/8	0.7563	0.0859	171,000	18.15	513,000	**507,744**	319,831	287,848	912,000	**586,102**	**617,757**
1 1/2	0.9000	0.0938	202,000	21.60	606,000	**599,791**	380,625	342,563	1,077,333	**689,570**	**727,242**
1 5/8	1.0563	0.1016	236,000	25.35	708,000	**700,746**	446,706	402,035	1,258,667	**803,642**	**847,855**
1 3/4	1.2250	0.1094	274,000	29.40	822,000	**813,578**	518,073	466,266	1,461,333	**933,596**	**984,872**
1 7/8	1.4063	0.1172	312,000	33.75	936,000	**926,410**	594,727	535,254	1,664,000	**1,058,318**	**1,117,181**
2	1.6000	0.1250	352,000	38.40	1,056,000	**1,045,180**	676,667	609,000	1,877,333	**1,188,365**	**1,255,338**
2 1/8	1.8063	0.1328	394,000	43.35	1,182,000	**1,169,889**	763,893	687,504	2,101,333	**1,323,737**	**1,399,343**
2 1/4	2.0250	0.1406	440,000	48.60	1,320,000	**1,306,475**	856,406	770,766	2,346,667	**1,474,991**	**1,559,755**
2 3/8	2.2563	0.1484	488,000	54.15	1,464,000	**1,449,000**	954,206	858,785	2,602,667	**1,631,571**	**1,726,014**
2 1/2	2.5000	0.1563	538,000	60.00	1,614,000	**1,597,463**	1,057,292	951,563	2,869,333	**1,793,476**	**1,898,122**

E = Modulus of Elasticity = psi	**29,000,000**
v = Velocity of span = ft/sec	**1**
t = Braking Time = seconds	**3**

$\mathbf{P_{DTL\ Tot}}$ = Max. allowable Direct Tension Load (DTL) of the given rope system (all ropes on all sheaves) = 1/8 (12.5%) of the minimum ultimate tensile strength of the rope system. = lbs
$\mathbf{W_{S\ DTL}}$ = Max. weight of span for given rope system based on Direct Tension Load (DTL) = $\mathbf{P_{DTL\ Tot}}$ - $\mathbf{P_{B\ DTL}}$ = lbs
$\mathbf{P_{B\ DTL}}$ = Direct Tension Load in ropes due to braking = (($\mathbf{W_{S\ DTL}}$/32.2)***v**)/**t** = lbs
$\mathbf{P_{Bend\ 72}}$ = Load due to bending on the rope system based on sheave diameter of 72**c** = (0.7*$\mathbf{E}$*$\mathbf{d}$*$\mathbf{a_{Total}}$)/(72*$\mathbf{c}$)= lbs
$\mathbf{P_{Bend\ 80}}$ = Load due to bending on the rope system based on sheave diameter of 80**c** = (0.7*$\mathbf{E}$*$\mathbf{d}$*$\mathbf{a_{Total}}$)/(80*$\mathbf{c}$)= lbs
$\mathbf{P_{Bend\ Tot}}$ = Max. allowable Total Load (DTL + bending) on the given rope system (all ropes on all sheaves) = 2/9 (22.2%) of the ultimate tensile strength of the rope system. = lbs
$\mathbf{W_{S\ Bend\ 72}}$ = Max. weight of span for given rope system based on Total Load (DTL + bending) and 72**c** dia. Sheave = $\mathbf{P_{bend\ Tot}}$ - ($\mathbf{P_{bend\ 72}}$ + $\mathbf{P_{brake\ Bend}}$) = lbs
$\mathbf{W_{S\ Bend\ 80}}$ = Max. weight of span for given rope system based on Total Load (DTL + bending) and 80**c** dia. Sheave = $\mathbf{P_{bend\ Tot}}$ - ($\mathbf{P_{bend\ 80}}$ + $\mathbf{P_{brake\ Bend}}$) = lbs
$\mathbf{P_{B\ Bend\ 72}}$ = Direct Tension Load in ropes due to braking using $\mathbf{W_{S\ Bend\ 72}}$ = (($\mathbf{W_{S\ Bend\ 72}}$/32.2)***v**)/**t** = lbs
$\mathbf{P_{B\ Bend\ 80}}$ = Direct Tension Load in ropes due to braking using $\mathbf{W_{S\ Bend\ 80}}$ = (($\mathbf{W_{S\ Bend\ 80}}$/32.2)***v**)/**t** = lbs

APPENDIX—Rope Selection (EIPS) (8 ropes per sheave)

2008 AASHTO LRFD (EIPS)											
c = Wire Rope Dia. (in)	**a** = Wire Rope Cross Section Area = $0.4c^2$ (in^2)	**d** = Wire Strand Dia. (in)	P_{ut} = Min. Ult. Tensile Str. of 1 Rope (lbs)	**Vertical Lift Span Weight**							
		For 6x19 rope, d is approx. = c/16	Extra Improved Plow Steel (EIPS)	**8 Ropes/Sheave * 4 Sheaves = 32 Ropes**							
				a_{Total}	$P_{DTL\ Tot}$	$W_{S\ DTL}$	$P_{Bend\ 72}$	$P_{Bend\ 80}$	$P_{Bend\ Tot}$	$W_{S\ Bend\ 72}$	$W_{S\ Bend\ 80}$
3/4	0.2250	0.0469	52,400	7.20	209,600	**207,452**	126,875	114,188	372,622	**243,229**	**255,787**
7/8	0.3063	0.0547	70,800	9.80	283,200	**280,298**	172,691	155,422	503,467	**327,387**	**344,479**
1	0.4000	0.0625	92,000	12.80	368,000	**364,230**	225,556	203,000	654,222	**424,275**	**446,599**
1 1/8	0.5063	0.0703	115,600	16.20	462,400	**457,662**	285,469	256,922	822,044	**531,078**	**559,332**
1 1/4	0.6250	0.0781	142,200	20.00	568,800	**562,972**	352,431	317,188	1,011,200	**652,020**	**686,902**
1 3/8	0.7563	0.0859	171,000	24.20	684,000	**676,992**	426,441	383,797	1,216,000	**781,469**	**823,676**
1 1/2	0.9000	0.0938	202,000	28.80	808,000	**799,721**	507,500	456,750	1,436,444	**919,427**	**969,657**
1 5/8	1.0563	0.1016	236,000	33.80	944,000	**934,328**	595,608	536,047	1,678,222	**1,071,522**	**1,130,473**
1 3/4	1.2250	0.1094	274,000	39.20	1,096,000	**1,084,770**	690,764	621,688	1,948,444	**1,244,794**	**1,313,163**
1 7/8	1.4063	0.1172	312,000	45.00	1,248,000	**1,235,213**	792,969	713,672	2,218,667	**1,411,090**	**1,489,575**
2	1.6000	0.1250	352,000	51.20	1,408,000	**1,393,574**	902,222	812,000	2,503,111	**1,584,486**	**1,673,784**
2 1/8	1.8063	0.1328	394,000	57.80	1,576,000	**1,559,852**	1,018,524	916,672	2,801,778	**1,764,982**	**1,865,791**
2 1/4	2.0250	0.0000	440,000	64.80	1,760,000	**1,741,967**	1,141,875	1,027,688	3,128,889	**1,966,655**	**2,079,673**
2 3/8	2.2563	0.1484	488,000	72.20	1,952,000	**1,932,000**	1,272,274	1,145,047	3,470,222	**2,175,428**	**2,301,352**
2 1/2	2.5000	0.1563	538,000	80.00	2,152,000	**2,129,951**	1,409,722	1,268,750	3,825,778	**2,391,301**	**2,530,829**

E = Modulus of Elasticity = psi	**29,000,000**
v = Velocity of span = ft/sec	**1**
t = Braking Time = seconds	**3**

$P_{DTL\ Tot}$ = Max. allowable Direct Tension Load (DTL) of the given rope system (all ropes on all sheaves) = 1/8 (12.5%) of the minimum ultimate tensile strength of the rope system. = lbs
$W_{S\ DTL}$ = Max. weight of span for given rope system based on Direct Tension Load (DTL) = $P_{DTL\ Tot} - P_{B\ DTL}$ = lbs
$P_{B\ DTL}$ = Direct Tension Load in ropes due to braking = $((W_{S\ DTL}/32.2)*v)/t$ = lbs
$P_{Bend\ 72}$ = Load due to bending on the rope system based on sheave diameter of 72**c** = $(0.7*E*d*a_{Total})/(72*c)$= lbs
$P_{Bend\ 80}$ = Load due to bending on the rope system based on sheave diameter of 80**c** = $(0.7*E*d*a_{Total})/(80*c)$= lbs
$P_{Bend\ Tot}$ = Max. allowable Total Load (DTL + bending) on the given rope system (all ropes on all sheaves) = 2/9 (22.2%) of the ultimate tensile strength of the rope system. = lbs
$W_{S\ Bend\ 72}$ = Max. weight of span for given rope system based on Total Load (DTL + bending) and 72**c** dia. Sheave = $P_{bend\ Tot} - (P_{bend\ 72} + P_{brake\ Bend})$ = lbs
$W_{S\ Bend\ 80}$ = Max. weight of span for given rope system based on Total Load (DTL + bending) and 80c dia. Sheave = $P_{bend\ Tot} - (P_{bend\ 80} + P_{brake\ Bend})$ = lbs
$P_{B\ Bend\ 72}$ = Direct Tension Load in ropes due to braking using $W_{S\ Bend\ 72} = ((W_{S\ Bend\ 72}/32.2)*v)/t$ = lbs
$P_{B\ Bend\ 80}$ = Direct Tension Load in ropes due to braking using $W_{S\ Bend\ 80} = ((W_{S\ Bend\ 80}/32.2)*v)/t$ = lbs

APPENDIX—Rope Selection (EIPS) (10 ropes per sheave)

2008 AASHTO LRFD (EIPS)											
c = Wire Rope Dia. (in)	**a** = Wire Rope Cross Section Area = $0.4c^2$ (in^2)	**d** = Wire Strand Dia. (in)	P_{ut} = Min. Ult. Tensile Str. of 1 Rope (lbs)	**Vertical Lift Span Weight**							
		For 6x19 rope, d is approx. = c/16	Extra Improved Plow Steel (EIPS)	**10 Ropes/Sheave * 4 Sheaves = 40 Ropes**							
				a_{Total}	$P_{DTL\ Tot}$	$W_{S\ DTL}$	$P_{Bend\ 72}$	$P_{Bend\ 80}$	$P_{Bend\ Tot}$	$W_{S\ Bend\ 72}$	$W_{S\ Bend\ 80}$
3/4	0.2250	0.0469	52,400	9.00	262,000	**259,316**	158,594	142,734	465,778	**304,037**	**319,734**
7/8	0.3063	0.0547	70,800	12.25	354,000	**350,373**	215,864	194,277	629,333	**409,233**	**430,598**
1	0.4000	0.0625	92,000	16.00	460,000	**455,287**	281,944	253,750	817,778	**530,343**	**558,249**
1 1/8	0.5063	0.0703	115,600	20.25	578,000	**572,078**	356,836	321,152	1,027,556	**663,847**	**699,165**
1 1/4	0.6250	0.0781	142,200	25.00	711,000	**703,715**	440,538	396,484	1,264,000	**815,025**	**858,627**
1 3/8	0.7563	0.0859	171,000	30.25	855,000	**846,240**	533,051	479,746	1,520,000	**976,837**	**1,029,596**
1 1/2	0.9000	0.0938	202,000	36.00	1,010,000	**999,652**	634,375	570,938	1,795,556	**1,149,283**	**1,212,071**
1 5/8	1.0563	0.1016	236,000	42.25	1,180,000	**1,167,910**	744,510	670,059	2,097,778	**1,339,403**	**1,413,091**
1 3/4	1.2250	0.1094	274,000	49.00	1,370,000	**1,355,963**	863,455	777,109	2,435,556	**1,555,993**	**1,641,454**
1 7/8	1.4063	0.1172	312,000	56.25	1,560,000	**1,544,016**	991,211	892,090	2,773,333	**1,763,863**	**1,861,968**
2	1.6000	0.1250	352,000	64.00	1,760,000	**1,741,967**	1,127,778	1,015,000	3,128,889	**1,980,608**	**2,092,230**
2 1/8	1.8063	0.1328	394,000	72.25	1,970,000	**1,949,816**	1,273,155	1,145,840	3,502,222	**2,206,228**	**2,332,239**
2 1/4	2.0250	0.1406	440,000	81.00	2,200,000	**2,177,459**	1,427,344	1,284,609	3,911,111	**2,458,319**	**2,599,591**
2 3/8	2.2563	0.1484	488,000	90.25	2,440,000	**2,415,000**	1,590,343	1,431,309	4,337,778	**2,719,285**	**2,876,690**
2 1/2	2.5000	0.1563	538,000	100.00	2,690,000	**2,662,439**	1,762,153	1,585,938	4,782,222	**2,989,126**	**3,163,536**

E = Modulus of Elasticity = psi	**29,000,000**
v = Velocity of span = ft/sec	**1**
t = Braking Time = seconds	**3**

$P_{DTL\ Tot}$ = Max. allowable Direct Tension Load (DTL) of the given rope system (all ropes on all sheaves) = 1/8 (12.5%) of the minimum ultimate tensile strength of the rope system. = lbs
$W_{S\ DTL}$ = Max. weight of span for given rope system based on Direct Tension Load (DTL) = $P_{DTL\ Tot} - P_{B\ DTL}$ = lbs
$P_{B\ DTL}$ = Direct Tension Load in ropes due to braking = $((W_{S\ DTL}/32.2)*v)/t$ = lbs
$P_{Bend\ 72}$ = Load due to bending on the rope system based on sheave diameter of 72**c** = $(0.7*E*d*a_{Total})/(72*c)$= lbs
$P_{Bend\ 80}$ = Load due to bending on the rope system based on sheave diameter of 80**c** = $(0.7*E*d*a_{Total})/(80*c)$= lbs
$P_{Bend\ Tot}$ = Max. allowable Total Load (DTL + bending) on the given rope system (all ropes on all sheaves) = 2/9 (22.2%) of the ultimate tensile strength of the rope system. = lbs
$W_{S\ Bend\ 72}$ = Max. weight of span for given rope system based on Total Load (DTL + bending) and 72**c** dia. Sheave = $P_{bend\ Tot} - (P_{bend\ 72} + P_{brake\ Bend})$ = lbs
$W_{S\ Bend\ 80}$ = Max. weight of span for given rope system based on Total Load (DTL + bending) and 80**c** dia. Sheave = $P_{bend\ Tot} - (P_{bend\ 80} + P_{brake\ Bend})$ = lbs
$P_{B\ Bend\ 72}$ = Direct Tension Load in ropes due to braking using $W_{S\ Bend\ 72} = ((W_{S\ Bend\ 72}/32.2)*v)/t$ = lbs
$P_{B\ Bend\ 80}$ = Direct Tension Load in ropes due to braking using $W_{S\ Bend\ 80} = ((W_{S\ Bend\ 80}/32.2)*v)/t$ = lbs

APPENDIX—Rope Selection (EIPS) (12 ropes per sheave)

2008 AASHTO LRFD (EIPS)											
c = Wire Rope Dia. (in)	**a** = Wire Rope Cross Section Area = $0.4c^2$ (in^2)	**d** = Wire Strand Dia. (in)	P_{ut} = Min. Ult. Tensile Str. of 1 Rope (lbs)	**Vertical Lift Span Weight**							
		For 6x19 rope, d is approx. = c/16	Extra Improved Plow Steel (EIPS)	**12 Ropes/Sheave * 4 Sheaves = 48 Ropes**							
				a_{Total}	$P_{DTL\ Tot}$	$W_{S\ DTL}$	$P_{Bend\ 72}$	$P_{Bend\ 80}$	$P_{Bend\ Tot}$	$W_{S\ Bend\ 72}$	$W_{S\ Bend\ 80}$
3/4	0.2250	0.0469	52,400	10.80	314,400	**311,179**	190,313	171,281	558,933	**364,844**	**383,680**
7/8	0.3063	0.0547	70,800	14.70	424,800	**420,448**	259,036	233,133	755,200	**491,080**	**516,718**
1	0.4000	0.0625	92,000	19.20	552,000	**546,344**	338,333	304,500	981,333	**636,412**	**669,899**
1 1/8	0.5063	0.0703	115,600	24.30	693,600	**686,493**	428,203	385,383	1,233,067	**796,617**	**838,999**
1 1/4	0.6250	0.0781	142,200	30.00	853,200	**844,458**	528,646	475,781	1,516,800	**978,030**	**1,030,353**
1 3/8	0.7563	0.0859	171,000	36.30	1,026,000	**1,015,488**	639,661	575,695	1,824,000	**1,172,204**	**1,235,515**
1 1/2	0.9000	0.0938	202,000	43.20	1,212,000	**1,199,582**	761,250	685,125	2,154,667	**1,379,140**	**1,454,485**
1 5/8	1.0563	0.1016	236,000	50.70	1,416,000	**1,401,492**	893,411	804,070	2,517,333	**1,607,283**	**1,695,709**
1 3/4	1.2250	0.1094	274,000	58.80	1,644,000	**1,627,156**	1,036,146	932,531	2,922,667	**1,867,192**	**1,969,745**
1 7/8	1.4063	0.1172	312,000	67.50	1,872,000	**1,852,820**	1,189,453	1,070,508	3,328,000	**2,116,636**	**2,234,362**
2	1.6000	0.1250	352,000	76.80	2,112,000	**2,090,361**	1,353,333	1,218,000	3,754,667	**2,376,730**	**2,510,676**
2 1/8	1.8063	0.1328	394,000	86.70	2,364,000	**2,339,779**	1,527,786	1,375,008	4,202,667	**2,647,474**	**2,798,687**
2 1/4	2.0250	0.1406	440,000	97.20	2,640,000	**2,612,951**	1,712,813	1,541,531	4,693,333	**2,949,983**	**3,119,509**
2 3/8	2.2563	0.1484	488,000	108.30	2,928,000	**2,898,000**	1,908,411	1,717,570	5,205,333	**3,263,142**	**3,452,028**
2 1/2	2.5000	0.1563	538,000	120.00	3,228,000	**3,194,926**	2,114,583	1,903,125	5,738,667	**3,586,951**	**3,796,243**

E = Modulus of Elasticity = psi	**29,000,000**
v = Velocity of span = ft/sec	**1**
t = Braking Time = seconds	**3**

$P_{DTL\ Tot}$ = Max. allowable Direct Tension Load (DTL) of the given rope system (all ropes on all sheaves) = 1/8 (12.5%) of the minimum ultimate tensile strength of the rope system. = lbs
$W_{S\ DTL}$ = Max. weight of span for given rope system based on Direct Tension Load (DTL) = $P_{DTL\ Tot}$ - $P_{B\ DTL}$ = lbs
$P_{B\ DTL}$ = Direct Tension Load in ropes due to braking = (($W_{S\ DTL}$/32.2)***v**)/**t** = lbs
$P_{Bend\ 72}$ = Load due to bending on the rope system based on sheave diameter of 72**c** = (0.7*E*d*a_{Total})/(72*c)= lbs
$P_{Bend\ 80}$ = Load due to bending on the rope system based on sheave diameter of 80**c** = (0.7*E*d*a_{Total})/(80*c)= lbs
$P_{Bend\ Tot}$ = Max. allowable Total Load (DTL + bending) on the given rope system (all ropes on all sheaves) = 2/9 (22.2%) of the ultimate tensile strength of the rope system. = lbs
$W_{S\ Bend\ 72}$ = Max. weight of span for given rope system based on Total Load (DTL + bending) and 72**c** dia. Sheave = $P_{bend\ Tot}$ - ($P_{bend\ 72}$ + $P_{brake\ Bend}$) = lbs
$W_{S\ Bend\ 80}$ = Max. weight of span for given rope system based on Total Load (DTL + bending) and 80**c** dia. Sheave = $P_{bend\ Tot}$ - ($P_{bend\ 80}$ + $P_{brake\ Bend}$) = lbs
$P_{B\ Bend\ 72}$ = Direct Tension Load in ropes due to braking using $W_{S\ Bend\ 72}$ = (($W_{S\ Bend\ 72}$/32.2)***v**)/**t** = lbs
$P_{B\ Bend\ 80}$ = Direct Tension Load in ropes due to braking using $W_{S\ Bend\ 80}$ = (($W_{S\ Bend\ 80}$/32.2)***v**)/**t** = lbs

APPENDIX—Rope Selection (EIPS Galvanized) (4 ropes per sheave)

2008 AASHTO LRFD (EIPS- Galvanized)											
c = Wire Rope Dia.(in)	**a** = Wire Rope Cross Section Area = $0.4c^2$ (in^2)	**d** = Wire Strand Dia. (in)	P_{ut} = Min. Ult. Tensile Str. of 1 Rope (lbs)	**Vertical Lift Span Weight**							
		For 6x19 rope, d is approx. = c/16	(EIPS) Galvanized	**4 Ropes/Sheave * 4 Sheaves = 16 Ropes**							
				a_{Total}	$P_{DTL\ Tot}$	$W_{S\ DTL}$	$P_{Bend\ 72}$	$P_{Bend\ 80}$	$P_{Bend\ Tot}$	$W_{S\ Bend\ 72}$	$W_{S\ Bend\ 80}$
3/4	0.2250	0.0469	47,200	3.60	94,400	**93,433**	63,438	57,094	167,822	**103,315**	**109,594**
7/8	0.3063	0.0547	63,700	4.90	127,400	**126,095**	86,345	77,711	226,489	**138,708**	**147,254**
1	0.4000	0.0625	82,800	6.40	165,600	**163,903**	112,778	101,500	294,400	**179,761**	**190,924**
1 1/8	0.5063	0.0703	104,200	8.10	208,400	**206,265**	142,734	128,461	370,489	**225,421**	**239,548**
1 1/4	0.6250	0.0781	128,000	10.00	256,000	**253,377**	176,215	158,594	455,111	**276,038**	**293,479**
1 3/8	0.7563	0.0859	153,900	12.10	307,800	**304,646**	213,220	191,898	547,200	**330,558**	**351,661**
1 1/2	0.9000	0.0938	181,800	14.40	363,600	**359,875**	253,750	228,375	646,400	**388,627**	**413,742**
1 5/8	1.0563	0.1016	212,400	16.90	424,800	**420,448**	297,804	268,023	755,200	**452,710**	**482,185**
1 3/4	1.2250	0.1094	244,800	19.60	489,600	**484,584**	345,382	310,844	870,400	**519,639**	**553,823**
1 7/8	1.4063	0.1172	279,000	22.50	558,000	**552,283**	396,484	356,836	992,000	**589,414**	**628,656**
2	1.6000	0.1250	316,800	25.60	633,600	**627,108**	451,111	406,000	1,126,400	**668,370**	**713,019**
2 1/8	1.8063	0.1328	354,600	28.90	709,200	**701,934**	509,262	458,336	1,260,800	**743,838**	**794,242**
2 1/4	2.0250	0.1406	396,000	32.40	792,000	**783,885**	570,938	513,844	1,408,000	**828,486**	**884,995**
2 3/8	2.2563	0.1484	439,000	36.10	878,000	**869,004**	636,137	572,523	1,560,889	**915,277**	**978,239**
2 1/2	2.5000	0.1563	484,200	40.00	968,400	**958,478**	704,861	634,375	1,721,600	**1,006,321**	**1,076,085**

E = Modulus of Elasticity = psi	**29,000,000**
v = Velocity of span = ft/sec	**1**
t = Braking Time = seconds	**3**

$P_{DTL\ Tot}$ = Max. allowable Direct Tension Load (DTL) of the given rope system (all ropes on all sheaves) = 1/8 (12.5%) of the minimum ultimate tensile strength of the rope system. = lbs
$W_{S\ DTL}$ = Max. weight of span for given rope system based on Direct Tension Load (DTL) = $P_{DTL\ Tot} - P_{B\ DTL}$ = lbs
$P_{B\ DTL}$ = Direct Tension Load in ropes due to braking = $((W_{S\ DTL}/32.2)*v)/t$ = lbs
$P_{Bend\ 72}$ = Load due to bending on the rope system based on sheave diameter of 72**c** = $(0.7*E*d*a_{Total})/(72*c)$= lbs
$P_{Bend\ 80}$ = Load due to bending on the rope system based on sheave diameter of 80**c** = $(0.7*E*d*a_{Total})/(80*c)$= lbs
$P_{Bend\ Tot}$ = Max. allowable Total Load (DTL + bending) on the given rope system (all ropes on all sheaves) = 2/9 (22.2%) of the ultimate tensile strength of the rope system. = lbs
$W_{S\ Bend\ 72}$ = Max. weight of span for given rope system based on Total Load (DTL + bending) and 72**c** dia. Sheave = $P_{bend\ Tot} - (P_{bend\ 72} + P_{brake\ Bend})$ = lbs
$W_{S\ Bend\ 80}$ = Max. weight of span for given rope system based on Total Load (DTL + bending) and 80**c** dia. Sheave = $P_{bend\ Tot} - (P_{bend\ 80} + P_{brake\ Bend})$ = lbs
$P_{B\ Bend\ 72}$ = Direct Tension Load in ropes due to braking using $W_{S\ Bend\ 72} = ((W_{S\ Bend\ 72}/32.2)*v)/t$ = lbs
$P_{B\ Bend\ 80}$ = Direct Tension Load in ropes due to braking using $W_{S\ Bend\ 80} = ((W_{S\ Bend\ 80}/32.2)*v)/t$ = lbs

APPENDIX—Rope Selection (EIPS Galvanized) (6 ropes per sheave)

2008 AASHTO LRFD (EIPS- Galvanized)											
c = Wire Rope Dia. (in)	**a** = Wire Rope Cross Section Area = $0.4c^2$ (in^2)	**d** = Wire Strand Dia. (in)	P_{ut} = Min. Ult. Tensile Str. of 1 Rope (lbs)	**Vertical Lift Span Weight**							
		For 6x19 rope, d is approx. = c/16	(EIPS) Galvanized	**6 Ropes/Sheave * 4 Sheaves = 24 Ropes**							
				a_{Total}	$P_{DTL\ Tot}$	$W_{S\ DTL}$	$P_{Bend\ 72}$	$P_{Bend\ 80}$	$P_{Bend\ Tot}$	$W_{S\ Bend\ 72}$	$W_{S\ Bend\ 80}$
3/4	0.2250	0.0469	47,200	5.40	141,600	**140,149**	95,156	85,641	251,733	**154,973**	**164,391**
7/8	0.3063	0.0547	63,700	7.35	191,100	**189,142**	129,518	116,566	339,733	**208,061**	**220,880**
1	0.4000	0.0625	82,800	9.60	248,400	**245,855**	169,167	152,250	441,600	**269,642**	**286,385**
1 1/8	0.5063	0.0703	104,200	12.15	312,600	**309,397**	214,102	192,691	555,733	**338,131**	**359,322**
1 1/4	0.6250	0.0781	128,000	15.00	384,000	**380,066**	264,323	237,891	682,667	**414,057**	**440,219**
1 3/8	0.7563	0.0859	153,900	18.15	461,700	**456,969**	319,831	287,848	820,800	**495,836**	**527,492**
1 1/2	0.9000	0.0938	181,800	21.60	545,400	**539,812**	380,625	342,563	969,600	**582,940**	**620,613**
1 5/8	1.0563	0.1016	212,400	25.35	637,200	**630,671**	446,706	402,035	1,132,800	**679,065**	**723,277**
1 3/4	1.2250	0.1094	244,800	29.40	734,400	**726,875**	518,073	466,266	1,305,600	**779,458**	**830,735**
1 7/8	1.4063	0.1172	279,000	33.75	837,000	**828,424**	594,727	535,254	1,488,000	**884,121**	**942,984**
2	1.6000	0.1250	316,800	38.40	950,400	**940,662**	676,667	609,000	1,689,600	**1,002,555**	**1,069,528**
2 1/8	1.8063	0.1328	354,600	43.35	1,063,800	**1,052,900**	763,893	687,504	1,891,200	**1,115,756**	**1,191,363**
2 1/4	2.0250	0.1406	396,000	48.60	1,188,000	**1,175,828**	856,406	770,766	2,112,000	**1,242,729**	**1,327,492**
2 3/8	2.2563	0.1484	439,000	54.15	1,317,000	**1,303,506**	954,206	858,785	2,341,333	**1,372,915**	**1,467,358**
2 1/2	2.5000	0.1563	484,200	60.00	1,452,600	**1,437,717**	1,057,292	951,563	2,582,400	**1,509,482**	**1,614,128**

E = Modulus of Elasticity = psi	**29,000,000**
v = Velocity of span = ft/sec	**1**
t = Braking Time = seconds	**3**

$P_{DTL\ Tot}$ = Max. allowable Direct Tension Load (DTL) of the given rope system (all ropes on all sheaves) = 1/8 (12.5%) of the minimum ultimate tensile strength of the rope system. = lbs
$W_{S\ DTL}$ = Max. weight of span for given rope system based on Direct Tension Load (DTL) = $P_{DTL\ Tot}$ - $P_{B\ DTL}$ = lbs
$P_{B\ DTL}$ = Direct Tension Load in ropes due to braking = (($W_{S\ DTL}$/32.2)*v)/t = lbs
$P_{Bend\ 72}$ = Load due to bending on the rope system based on sheave diameter of 72c = (0.7*E*d*a_{Total})/(72*c)= lbs
$P_{Bend\ 80}$ = Load due to bending on the rope system based on sheave diameter of 80c = (0.7*E*d*a_{Total})/(80*c)= lbs
$P_{Bend\ Tot}$ = Max. allowable Total Load (DTL + bending) on the given rope system (all ropes on all sheaves) = 2/9 (22.2%) of the ultimate tensile strength of the rope system. = lbs
$W_{S\ Bend\ 72}$ = Max. weight of span for given rope system based on Total Load (DTL + bending) and 72c dia. Sheave = $P_{bend\ Tot}$ - ($P_{bend\ 72}$ + $P_{brake\ Bend}$) = lbs
$W_{S\ Bend\ 80}$ = Max. weight of span for given rope system based on Total Load (DTL + bending) and 80c dia. Sheave = $P_{bend\ Tot}$ - ($P_{bend\ 80}$ + $P_{brake\ Bend}$) = lbs
$P_{B\ Bend\ 72}$ = Direct Tension Load in ropes due to braking using $W_{S\ Bend\ 72}$ = (($W_{S\ Bend\ 72}$/32.2)*v)/t = lbs
$P_{B\ Bend\ 80}$ = Direct Tension Load in ropes due to braking using $W_{S\ Bend\ 80}$ = (($W_{S\ Bend\ 80}$/32.2)*v)/t = lbs

APPENDIX—Rope Selection (EIPS Galvanized) (8 ropes per sheave)

2008 AASHTO LRFD (EIPS- Galvanized)											
c = Wire Rope Dia. (in)	**a** = Wire Rope Cross Section Area = $0.4c^2$ (in^2)	**d** = Wire Strand Dia. (in)	P_{ut} = Min. Ult. Tensile Str. of 1 Rope (lbs)	**Vertical Lift Span Weight**							
		For 6x19 rope, d is approx. = c/16	(EIPS) Galvanized	**8 Ropes/Sheave * 4 Sheaves = 32 Ropes**							
				a_{Total}	$P_{DTL\ Tot}$	$W_{S\ DTL}$	$P_{Bend\ 72}$	$P_{Bend\ 80}$	$P_{Bend\ Tot}$	$W_{S\ Bend\ 72}$	$W_{S\ Bend\ 80}$
3/4	0.2250	0.0469	47,200	7.20	188,800	**186,866**	126,875	114,188	335,644	**206,630**	**219,188**
7/8	0.3063	0.0547	63,700	9.80	254,800	**252,189**	172,691	155,422	452,978	**277,415**	**294,507**
1	0.4000	0.0625	82,800	12.80	331,200	**327,807**	225,556	203,000	588,800	**359,523**	**381,847**
1 1/8	0.5063	0.0703	104,200	16.20	416,800	**412,530**	285,469	256,922	740,978	**450,842**	**479,096**
1 1/4	0.6250	0.0781	128,000	20.00	512,000	**506,754**	352,431	317,188	910,222	**552,077**	**586,959**
1 3/8	0.7563	0.0859	153,900	24.20	615,600	**609,293**	426,441	383,797	1,094,400	**661,115**	**703,322**
1 1/2	0.9000	0.0938	181,800	28.80	727,200	**719,749**	507,500	456,750	1,292,800	**777,254**	**827,484**
1 5/8	1.0563	0.1016	212,400	33.80	849,600	**840,895**	595,608	536,047	1,510,400	**905,419**	**964,370**
1 3/4	1.2250	0.1094	244,800	39.20	979,200	**969,167**	690,764	621,688	1,740,800	**1,039,278**	**1,107,646**
1 7/8	1.4063	0.1172	279,000	45.00	1,116,000	**1,104,566**	792,969	713,672	1,984,000	**1,178,828**	**1,257,312**
2	1.6000	0.1250	316,800	51.20	1,267,200	**1,254,216**	902,222	812,000	2,252,800	**1,336,740**	**1,426,038**
2 1/8	1.8063	0.1328	354,600	57.80	1,418,400	**1,403,867**	1,018,524	916,672	2,521,600	**1,487,675**	**1,588,484**
2 1/4	2.0250	0.1406	396,000	64.80	1,584,000	**1,567,770**	1,141,875	1,027,688	2,816,000	**1,656,972**	**1,769,990**
2 3/8	2.2563	0.1484	439,000	72.20	1,756,000	**1,738,008**	1,272,274	1,145,047	3,121,778	**1,830,554**	**1,956,478**
2 1/2	2.5000	0.1563	484,200	80.00	1,936,800	**1,916,956**	1,409,722	1,268,750	3,443,200	**2,012,643**	**2,152,171**

E = Modulus of Elasticity = psi	**29,000,000**
v = Velocity of span = ft/sec	**1**
t = Braking Time = seconds	**3**

$P_{DTL\ Tot}$ = Max. allowable Direct Tension Load (DTL) of the given rope system (all ropes on all sheaves) = 1/8 (12.5%) of the minimum ultimate tensile strength of the rope system. = lbs
$W_{S\ DTL}$ = Max. weight of span for given rope system based on Direct Tension Load (DTL) = $P_{DTL\ Tot}$ - $P_{B\ DTL}$ = lbs
$P_{B\ DTL}$ = Direct Tension Load in ropes due to braking = $((W_{S\ DTL}/32.2)*v)/t$ = lbs
$P_{Bend\ 72}$ = Load due to bending on the rope system based on sheave diameter of 72**c** = $(0.7*E*d*a_{Total})/(72*c)$= lbs
$P_{Bend\ 80}$ = Load due to bending on the rope system based on sheave diameter of 80**c** = $(0.7*E*d*a_{Total})/(80*c)$= lbs
$P_{Bend\ Tot}$ = Max. allowable Total Load (DTL + bending) on the given rope system (all ropes on all sheaves) = 2/9 (22.2%) of the ultimate tensile strength of the rope system. = lbs
$W_{S\ Bend\ 72}$ = Max. weight of span for given rope system based on Total Load (DTL + bending) and 72**c** dia. Sheave = $P_{bend\ Tot}$ - ($P_{bend\ 72}$ + $P_{brake\ Bend}$) = lbs
$W_{S\ Bend\ 80}$ = Max. weight of span for given rope system based on Total Load (DTL + bending) and 80**c** dia. Sheave = $P_{bend\ Tot}$ - ($P_{bend\ 80}$ + $P_{brake\ Bend}$) = lbs
$P_{B\ Bend\ 72}$ = Direct Tension Load in ropes due to braking using $W_{S\ Bend\ 72}$ = $((W_{S\ Bend\ 72}/32.2)*v)/t$ = lbs
$P_{B\ Bend\ 80}$ = Direct Tension Load in ropes due to braking using $W_{S\ Bend\ 80}$ = $((W_{S\ Bend\ 80}/32.2)*v)/t$ = lbs

APPENDIX—Rope Selection (EIPS Galvanized) (10 ropes per sheave)

2008 AASHTO LRFD (EIPS- Galvanized)											
c = Wire Rope Dia.(in)	**a** = Wire Rope Cross Section Area = $0.4c^2$ (in^2)	**d** = Wire Strand Dia. (in)	P_{ut} = Min. Ult. Tensile Str. of 1 Rope (lbs)	**Vertical Lift Span Weight**							
		For 6x19 rope, d is approx. = c/16	(EIPS) Galvanized	**10 Ropes/Sheave * 4 Sheaves = 40 Ropes**							
				a_{Total}	$P_{DTL\ Tot}$	$W_{S\ DTL}$	$P_{Bend\ 72}$	$P_{Bend\ 80}$	$P_{Bend\ Tot}$	$W_{S\ Bend\ 72}$	$W_{S\ Bend\ 80}$
3/4	0.2250	0.0469	47,200	9.00	236,000	**233,582**	158,594	142,734	419,556	**258,288**	**273,985**
7/8	0.3063	0.0547	63,700	12.25	318,500	**315,237**	215,864	194,277	566,222	**346,769**	**368,134**
1	0.4000	0.0625	82,800	16.00	414,000	**409,758**	281,944	253,750	736,000	**449,403**	**477,309**
1 1/8	0.5063	0.0703	104,200	20.25	521,000	**515,662**	356,836	321,152	926,222	**563,552**	**598,870**
1 1/4	0.6250	0.0781	128,000	25.00	640,000	**633,443**	440,538	396,484	1,137,778	**690,096**	**733,698**
1 3/8	0.7563	0.0859	153,900	30.25	769,500	**761,616**	533,051	479,746	1,368,000	**826,394**	**879,153**
1 1/2	0.9000	0.0938	181,800	36.00	909,000	**899,686**	634,375	570,938	1,616,000	**971,567**	**1,034,355**
1 5/8	1.0563	0.1016	212,400	42.25	1,062,000	**1,051,119**	744,510	670,059	1,888,000	**1,131,774**	**1,205,462**
1 3/4	1.2250	0.1094	244,800	49.00	1,224,000	**1,211,459**	863,455	777,109	2,176,000	**1,299,097**	**1,384,558**
1 7/8	1.4063	0.1172	279,000	56.25	1,395,000	**1,380,707**	991,211	892,090	2,480,000	**1,473,535**	**1,571,641**
2	1.6000	0.1250	316,800	64.00	1,584,000	**1,567,770**	1,127,778	1,015,000	2,816,000	**1,670,925**	**1,782,547**
2 1/8	1.8063	0.1328	354,600	72.25	1,773,000	**1,754,834**	1,273,155	1,145,840	3,152,000	**1,859,594**	**1,985,605**
2 1/4	2.0250	0.1406	396,000	81.00	1,980,000	**1,959,713**	1,427,344	1,284,609	3,520,000	**2,071,215**	**2,212,487**
2 3/8	2.2563	0.1484	439,000	90.25	2,195,000	**2,172,510**	1,590,343	1,431,309	3,902,222	**2,288,192**	**2,445,597**
2 1/2	2.5000	0.1563	484,200	100.00	2,421,000	**2,396,195**	1,762,153	1,585,938	4,304,000	**2,515,804**	**2,690,213**

E = Modulus of Elasticity = psi	**29,000,000**
v = Velocity of span = ft/sec	**1**
t = Braking Time = seconds	**3**

$P_{DTL\ Tot}$ = Max. allowable Direct Tension Load (DTL) of the given rope system (all ropes on all sheaves) = 1/8 (12.5%) of the minimum ultimate tensile strength of the rope system. = lbs
$W_{S\ DTL}$ = Max. weight of span for given rope system based on Direct Tension Load (DTL) = $P_{DTL\ Tot}$ - $P_{B\ DTL}$ = lbs
$P_{B\ DTL}$ = Direct Tension Load in ropes due to braking = (($W_{S\ DTL}$/32.2)*v)/t = lbs
$P_{Bend\ 72}$ = Load due to bending on the rope system based on sheave diameter of 72c = (0.7*E*d*a_{Total})/(72*c)= lbs
$P_{Bend\ 80}$ = Load due to bending on the rope system based on sheave diameter of 80c = (0.7*E*d*a_{Total})/(80*c)= lbs
$P_{Bend\ Tot}$ = Max. allowable Total Load (DTL + bending) on the given rope system (all ropes on all sheaves) = 2/9 (22.2%) of the ultimate tensile strength of the rope system. = lbs
$W_{S\ Bend\ 72}$ = Max. weight of span for given rope system based on Total Load (DTL + bending) and 72c dia. Sheave = $P_{bend\ Tot}$ - ($P_{bend\ 72}$ + $P_{brake\ Bend}$) = lbs
$W_{S\ Bend\ 80}$ = Max. weight of span for given rope system based on Total Load (DTL + bending) and 80c dia. Sheave = $P_{bend\ Tot}$ - ($P_{bend\ 80}$ + $P_{brake\ Bend}$) = lbs
$P_{B\ Bend\ 72}$ = Direct Tension Load in ropes due to braking using $W_{S\ Bend\ 72}$ = (($W_{S\ Bend\ 72}$/32.2)*v)/t = lbs
$P_{B\ Bend\ 80}$ = Direct Tension Load in ropes due to braking using $W_{S\ Bend\ 80}$ = (($W_{S\ Bend\ 80}$/32.2)*v)/t = lbs

APPENDIX—Rope Selection (EIPS Galvanized) (12 ropes per sheave)

2008 AASHTO LRFD (EIPS- Galvanized)											
c = Wire Rope Dia. (in)	**a** = Wire Rope Cross Section Area = $0.4c^2$ (in^2)	**d** = Wire Strand Dia. (in)	P_{ut} = Min. Ult. Tensile Str. of 1 Rope (lbs)	**Vertical Lift Span Weight**							
		For 6x19 rope, d is approx. = c/16	(EIPS) Galvanized	**12 Ropes/Sheave * 4 Sheaves = 48 Ropes**							
				a_{Total}	$P_{DTL\ Tot}$	$W_{S\ DTL}$	$P_{Bend\ 72}$	$P_{Bend\ 80}$	$P_{Bend\ Tot}$	$W_{S\ Bend\ 72}$	$W_{S\ Bend\ 80}$
3/4	0.2250	0.0469	47,200	10.80	283,200	**280,298**	190,313	171,281	503,467	**309,946**	**328,782**
7/8	0.3063	0.0547	63,700	14.70	382,200	**378,284**	259,036	233,133	679,467	**416,123**	**441,761**
1	0.4000	0.0625	82,800	19.20	496,800	**491,710**	338,333	304,500	883,200	**539,284**	**572,771**
1 1/8	0.5063	0.0703	104,200	24.30	625,200	**618,794**	428,203	385,383	1,111,467	**676,263**	**718,644**
1 1/4	0.6250	0.0781	128,000	30.00	768,000	**760,131**	528,646	475,781	1,365,333	**828,115**	**880,438**
1 3/8	0.7563	0.0859	153,900	36.30	923,400	**913,939**	639,661	575,695	1,641,600	**991,673**	**1,054,984**
1 1/2	0.9000	0.0938	181,800	43.20	1,090,800	**1,079,624**	761,250	685,125	1,939,200	**1,165,881**	**1,241,226**
1 5/8	1.0563	0.1016	212,400	50.70	1,274,400	**1,261,343**	893,411	804,070	2,265,600	**1,358,129**	**1,446,555**
1 3/4	1.2250	0.1094	244,800	58.80	1,468,800	**1,453,751**	1,036,146	932,531	2,611,200	**1,558,916**	**1,661,469**
1 7/8	1.4063	0.1172	279,000	67.50	1,674,000	**1,656,848**	1,189,453	1,070,508	2,976,000	**1,768,242**	**1,885,969**
2	1.6000	0.1250	316,800	76.80	1,900,800	**1,881,325**	1,353,333	1,218,000	3,379,200	**2,005,110**	**2,139,057**
2 1/8	1.8063	0.1328	354,600	86.70	2,127,600	**2,105,801**	1,527,786	1,375,008	3,782,400	**2,231,513**	**2,382,726**
2 1/4	2.0250	0.1406	396,000	97.20	2,376,000	**2,351,656**	1,712,813	1,541,531	4,224,000	**2,485,458**	**2,654,984**
2 3/8	2.2563	0.1484	439,000	108.30	2,634,000	**2,607,012**	1,908,411	1,717,570	4,682,667	**2,745,830**	**2,934,716**
2 1/2	2.5000	0.1563	484,200	120.00	2,905,200	**2,875,434**	2,114,583	1,903,125	5,164,800	**3,018,964**	**3,228,256**

E = Modulus of Elasticity = psi	**29,000,000**
v = Velocity of span = ft/sec	**1**
t = Braking Time = seconds	**3**

$P_{DTL\ Tot}$ = Max. allowable Direct Tension Load (DTL) of the given rope system (all ropes on all sheaves) = 1/8 (12.5%) of the minimum ultimate tensile strength of the rope system. = lbs
$W_{S\ DTL}$ = Max. weight of span for given rope system based on Direct Tension Load (DTL) = $P_{DTL\ Tot}$ - $P_{B\ DTL}$ = lbs
$P_{B\ DTL}$ = Direct Tension Load in ropes due to braking = (($W_{S\ DTL}$/32.2)***v**)/**t** = lbs
$P_{Bend\ 72}$ = Load due to bending on the rope system based on sheave diameter of 72**c** = (0.7***E***d*a_{Total})/(72***c**)= lbs
$P_{Bend\ 80}$ = Load due to bending on the rope system based on sheave diameter of 80**c** = (0.7***E***d*a_{Total})/(80***c**)= lbs
$P_{Bend\ Tot}$ = Max. allowable Total Load (DTL + bending) on the given rope system (all ropes on all sheaves) = 2/9 (22.2%) of the ultimate tensile strength of the rope system. = lbs
$W_{S\ Bend\ 72}$ = Max. weight of span for given rope system based on Total Load (DTL + bending) and 72**c** dia. Sheave = $P_{bend\ Tot}$ - ($P_{bend\ 72}$ + $P_{brake\ Bend}$) = lbs
$W_{S\ Bend\ 80}$ = Max. weight of span for given rope system based on Total Load (DTL + bending) and 80**c** dia. Sheave = $P_{bend\ Tot}$ - ($P_{bend\ 80}$ + $P_{brake\ Bend}$) = lbs
$P_{B\ Bend\ 72}$ = Direct Tension Load in ropes due to braking using $W_{S\ Bend\ 72}$ = (($W_{S\ Bend\ 72}$/32.2)***v**)/**t** = lbs
$P_{B\ Bend\ 80}$ = Direct Tension Load in ropes due to braking using $W_{S\ Bend\ 80}$ = (($W_{S\ Bend\ 80}$/32.2)***v**)/**t** = lbs

APPENDIX—Rope Selection (EEIPS) (4 ropes per sheave)

AASHTO LRFD (EEIPS)											
c = Wire Rope Dia. (in)	**a** = Wire Rope Cross Section Area = $0.4c^2$ (in^2)	**d** = Wire Strand Dia. (in)	P_{ut} = Min. Ult. Tensile Str. of 1 Rope (lbs)	**Vertical Lift Span Weight**							
		For 6x19 rope, d is approx. = c/16	Double Extra Improved Plow Steel (EEIPS)	**4 Ropes/Sheave * 4 Sheaves = 16 Ropes**							
				a_{Total}	$P_{DTL\ Tot}$	$W_{S\ DTL}$	$P_{Bend\ 72}$	$P_{Bend\ 80}$	$P_{Bend\ Tot}$	$W_{S\ Bend\ 72}$	$W_{S\ Bend\ 80}$
3/4	0.2250	0.0469	57,600	3.60	115,200	**114,020**	63,438	57,094	204,800	**139,914**	**146,193**
7/8	0.3063	0.0547	78,000	4.90	156,000	**154,402**	86,345	77,711	277,333	**189,031**	**197,577**
1	0.4000	0.0625	101,200	6.40	202,400	**200,326**	112,778	101,500	359,822	**244,513**	**255,675**
1 1/8	0.5063	0.0703	127,200	8.10	254,400	**251,793**	142,734	128,461	452,267	**306,361**	**320,488**
1 1/4	0.6250	0.0781	156,400	10.00	312,800	**309,595**	176,215	158,594	556,089	**375,981**	**393,422**
1 3/8	0.7563	0.0859	188,000	12.10	376,000	**372,148**	213,220	191,898	668,444	**450,560**	**471,663**
1 1/2	0.9000	0.0938	222,000	14.40	444,000	**439,451**	253,750	228,375	789,333	**530,096**	**555,211**
1 5/8	1.0563	0.1016	258,000	16.90	516,000	**510,713**	297,804	268,023	917,333	**613,182**	**642,657**
1 3/4	1.2250	0.1094	300,000	19.60	600,000	**593,852**	345,382	310,844	1,066,667	**713,895**	**748,079**
1 7/8	1.4063	0.1172	342,000	22.50	684,000	**676,992**	396,484	356,836	1,216,000	**811,119**	**850,361**
2	1.6000	0.1250	388,000	25.60	776,000	**768,049**	451,111	406,000	1,379,556	**918,932**	**963,581**
2 1/8	1.8063	0.1328	434,000	28.90	868,000	**859,107**	509,262	458,336	1,543,111	**1,023,256**	**1,073,661**
2 1/4	2.0250	0.1406	484,000	32.40	968,000	**958,082**	570,938	513,844	1,720,889	**1,138,169**	**1,194,678**
2 3/8	2.2563	0.1484	538,000	36.10	1,076,000	**1,064,975**	636,137	572,523	1,912,889	**1,263,670**	**1,326,632**
2 1/2	2.5000	0.1563	590,000	40.00	1,180,000	**1,167,910**	704,861	634,375	2,097,778	**1,378,645**	**1,448,409**

E = Modulus of Elasticity = psi	**29,000,000**
v = Velocity of span = ft/sec	**1**
t = Braking Time = seconds	**3**

$P_{DTL\ Tot}$ = Max. allowable Direct Tension Load (DTL) of the given rope system (all ropes on all sheaves) = 1/8 (12.5%) of the minimum ultimate tensile strength of the rope system. = lbs
$W_{S\ DTL}$ = Max. weight of span for given rope system based on Direct Tension Load (DTL) = $P_{DTL\ Tot}$ - $P_{B\ DTL}$ = lbs
$P_{B\ DTL}$ = Direct Tension Load in ropes due to braking = $((W_{S\ DTL}/32.2)*v)/t$ = lbs
$P_{Bend\ 72}$ = Load due to bending on the rope system based on sheave diameter of 72**c** = $(0.7*E*d*a_{Total})/(72*c)$= lbs
$P_{Bend\ 80}$ = Load due to bending on the rope system based on sheave diameter of 80**c** = $(0.7*E*d*a_{Total})/(80*c)$= lbs
$P_{Bend\ Tot}$ = Max. allowable Total Load (DTL + bending) on the given rope system (all ropes on all sheaves) = 2/9 (22.2%) of the ultimate tensile strength of the rope system. = lbs
$W_{S\ Bend\ 72}$ = Max. weight of span for given rope system based on Total Load (DTL + bending) and 72**c** dia. Sheave = $P_{bend\ Tot}$ - ($P_{bend\ 72}$ + $P_{brake\ Bend}$) = lbs
$W_{S\ Bend\ 80}$ = Max. weight of span for given rope system based on Total Load (DTL + bending) and 80**c** dia. Sheave = $P_{bend\ Tot}$ - ($P_{bend\ 80}$ + $P_{brake\ Bend}$) = lbs
$P_{B\ Bend\ 72}$ = Direct Tension Load in ropes due to braking using $W_{S\ Bend\ 72}$ = $((W_{S\ Bend\ 72}/32.2)*v)/t$ = lbs
$P_{B\ Bend\ 80}$ = Direct Tension Load in ropes due to braking using $W_{S\ Bend\ 80}$ = $((W_{S\ Bend\ 80}/32.2)*v)/t$ = lbs

APPENDIX—Rope Selection (EEIPS) (6 ropes per sheave)

AASHTO LRFD (EEIPS)											
c = Wire Rope Dia. (in)	**a** = Wire Rope Cross Section Area = $0.4c^2$ (in^2)	**d** = Wire Strand Dia. (in)	$\mathbf{P_{ut}}$ = Min. Ult. Tensile Str. of 1 Rope (lbs)	**Vertical Lift Span Weight**							
		For 6x19 rope, d is approx. = c/16	Double Extra Improved Plow Steel (EEIPS)	**6 Ropes/Sheave * 4 Sheaves = 24 Ropes**							
				$\mathbf{a_{Total}}$	$\mathbf{P_{DTL\ Tot}}$	$\mathbf{W_{S\ DTL}}$	$\mathbf{P_{Bend\ 72}}$	$\mathbf{P_{Bend\ 80}}$	$\mathbf{P_{Bend\ Tot}}$	$\mathbf{W_{S\ Bend\ 72}}$	$\mathbf{W_{S\ Bend\ 80}}$
3/4	0.2250	0.0469	57,600	5.40	172,800	**171,030**	95,156	85,641	307,200	**209,871**	**219,289**
7/8	0.3063	0.0547	78,000	7.35	234,000	**231,602**	129,518	116,566	416,000	**283,547**	**296,366**
1	0.4000	0.0625	101,200	9.60	303,600	**300,489**	169,167	152,250	539,733	**366,770**	**383,513**
1 1/8	0.5063	0.0703	127,200	12.15	381,600	**377,690**	214,102	192,691	678,400	**459,541**	**480,732**
1 1/4	0.6250	0.0781	156,400	15.00	469,200	**464,393**	264,323	237,891	834,133	**563,972**	**590,134**
1 3/8	0.7563	0.0859	188,000	18.15	564,000	**558,221**	319,831	287,848	1,002,667	**675,840**	**707,495**
1 1/2	0.9000	0.0938	222,000	21.60	666,000	**659,176**	380,625	342,563	1,184,000	**795,144**	**832,816**
1 5/8	1.0563	0.1016	258,000	25.35	774,000	**766,070**	446,706	402,035	1,376,000	**919,773**	**963,986**
1 3/4	1.2250	0.1094	300,000	29.40	900,000	**890,779**	518,073	466,266	1,600,000	**1,070,842**	**1,122,118**
1 7/8	1.4063	0.1172	342,000	33.75	1,026,000	**1,015,488**	594,727	535,254	1,824,000	**1,216,678**	**1,275,542**
2	1.6000	0.1250	388,000	38.40	1,164,000	**1,152,074**	676,667	609,000	2,069,333	**1,378,398**	**1,445,371**
2 1/8	1.8063	0.1328	434,000	43.35	1,302,000	**1,288,660**	763,893	687,504	2,314,667	**1,534,884**	**1,610,491**
2 1/4	2.0250	0.1406	484,000	48.60	1,452,000	**1,437,123**	856,406	770,766	2,581,333	**1,707,254**	**1,792,017**
2 3/8	2.2563	0.1484	538,000	54.15	1,614,000	**1,597,463**	954,206	858,785	2,869,333	**1,895,505**	**1,989,948**
2 1/2	2.5000	0.1563	590,000	60.00	1,770,000	**1,751,865**	1,057,292	951,563	3,146,667	**2,067,967**	**2,172,613**

E = Modulus of Elasticity = psi	**29,000,000**
v = Velocity of span = ft/sec	**1**
t = Braking Time = seconds	**3**

$\mathbf{P_{DTL\ Tot}}$ = Max. allowable Direct Tension Load (DTL) of the given rope system (all ropes on all sheaves) = 1/8 (12.5%) of the minimum ultimate tensile strength of the rope system. = lbs
$\mathbf{W_{S\ DTL}}$ = Max. weight of span for given rope system based on Direct Tension Load (DTL) = $\mathbf{P_{DTL\ Tot}}$ - $\mathbf{P_{B\ DTL}}$ = lbs
$\mathbf{P_{B\ DTL}}$ = Direct Tension Load in ropes due to braking = (($\mathbf{W_{S\ DTL}}$/32.2)***v**)/**t** = lbs
$\mathbf{P_{Bend\ 72}}$ = Load due to bending on the rope system based on sheave diameter of 72**c** = (0.7*$\mathbf{E}$*$\mathbf{d}$*$\mathbf{a_{Total}}$)/(72*$\mathbf{c}$)= lbs
$\mathbf{P_{Bend\ 80}}$ = Load due to bending on the rope system based on sheave diameter of 80**c** = (0.7*$\mathbf{E}$*$\mathbf{d}$*$\mathbf{a_{Total}}$)/(80*$\mathbf{c}$)= lbs
$\mathbf{P_{Bend\ Tot}}$ = Max. allowable Total Load (DTL + bending) on the given rope system (all ropes on all sheaves) = 2/9 (22.2%) of the ultimate tensile strength of the rope system. = lbs
$\mathbf{W_{S\ Bend\ 72}}$ = Max. weight of span for given rope system based on Total Load (DTL + bending) and 72**c** dia. Sheave = $\mathbf{P_{bend\ Tot}}$ - ($\mathbf{P_{bend\ 72}}$ + $\mathbf{P_{brake\ Bend}}$) = lbs
$\mathbf{W_{S\ Bend\ 80}}$ = Max. weight of span for given rope system based on Total Load (DTL + bending) and 80**c** dia. Sheave = $\mathbf{P_{bend\ Tot}}$ - ($\mathbf{P_{bend\ 80}}$ + $\mathbf{P_{brake\ Bend}}$) = lbs
$\mathbf{P_{B\ Bend\ 72}}$ = Direct Tension Load in ropes due to braking using $\mathbf{W_{S\ Bend\ 72}}$ = (($\mathbf{W_{S\ Bend\ 72}}$/32.2)***v**)/**t** = lbs
$\mathbf{P_{B\ Bend\ 80}}$ = Direct Tension Load in ropes due to braking using $\mathbf{W_{S\ Bend\ 80}}$ = (($\mathbf{W_{S\ Bend\ 80}}$/32.2)***v**)/**t** = lbs

APPENDIX—Rope Selection (EEIPS) (8 ropes per sheave)

AASHTO LRFD (EEIPS)											
c = Wire Rope Dia. (in)	**a** = Wire Rope Cross Section Area = $0.4\mathbf{c}^2$ (in^2)	**d** = Wire Strand Dia. (in)	$\mathbf{P_{ut}}$ = Min. Ult. Tensile Str. of 1 Rope (lbs)	**Vertical Lift Span Weight**							
		For 6x19 rope, d is approx. = c/16	Double Extra Improved Plow Steel (EEIPS)	**8 Ropes/Sheave * 4 Sheaves = 32 Ropes**							
				$\mathbf{a_{Total}}$	$\mathbf{P_{DTL\ Tot}}$	$\mathbf{W_{S\ DTL}}$	$\mathbf{P_{Bend\ 72}}$	$\mathbf{P_{Bend\ 80}}$	$\mathbf{P_{Bend\ Tot}}$	$\mathbf{W_{S\ Bend\ 72}}$	$\mathbf{W_{S\ Bend\ 80}}$
3/4	0.2250	0.0469	57,600	7.20	230,400	**228,039**	126,875	114,188	409,600	**279,828**	**292,386**
7/8	0.3063	0.0547	78,000	9.80	312,000	**308,803**	172,691	155,422	554,667	**378,062**	**395,154**
1	0.4000	0.0625	101,200	12.80	404,800	**400,652**	225,556	203,000	719,644	**489,027**	**511,351**
1 1/8	0.5063	0.0703	127,200	16.20	508,800	**503,587**	285,469	256,922	904,533	**612,722**	**640,976**
1 1/4	0.6250	0.0781	156,400	20.00	625,600	**619,190**	352,431	317,188	1,112,178	**751,963**	**786,845**
1 3/8	0.7563	0.0859	188,000	24.20	752,000	**744,295**	426,441	383,797	1,336,889	**901,120**	**943,327**
1 1/2	0.9000	0.0938	222,000	28.80	888,000	**878,902**	507,500	456,750	1,578,667	**1,060,192**	**1,110,422**
1 5/8	1.0563	0.1016	258,000	33.80	1,032,000	**1,021,426**	595,608	536,047	1,834,667	**1,226,364**	**1,285,314**
1 3/4	1.2250	0.1094	300,000	39.20	1,200,000	**1,187,705**	690,764	621,688	2,133,333	**1,427,789**	**1,496,158**
1 7/8	1.4063	0.1172	342,000	45.00	1,368,000	**1,353,984**	792,969	713,672	2,432,000	**1,622,238**	**1,700,722**
2	1.6000	0.1250	388,000	51.20	1,552,000	**1,536,098**	902,222	812,000	2,759,111	**1,837,863**	**1,927,161**
2 1/8	1.8063	0.1328	434,000	57.80	1,736,000	**1,718,213**	1,018,524	916,672	3,086,222	**2,046,512**	**2,147,321**
2 1/4	2.0250	0.1406	484,000	64.80	1,936,000	**1,916,164**	1,141,875	1,027,688	3,441,778	**2,276,338**	**2,389,356**
2 3/8	2.2563	0.1484	538,000	72.20	2,152,000	**2,129,951**	1,272,274	1,145,047	3,825,778	**2,527,341**	**2,653,264**
2 1/2	2.5000	0.1563	590,000	80.00	2,360,000	**2,335,820**	1,409,722	1,268,750	4,195,556	**2,757,290**	**2,896,818**

E = Modulus of Elasticity = psi	**29,000,000**
v = Velocity of span = ft/sec	**1**
t = Braking Time = seconds	**3**

$\mathbf{P_{DTL\ Tot}}$ = Max. allowable Direct Tension Load (DTL) of the given rope system (all ropes on all sheaves) = 1/8 (12.5%) of the minimum ultimate tensile strength of the rope system. = lbs
$\mathbf{W_{S\ DTL}}$ = Max. weight of span for given rope system based on Direct Tension Load (DTL) = $\mathbf{P_{DTL\ Tot}}$ - $\mathbf{P_{B\ DTL}}$ = lbs
$\mathbf{P_{B\ DTL}}$ = Direct Tension Load in ropes due to braking = $((\mathbf{W_{S\ DTL}}/32.2)*\mathbf{v})/\mathbf{t}$ = lbs
$\mathbf{P_{Bend\ 72}}$ = Load due to bending on the rope system based on sheave diameter of 72**c** = $(0.7*\mathbf{E}*\mathbf{d}*\mathbf{a_{Total}})/(72*\mathbf{c})$= lbs
$\mathbf{P_{Bend\ 80}}$ = Load due to bending on the rope system based on sheave diameter of 80**c** = $(0.7*\mathbf{E}*\mathbf{d}*\mathbf{a_{Total}})/(80*\mathbf{c})$= lbs
$\mathbf{P_{Bend\ Tot}}$ = Max. allowable Total Load (DTL + bending) on the given rope system (all ropes on all sheaves) = 2/9 (22.2%) of the ultimate tensile strength of the rope system. = lbs
$\mathbf{W_{S\ Bend\ 72}}$ = Max. weight of span for given rope system based on Total Load (DTL + bending) and 72**c** dia. Sheave = $\mathbf{P_{bend\ Tot}}$ - ($\mathbf{P_{bend\ 72}}$ + $\mathbf{P_{brake\ Bend}}$) = lbs
$\mathbf{W_{S\ Bend\ 80}}$ = Max. weight of span for given rope system based on Total Load (DTL + bending) and 80**c** dia. Sheave = $\mathbf{P_{bend\ Tot}}$ - ($\mathbf{P_{bend\ 80}}$ + $\mathbf{P_{brake\ Bend}}$) = lbs
$\mathbf{P_{B\ Bend\ 72}}$ = Direct Tension Load in ropes due to braking using $\mathbf{W_{S\ Bend\ 72}}$ = $((\mathbf{W_{S\ Bend\ 72}}/32.2)*\mathbf{v})/\mathbf{t}$ = lbs
$\mathbf{P_{B\ Bend\ 80}}$ = Direct Tension Load in ropes due to braking using $\mathbf{W_{S\ Bend\ 80}}$ = $((\mathbf{W_{S\ Bend\ 80}}/32.2)*\mathbf{v})/\mathbf{t}$ = lbs

APPENDIX—Rope Selection (EEIPS) (10 ropes per sheave)

AASHTO LRFD (EEIPS)											
c = Wire Rope Dia. (in)	**a** = Wire Rope Cross Section Area = $0.4c^2$ (in^2)	**d** = Wire Strand Dia. (in)	P_{ut} = Min. Ult. Tensile Str. of 1 Rope (lbs)	**Vertical Lift Span Weight**							
		For 6x19 rope, d is approx. = c/16	Double Extra Improved Plow Steel (EEIPS)	**10 Ropes/Sheave * 4 Sheaves = 40 Ropes**							
				a_{Total}	$P_{DTL\ Tot}$	$W_{S\ DTL}$	$P_{Bend\ 72}$	$P_{Bend\ 80}$	$P_{Bend\ Tot}$	$W_{S\ Bend\ 72}$	$W_{S\ Bend\ 80}$
3/4	0.2250	0.0469	57,600	9.00	288,000	**285,049**	158,594	142,734	512,000	**349,785**	**365,482**
7/8	0.3063	0.0547	78,000	12.25	390,000	**386,004**	215,864	194,277	693,333	**472,578**	**493,943**
1	0.4000	0.0625	101,200	16.00	506,000	**500,816**	281,944	253,750	899,556	**611,283**	**639,189**
1 1/8	0.5063	0.0703	127,200	20.25	636,000	**629,484**	356,836	321,152	1,130,667	**765,902**	**801,220**
1 1/4	0.6250	0.0781	156,400	25.00	782,000	**773,988**	440,538	396,484	1,390,222	**939,954**	**983,556**
1 3/8	0.7563	0.0859	188,000	30.25	940,000	**930,369**	533,051	479,746	1,671,111	**1,126,399**	**1,179,158**
1 1/2	0.9000	0.0938	222,000	36.00	1,110,000	**1,098,627**	634,375	570,938	1,973,333	**1,325,239**	**1,388,027**
1 5/8	1.0563	0.1016	258,000	42.25	1,290,000	**1,276,783**	744,510	670,059	2,293,333	**1,532,955**	**1,606,643**
1 3/4	1.2250	0.1094	300,000	49.00	1,500,000	**1,484,631**	863,455	777,109	2,666,667	**1,784,736**	**1,870,197**
1 7/8	1.4063	0.1172	342,000	56.25	1,710,000	**1,692,480**	991,211	892,090	3,040,000	**2,027,797**	**2,125,903**
2	1.6000	0.1250	388,000	64.00	1,940,000	**1,920,123**	1,127,778	1,015,000	3,448,889	**2,297,329**	**2,408,952**
2 1/8	1.8063	0.1328	434,000	72.25	2,170,000	**2,147,766**	1,273,155	1,145,840	3,857,778	**2,558,141**	**2,684,152**
2 1/4	2.0250	0.1406	484,000	81.00	2,420,000	**2,395,205**	1,427,344	1,284,609	4,302,222	**2,845,423**	**2,986,695**
2 3/8	2.2563	0.1484	538,000	90.25	2,690,000	**2,662,439**	1,590,343	1,431,309	4,782,222	**3,159,176**	**3,316,580**
2 1/2	2.5000	0.1563	590,000	100.00	2,950,000	**2,919,775**	1,762,153	1,585,938	5,244,444	**3,446,612**	**3,621,022**

E = Modulus of Elasticity = psi	**29,000,000**
v = Velocity of span = ft/sec	**1**
t = Braking Time = seconds	**3**

$P_{DTL\ Tot}$ = Max. allowable Direct Tension Load (DTL) of the given rope system (all ropes on all sheaves) = 1/8 (12.5%) of the minimum ultimate tensile strength of the rope system. = lbs
$W_{S\ DTL}$ = Max. weight of span for given rope system based on Direct Tension Load (DTL) = $P_{DTL\ Tot}$ - $P_{B\ DTL}$ = lbs
$P_{B\ DTL}$ = Direct Tension Load in ropes due to braking = $((W_{S\ DTL}/32.2)*v)/t$ = lbs
$P_{Bend\ 72}$ = Load due to bending on the rope system based on sheave diameter of 72**c** = $(0.7*E*d*a_{Total})/(72*c)$= lbs
$P_{Bend\ 80}$ = Load due to bending on the rope system based on sheave diameter of 80**c** = $(0.7*E*d*a_{Total})/(80*c)$= lbs
$P_{Bend\ Tot}$ = Max. allowable Total Load (DTL + bending) on the given rope system (all ropes on all sheaves) = 2/9 (22.2%) of the ultimate tensile strength of the rope system. = lbs
$W_{S\ Bend\ 72}$ = Max. weight of span for given rope system based on Total Load (DTL + bending) and 72**c** dia. Sheave = $P_{bend\ Tot}$ - ($P_{bend\ 72}$ + $P_{brake\ Bend}$) = lbs
$W_{S\ Bend\ 80}$ = Max. weight of span for given rope system based on Total Load (DTL + bending) and 80**c** dia. Sheave = $P_{bend\ Tot}$ - ($P_{bend\ 80}$ + $P_{brake\ Bend}$) = lbs
$P_{B\ Bend\ 72}$ = Direct Tension Load in ropes due to braking using $W_{S\ Bend\ 72}$ = $((W_{S\ Bend\ 72}/32.2)*v)/t$ = lbs
$P_{B\ Bend\ 80}$ = Direct Tension Load in ropes due to braking using $W_{S\ Bend\ 80}$ = $((W_{S\ Bend\ 80}/32.2)*v)/t$ = lbs

APPENDIX—Rope Selection (EEIPS) (12 ropes per sheave)

AASHTO LRFD (EEIPS)											
c = Wire Rope Dia. (in)	**a** = Wire Rope Cross Section Area = $0.4c^2$ (in^2)	**d** = Wire Strand Dia. (in)	$\mathbf{P_{ut}}$ = Min. Ult. Tensile Str. of 1 Rope (lbs)	**Vertical Lift Span Weight**							
		For 6x19 rope, d is approx. = c/16	Double Extra Improved Plow Steel (EEIPS)	**12 Ropes/Sheave * 4 Sheaves = 48 Ropes**							
				$\mathbf{a_{Total}}$	$\mathbf{P_{DTL\ Tot}}$	$\mathbf{W_{S\ DTL}}$	$\mathbf{P_{Bend\ 72}}$	$\mathbf{P_{Bend\ 80}}$	$\mathbf{P_{Bend\ Tot}}$	$\mathbf{W_{S\ Bend\ 72}}$	$\mathbf{W_{S\ Bend\ 80}}$
3/4	0.2250	0.0469	57,600	10.80	345,600	**342,059**	190,313	171,281	614,400	**419,742**	**438,579**
7/8	0.3063	0.0547	78,000	14.70	468,000	**463,205**	259,036	233,133	832,000	**567,093**	**592,731**
1	0.4000	0.0625	101,200	19.20	607,200	**600,979**	338,333	304,500	1,079,467	**733,540**	**767,026**
1 1/8	0.5063	0.0703	127,200	24.30	763,200	**755,380**	428,203	385,383	1,356,800	**919,083**	**961,464**
1 1/4	0.6250	0.0781	156,400	30.00	938,400	**928,785**	528,646	475,781	1,668,267	**1,127,944**	**1,180,267**
1 3/8	0.7563	0.0859	188,000	36.30	1,128,000	**1,116,443**	639,661	575,695	2,005,333	**1,351,679**	**1,414,990**
1 1/2	0.9000	0.0938	222,000	43.20	1,332,000	**1,318,352**	761,250	685,125	2,368,000	**1,590,287**	**1,665,632**
1 5/8	1.0563	0.1016	258,000	50.70	1,548,000	**1,532,139**	893,411	804,070	2,752,000	**1,839,546**	**1,927,971**
1 3/4	1.2250	0.1094	300,000	58.80	1,800,000	**1,781,557**	1,036,146	932,531	3,200,000	**2,141,684**	**2,244,236**
1 7/8	1.4063	0.1172	342,000	67.50	2,052,000	**2,030,975**	1,189,453	1,070,508	3,648,000	**2,433,357**	**2,551,083**
2	1.6000	0.1250	388,000	76.80	2,328,000	**2,304,148**	1,353,333	1,218,000	4,138,667	**2,756,795**	**2,890,742**
2 1/8	1.8063	0.1328	434,000	86.70	2,604,000	**2,577,320**	1,527,786	1,375,008	4,629,333	**3,069,769**	**3,220,982**
2 1/4	2.0250	0.1406	484,000	97.20	2,904,000	**2,874,246**	1,712,813	1,541,531	5,162,667	**3,414,507**	**3,584,034**
2 3/8	2.2563	0.1484	538,000	108.30	3,228,000	**3,194,926**	1,908,411	1,717,570	5,738,667	**3,791,011**	**3,979,897**
2 1/2	2.5000	0.1563	590,000	120.00	3,540,000	**3,503,730**	2,114,583	1,903,125	6,293,333	**4,135,935**	**4,345,227**

E = Modulus of Elasticity = psi	**29,000,000**
v = Velocity of span = ft/sec	**1**
t = Braking Time = seconds	**3**

$\mathbf{P_{DTL\ Tot}}$ = Max. allowable Direct Tension Load (DTL) of the given rope system (all ropes on all sheaves) = 1/8 (12.5%) of the minimum ultimate tensile strength of the rope system. = lbs
$\mathbf{W_{S\ DTL}}$ = Max. weight of span for given rope system based on Direct Tension Load (DTL) = $\mathbf{P_{DTL\ Tot}}$ - $\mathbf{P_{B\ DTL}}$ = lbs
$\mathbf{P_{B\ DTL}}$ = Direct Tension Load in ropes due to braking = (($\mathbf{W_{S\ DTL}}$/32.2)*$\mathbf{v}$)/$\mathbf{t}$ = lbs
$\mathbf{P_{Bend\ 72}}$ = Load due to bending on the rope system based on sheave diameter of 72**c** = (0.7*$\mathbf{E}$*$\mathbf{d}$*$\mathbf{a_{Total}}$)/(72*$\mathbf{c}$)= lbs
$\mathbf{P_{Bend\ 80}}$ = Load due to bending on the rope system based on sheave diameter of 80**c** = (0.7*$\mathbf{E}$*$\mathbf{d}$*$\mathbf{a_{Total}}$)/(80*$\mathbf{c}$)= lbs
$\mathbf{P_{Bend\ Tot}}$ = Max. allowable Total Load (DTL + bending) on the given rope system (all ropes on all sheaves) = 2/9 (22.2%) of the ultimate tensile strength of the rope system. = lbs
$\mathbf{W_{S\ Bend\ 72}}$ = Max. weight of span for given rope system based on Total Load (DTL + bending) and 72**c** dia. Sheave = $\mathbf{P_{bend\ Tot}}$ - ($\mathbf{P_{bend\ 72}}$ + $\mathbf{P_{brake\ Bend}}$) = lbs
$\mathbf{W_{S\ Bend\ 80}}$ = Max. weight of span for given rope system based on Total Load (DTL + bending) and 80**c** dia. Sheave = $\mathbf{P_{bend\ Tot}}$ - ($\mathbf{P_{bend\ 80}}$ + $\mathbf{P_{brake\ Bend}}$) = lbs
$\mathbf{P_{B\ Bend\ 72}}$ = Direct Tension Load in ropes due to braking using $\mathbf{W_{S\ Bend\ 72}}$ = (($\mathbf{W_{S\ Bend\ 72}}$/32.2)*$\mathbf{v}$)/$\mathbf{t}$ = lbs
$\mathbf{P_{B\ Bend\ 80}}$ = Direct Tension Load in ropes due to braking using $\mathbf{W_{S\ Bend\ 80}}$ = (($\mathbf{W_{S\ Bend\ 80}}$/32.2)*$\mathbf{v}$)/$\mathbf{t}$ = lbs

APPENDIX—Rope Selection (EEIPS Galvanized) (4 ropes per sheave)

AASHTO LRFD (EEIPS- Galvanized)											
c = Wire Rope Dia.(in)	**a** = Wire Rope Cross Section Area = $0.4\mathbf{c}^2$ (in^2)	**d** = Wire Strand Dia. (in)	$\mathbf{P_{ut}}$ = Min. Ult. Tensile Str. of 1 Rope (lbs)	**Vertical Lift Span Weight**							
		For 6x19 rope, d is approx. = c/16	(EEIPS) Galvanized	**4 Ropes/Sheave * 4 Sheaves = 16 Ropes**							
				$\mathbf{a_{Total}}$	$\mathbf{P_{DTL\ Tot}}$	$\mathbf{W_{S\ DTL}}$	$\mathbf{P_{Bend\ 72}}$	$\mathbf{P_{Bend\ 80}}$	$\mathbf{P_{Bend\ Tot}}$	$\mathbf{W_{S\ Bend\ 72}}$	$\mathbf{W_{S\ Bend\ 80}}$
3/4	0.2250	0.0469	51,800	3.60	103,600	**102,539**	63,438	57,094	184,178	**119,503**	**125,782**
7/8	0.3063	0.0547	70,200	4.90	140,400	**138,961**	86,345	77,711	249,600	**161,582**	**170,128**
1	0.4000	0.0625	91,100	6.40	182,200	**180,333**	112,778	101,500	323,911	**208,970**	**220,132**
1 1/8	0.5063	0.0703	114,500	8.10	229,000	**226,654**	142,734	128,461	407,111	**261,668**	**275,795**
1 1/4	0.6250	0.0781	140,800	10.00	281,600	**278,715**	176,215	158,594	500,622	**321,083**	**338,524**
1 3/8	0.7563	0.0859	169,200	12.10	338,400	**334,933**	213,220	191,898	601,600	**384,400**	**405,504**
1 1/2	0.9000	0.0938	199,800	14.40	399,600	**395,506**	253,750	228,375	710,400	**451,971**	**477,086**
1 5/8	1.0563	0.1016	232,200	16.90	464,400	**459,642**	297,804	268,023	825,600	**522,388**	**551,864**
1 3/4	1.2250	0.1094	270,000	19.60	540,000	**534,467**	345,382	310,844	960,000	**608,321**	**642,505**
1 7/8	1.4063	0.1172	307,800	22.50	615,600	**609,293**	396,484	356,836	1,094,400	**690,765**	**730,007**
2	1.6000	0.1250	349,200	25.60	698,400	**691,244**	451,111	406,000	1,241,600	**782,390**	**827,039**
2 1/8	1.8063	0.1328	390,600	28.90	781,200	**773,196**	509,262	458,336	1,388,800	**870,526**	**920,931**
2 1/4	2.0250	0.1406	435,600	32.40	871,200	**862,274**	570,938	513,844	1,548,800	**967,843**	**1,024,352**
2 3/8	2.2563	0.1484	484,200	36.10	968,400	**958,478**	636,137	572,523	1,721,600	**1,074,341**	**1,137,303**
2 1/2	2.5000	0.1563	531,000	40.00	1,062,000	**1,051,119**	704,861	634,375	1,888,000	**1,171,017**	**1,240,780**

E = Modulus of Elasticity = psi	**29,000,000**
v = Velocity of span = ft/sec	**1**
t = Braking Time = seconds	**3**

$\mathbf{P_{DTL\ Tot}}$ = Max. allowable Direct Tension Load (DTL) of the given rope system (all ropes on all sheaves) = 1/8 (12.5%) of the minimum ultimate tensile strength of the rope system. = lbs
$\mathbf{W_{S\ DTL}}$ = Max. weight of span for given rope system based on Direct Tension Load (DTL) = $\mathbf{P_{DTL\ Tot}}$ - $\mathbf{P_{B\ DTL}}$ = lbs
$\mathbf{P_{B\ DTL}}$ = Direct Tension Load in ropes due to braking = $((\mathbf{W_{S\ DTL}}/32.2)*\mathbf{v})/\mathbf{t}$ = lbs
$\mathbf{P_{Bend\ 72}}$ = Load due to bending on the rope system based on sheave diameter of 72**c** = $(0.7*\mathbf{E}*\mathbf{d}*\mathbf{a_{Total}})/(72*\mathbf{c})$= lbs
$\mathbf{P_{Bend\ 80}}$ = Load due to bending on the rope system based on sheave diameter of 80**c** = $(0.7*\mathbf{E}*\mathbf{d}*\mathbf{a_{Total}})/(80*\mathbf{c})$= lbs
$\mathbf{P_{Bend\ Tot}}$ = Max. allowable Total Load (DTL + bending) on the given rope system (all ropes on all sheaves) = 2/9 (22.2%) of the ultimate tensile strength of the rope system. = lbs
$\mathbf{W_{S\ Bend\ 72}}$ = Max. weight of span for given rope system based on Total Load (DTL + bending) and 72**c** dia. Sheave = $\mathbf{P_{bend\ Tot}}$ - ($\mathbf{P_{bend\ 72}}$ + $\mathbf{P_{brale\ Bend}}$) = lbs
$\mathbf{W_{S\ Bend\ 80}}$ = Max. weight of span for given rope system based on Total Load (DTL + bending) and 80**c** dia. Sheave = $\mathbf{P_{bend\ Tot}}$ - ($\mathbf{P_{bend\ 80}}$ + $\mathbf{P_{brale\ Bend}}$) = lbs
$\mathbf{P_{B\ Bend\ 72}}$ = Direct Tension Load in ropes due to braking using $\mathbf{W_{S\ Bend\ 72}}$ = $((\mathbf{W_{S\ Bend\ 72}}/32.2)*\mathbf{v})/\mathbf{t}$ = lbs
$\mathbf{P_{B\ Bend\ 80}}$ = Direct Tension Load in ropes due to braking using $\mathbf{W_{S\ Bend\ 80}}$ = $((\mathbf{W_{S\ Bend\ 80}}/32.2)*\mathbf{v})/\mathbf{t}$ = lbs

APPENDIX—Rope Selection (EEIPS Galvanized) (6 ropes per sheave)

AASHTO LRFD (EEIPS- Galvanized)											
c = Wire Rope Dia. (in)	**a** = Wire Rope Cross Section Area = $0.4\mathbf{c}^2$ (in^2)	**d** = Wire Strand Dia. (in)	$\mathbf{P_{ut}}$ = Min. Ult. Tensile Str. of 1 Rope (lbs)	**Vertical Lift Span Weight**							
		For 6x19 rope, d is approx. = c/16	(EEIPS) Galvanized	**6 Ropes/Sheave * 4 Sheaves = 24 Ropes**							
				$\mathbf{a_{Total}}$	$\mathbf{P_{DTL\ Tot}}$	$\mathbf{W_{S\ DTL}}$	$\mathbf{P_{Bend\ 72}}$	$\mathbf{P_{Bend\ 80}}$	$\mathbf{P_{Bend\ Tot}}$	$\mathbf{W_{S\ Bend\ 72}}$	$\mathbf{W_{S\ Bend\ 80}}$
3/4	0.2250	0.0469	51,800	5.40	155,400	**153,808**	95,156	85,641	276,267	**179,255**	**188,673**
7/8	0.3063	0.0547	70,200	7.35	210,600	**208,442**	129,518	116,566	374,400	**242,373**	**255,192**
1	0.4000	0.0625	91,100	9.60	273,300	**270,500**	169,167	152,250	485,867	**313,455**	**330,198**
1 1/8	0.5063	0.0703	114,500	12.15	343,500	**339,981**	214,102	192,691	610,667	**392,502**	**413,693**
1 1/4	0.6250	0.0781	140,800	15.00	422,400	**418,072**	264,323	237,891	750,933	**481,625**	**507,786**
1 3/8	0.7563	0.0859	169,200	18.15	507,600	**502,399**	319,831	287,848	902,400	**576,600**	**608,256**
1 1/2	0.9000	0.0938	199,800	21.60	599,400	**593,259**	380,625	342,563	1,065,600	**677,957**	**715,629**
1 5/8	1.0563	0.1016	232,200	25.35	696,600	**689,463**	446,706	402,035	1,238,400	**783,583**	**827,796**
1 3/4	1.2250	0.1094	270,000	29.40	810,000	**801,701**	518,073	466,266	1,440,000	**912,481**	**963,758**
1 7/8	1.4063	0.1172	307,800	33.75	923,400	**913,939**	594,727	535,254	1,641,600	**1,036,147**	**1,095,011**
2	1.6000	0.1250	349,200	38.40	1,047,600	**1,036,866**	676,667	609,000	1,862,400	**1,173,584**	**1,240,558**
2 1/8	1.8063	0.1328	390,600	43.35	1,171,800	**1,159,794**	763,893	687,504	2,083,200	**1,305,789**	**1,381,396**
2 1/4	2.0250	0.1406	435,600	48.60	1,306,800	**1,293,411**	856,406	770,766	2,323,200	**1,451,765**	**1,536,528**
2 3/8	2.2563	0.1484	484,200	54.15	1,452,600	**1,437,717**	954,206	858,785	2,582,400	**1,611,512**	**1,705,955**
2 1/2	2.5000	0.1563	531,000	60.00	1,593,000	**1,576,678**	1,057,292	951,563	2,832,000	**1,756,525**	**1,861,171**

E = Modulus of Elasticity = psi	**29,000,000**
v = Velocity of span = ft/sec	**1**
t = Braking Time = seconds	**3**

$\mathbf{P_{DTL\ Tot}}$ = Max. allowable Direct Tension Load (DTL) of the given rope system (all ropes on all sheaves) = 1/8 (12.5%) of the minimum ultimate tensile strength of the rope system. = lbs
$\mathbf{W_{S\ DTL}}$ = Max. weight of span for given rope system based on Direct Tension Load (DTL) = $\mathbf{P_{DTL\ Tot}}$ - $\mathbf{P_{B\ DTL}}$ = lbs
$\mathbf{P_{B\ DTL}}$ = Direct Tension Load in ropes due to braking = (($\mathbf{W_{S\ DTL}}$/32.2)*$\mathbf{v}$)/$\mathbf{t}$ = lbs
$\mathbf{P_{Bend\ 72}}$ = Load due to bending on the rope system based on sheave diameter of 72**c** = (0.7*$\mathbf{E}$*$\mathbf{d}$*$\mathbf{a_{Total}}$)/(72*$\mathbf{c}$)= lbs
$\mathbf{P_{Bend\ 80}}$ = Load due to bending on the rope system based on sheave diameter of 80**c** = (0.7*$\mathbf{E}$*$\mathbf{d}$*$\mathbf{a_{Total}}$)/(80*$\mathbf{c}$)= lbs
$\mathbf{P_{Bend\ Tot}}$ = Max. allowable Total Load (DTL + bending) on the given rope system (all ropes on all sheaves) = 2/9 (22.2%) of the ultimate tensile strength of the rope system. = lbs
$\mathbf{W_{S\ Bend\ 72}}$ = Max. weight of span for given rope system based on Total Load (DTL + bending) and 72**c** dia. Sheave = $\mathbf{P_{bend\ Tot}}$ - ($\mathbf{P_{bend\ 72}}$ + $\mathbf{P_{brale\ Bend}}$) = lbs
$\mathbf{W_{S\ Bend\ 80}}$ = Max. weight of span for given rope system based on Total Load (DTL + bending) and 80**c** dia. Sheave = $\mathbf{P_{bend\ Tot}}$ - ($\mathbf{P_{bend\ 80}}$ + $\mathbf{P_{brale\ Bend}}$) = lbs
$\mathbf{P_{B\ Bend\ 72}}$ = Direct Tension Load in ropes due to braking using $\mathbf{W_{S\ Bend\ 72}}$ = (($\mathbf{W_{S\ Bend\ 72}}$/32.2)*$\mathbf{v}$)/$\mathbf{t}$ = lbs
$\mathbf{P_{B\ Bend\ 80}}$ = Direct Tension Load in ropes due to braking using $\mathbf{W_{S\ Bend\ 80}}$ = (($\mathbf{W_{S\ Bend\ 80}}$/32.2)*$\mathbf{v}$)/$\mathbf{t}$ = lbs

APPENDIX—Rope Selection (EEIPS Galvanized) (8 ropes per sheave)

AASHTO LRFD (EEIPS- Galvanized)											
c = Wire Rope Dia. (in)	**a** = Wire Rope Cross Section Area = $0.4\mathbf{c}^2$ (in^2)	**d** = Wire Strand Dia. (in)	$\mathbf{P_{ut}}$ = Min. Ult. Tensile Str. of 1 Rope (lbs)	**Vertical Lift Span Weight**							
		For 6x19 rope, d is approx. = c/16	(EEIPS) Galvanized	**8 Ropes/Sheave * 4 Sheaves = 32 Ropes**							
				$\mathbf{a_{Total}}$	$\mathbf{P_{DTL\ Tot}}$	$\mathbf{W_{S\ DTL}}$	$\mathbf{P_{Bend\ 72}}$	$\mathbf{P_{Bend\ 80}}$	$\mathbf{P_{Bend\ Tot}}$	$\mathbf{W_{S\ Bend\ 72}}$	$\mathbf{W_{S\ Bend\ 80}}$
3/4	0.2250	0.0469	51,800	7.20	207,200	**205,077**	126,875	114,188	368,356	**239,006**	**251,564**
7/8	0.3063	0.0547	70,200	9.80	280,800	**277,923**	172,691	155,422	499,200	**323,164**	**340,256**
1	0.4000	0.0625	91,100	12.80	364,400	**360,666**	225,556	203,000	647,822	**417,940**	**440,265**
1 1/8	0.5063	0.0703	114,500	16.20	458,000	**453,307**	285,469	256,922	814,222	**523,336**	**551,590**
1 1/4	0.6250	0.0781	140,800	20.00	563,200	**557,430**	352,431	317,188	1,001,244	**642,166**	**677,048**
1 3/8	0.7563	0.0859	169,200	24.20	676,800	**669,866**	426,441	383,797	1,203,200	**768,800**	**811,008**
1 1/2	0.9000	0.0938	199,800	28.80	799,200	**791,011**	507,500	456,750	1,420,800	**903,942**	**954,172**
1 5/8	1.0563	0.1016	232,200	33.80	928,800	**919,284**	595,608	536,047	1,651,200	**1,044,777**	**1,103,727**
1 3/4	1.2250	0.1094	270,000	39.20	1,080,000	**1,068,934**	690,764	621,688	1,920,000	**1,216,641**	**1,285,010**
1 7/8	1.4063	0.1172	307,800	45.00	1,231,200	**1,218,585**	792,969	713,672	2,188,800	**1,381,530**	**1,460,014**
2	1.6000	0.1250	349,200	51.20	1,396,800	**1,382,489**	902,222	812,000	2,483,200	**1,564,779**	**1,654,077**
2 1/8	1.8063	0.1328	390,600	57.80	1,562,400	**1,546,392**	1,018,524	916,672	2,777,600	**1,741,052**	**1,841,861**
2 1/4	2.0250	0.1406	435,600	64.80	1,742,400	**1,724,548**	1,141,875	1,027,688	3,097,600	**1,935,687**	**2,048,704**
2 3/8	2.2563	0.1484	484,200	72.20	1,936,800	**1,916,956**	1,272,274	1,145,047	3,443,200	**2,148,683**	**2,274,606**
2 1/2	2.5000	0.1563	531,000	80.00	2,124,000	**2,102,238**	1,409,722	1,268,750	3,776,000	**2,342,033**	**2,481,561**

E = Modulus of Elasticity = psi	**29,000,000**
v = Velocity of span = ft/sec	**1**
t = Braking Time = seconds	**3**

$\mathbf{P_{DTL\ Tot}}$ = Max. allowable Direct Tension Load (DTL) of the given rope system (all ropes on all sheaves) = 1/8 (12.5%) of the minimum ultimate tensile strength of the rope system. = lbs
$\mathbf{W_{S\ DTL}}$ = Max. weight of span for given rope system based on Direct Tension Load (DTL) = $\mathbf{P_{DTL\ Tot}}$ - $\mathbf{P_{B\ DTL}}$ = lbs
$\mathbf{P_{B\ DTL}}$ = Direct Tension Load in ropes due to braking = $((\mathbf{W_{S\ DTL}}/32.2)*\mathbf{v})/\mathbf{t}$ = lbs
$\mathbf{P_{Bend\ 72}}$ = Load due to bending on the rope system based on sheave diameter of 72**c** = $(0.7*\mathbf{E}*\mathbf{d}*\mathbf{a_{Total}})/(72*\mathbf{c})$= lbs
$\mathbf{P_{Bend\ 80}}$ = Load due to bending on the rope system based on sheave diameter of 80**c** = $(0.7*\mathbf{E}*\mathbf{d}*\mathbf{a_{Total}})/(80*\mathbf{c})$= lbs
$\mathbf{P_{Bend\ Tot}}$ = Max. allowable Total Load (DTL + bending) on the given rope system (all ropes on all sheaves) = 2/9 (22.2%) of the ultimate tensile strength of the rope system. = lbs
$\mathbf{W_{S\ Bend\ 72}}$ = Max. weight of span for given rope system based on Total Load (DTL + bending) and 72**c** dia. Sheave = $\mathbf{P_{bend\ Tot}}$ - ($\mathbf{P_{bend\ 72}}$ + $\mathbf{P_{brake\ Bend}}$) = lbs
$\mathbf{W_{S\ Bend\ 80}}$ = Max. weight of span for given rope system based on Total Load (DTL + bending) and 80**c** dia. Sheave = $\mathbf{P_{bend\ Tot}}$ - ($\mathbf{P_{bend\ 80}}$ + $\mathbf{P_{brake\ Bend}}$) = lbs
$\mathbf{P_{B\ Bend\ 72}}$ = Direct Tension Load in ropes due to braking using $\mathbf{W_{S\ Bend\ 72}}$ = $((\mathbf{W_{S\ Bend\ 72}}/32.2)*\mathbf{v})/\mathbf{t}$ = lbs
$\mathbf{P_{B\ Bend\ 80}}$ = Direct Tension Load in ropes due to braking using $\mathbf{W_{S\ Bend\ 80}}$ = $((\mathbf{W_{S\ Bend\ 80}}/32.2)*\mathbf{v})/\mathbf{t}$ = lbs

APPENDIX—Rope Selection (EEIPS Galvanized) (10 ropes per sheave)

AASHTO LRFD (EEIPS- Galvanized)											
c = Wire Rope Dia.(in)	**a** = Wire Rope Cross Section Area = $0.4\mathbf{c}^2$ (in^2)	**d** = Wire Strand Dia. (in)	$\mathbf{P_{ut}}$ = Min. Ult. Tensile Str. of 1 Rope (lbs)	**Vertical Lift Span Weight**							
		For 6x19 rope, d is approx. = c/16	(EEIPS) Galvanized	**10 Ropes/Sheave * 4 Sheaves = 40 Ropes**							
				$\mathbf{a_{Total}}$	$\mathbf{P_{DTL\ Tot}}$	$\mathbf{W_{S\ DTL}}$	$\mathbf{P_{Bend\ 72}}$	$\mathbf{P_{Bend\ 80}}$	$\mathbf{P_{Bend\ Tot}}$	$\mathbf{W_{S\ Bend\ 72}}$	$\mathbf{W_{S\ Bend\ 80}}$
3/4	0.2250	0.0469	51,800	9.00	259,000	**256,346**	158,594	142,734	460,444	**298,758**	**314,455**
7/8	0.3063	0.0547	70,200	12.25	351,000	**347,404**	215,864	194,277	624,000	**403,955**	**425,320**
1	0.4000	0.0625	91,100	16.00	455,500	**450,833**	281,944	253,750	809,778	**522,425**	**550,331**
1 1/8	0.5063	0.0703	114,500	20.25	572,500	**566,634**	356,836	321,152	1,017,778	**654,170**	**689,488**
1 1/4	0.6250	0.0781	140,800	25.00	704,000	**696,787**	440,538	396,484	1,251,556	**802,708**	**846,310**
1 3/8	0.7563	0.0859	169,200	30.25	846,000	**837,332**	533,051	479,746	1,504,000	**961,001**	**1,013,760**
1 1/2	0.9000	0.0938	199,800	36.00	999,000	**988,764**	634,375	570,938	1,776,000	**1,129,928**	**1,192,716**
1 5/8	1.0563	0.1016	232,200	42.25	1,161,000	**1,149,105**	744,510	670,059	2,064,000	**1,305,971**	**1,379,659**
1 3/4	1.2250	0.1094	270,000	49.00	1,350,000	**1,336,168**	863,455	777,109	2,400,000	**1,520,802**	**1,606,263**
1 7/8	1.4063	0.1172	307,800	56.25	1,539,000	**1,523,232**	991,211	892,090	2,736,000	**1,726,912**	**1,825,018**
2	1.6000	0.1250	349,200	64.00	1,746,000	**1,728,111**	1,127,778	1,015,000	3,104,000	**1,955,974**	**2,067,596**
2 1/8	1.8063	0.1328	390,600	72.25	1,953,000	**1,932,990**	1,273,155	1,145,840	3,472,000	**2,176,315**	**2,302,327**
2 1/4	2.0250	0.1406	435,600	81.00	2,178,000	**2,155,684**	1,427,344	1,284,609	3,872,000	**2,419,609**	**2,560,880**
2 3/8	2.2563	0.1484	484,200	90.25	2,421,000	**2,396,195**	1,590,343	1,431,309	4,304,000	**2,685,853**	**2,843,258**
2 1/2	2.5000	0.1563	531,000	100.00	2,655,000	**2,627,797**	1,762,153	1,585,938	4,720,000	**2,927,541**	**3,101,951**

E = Modulus of Elasticity = psi	**29,000,000**
v = Velocity of span = ft/sec	**1**
t = Braking Time = seconds	**3**

$\mathbf{P_{DTL\ Tot}}$ = Max. allowable Direct Tension Load (DTL) of the given rope system (all ropes on all sheaves) = 1/8 (12.5%) of the minimum ultimate tensile strength of the rope system. = lbs
$\mathbf{W_{S\ DTL}}$ = Max. weight of span for given rope system based on Direct Tension Load (DTL) = $\mathbf{P_{DTL\ Tot}}$ - $\mathbf{P_{B\ DTL}}$ = lbs
$\mathbf{P_{B\ DTL}}$ = Direct Tension Load in ropes due to braking = $((\mathbf{W_{S\ DTL}}/32.2)*\mathbf{v})/\mathbf{t}$ = lbs
$\mathbf{P_{Bend\ 72}}$ = Load due to bending on the rope system based on sheave diameter of 72**c** = $(0.7*\mathbf{E}*\mathbf{d}*\mathbf{a_{Total}})/(72*\mathbf{c})$= lbs
$\mathbf{P_{Bend\ 80}}$ = Load due to bending on the rope system based on sheave diameter of 80**c** = $(0.7*\mathbf{E}*\mathbf{d}*\mathbf{a_{Total}})/(80*\mathbf{c})$= lbs
$\mathbf{P_{Bend\ Tot}}$ = Max. allowable Total Load (DTL + bending) on the given rope system (all ropes on all sheaves) = 2/9 (22.2%) of the ultimate tensile strength of the rope system. = lbs
$\mathbf{W_{S\ Bend\ 72}}$ = Max. weight of span for given rope system based on Total Load (DTL + bending) and 72**c** dia. Sheave = $\mathbf{P_{bend\ Tot}}$ - ($\mathbf{P_{bend\ 72}}$ + $\mathbf{P_{brake\ Bend}}$) = lbs
$\mathbf{W_{S\ Bend\ 80}}$ = Max. weight of span for given rope system based on Total Load (DTL + bending) and 80**c** dia. Sheave = $\mathbf{P_{bend\ Tot}}$ - ($\mathbf{P_{bend\ 80}}$ + $\mathbf{P_{brake\ Bend}}$) = lbs
$\mathbf{P_{B\ Bend\ 72}}$ = Direct Tension Load in ropes due to braking using $\mathbf{W_{S\ Bend\ 72}}$ = $((\mathbf{W_{S\ Bend\ 72}}/32.2)*\mathbf{v})/\mathbf{t}$ = lbs
$\mathbf{P_{B\ Bend\ 80}}$ = Direct Tension Load in ropes due to braking using $\mathbf{W_{S\ Bend\ 80}}$ = $((\mathbf{W_{S\ Bend\ 80}}/32.2)*\mathbf{v})/\mathbf{t}$ = lbs

APPENDIX—Rope Selection (EEIPS Galvanized) (12 ropes per sheave)

AASHTO LRFD (EEIPS- Galvanized)											
c = Wire Rope Dia. (in)	**a** = Wire Rope Cross Section Area = $0.4\mathbf{c}^2$ (in^2)	**d** = Wire Strand Dia. (in)	$\mathbf{P_{ut}}$ = Min. Ult. Tensile Str. of 1 Rope (lbs)	**Vertical Lift Span Weight**							
		For 6x19 rope, d is approx. = c/16	(EEIPS) Galvanized	**12 Ropes/Sheave * 4 Sheaves = 48 Ropes**							
				$\mathbf{a_{Total}}$	$\mathbf{P_{DTL\ Tot}}$	$\mathbf{W_{S\ DTL}}$	$\mathbf{P_{Bend\ 72}}$	$\mathbf{P_{Bend\ 80}}$	$\mathbf{P_{Bend\ Tot}}$	$\mathbf{W_{S\ Bend\ 72}}$	$\mathbf{W_{S\ Bend\ 80}}$
3/4	0.2250	0.0469	51,800	10.80	310,800	**307,616**	190,313	171,281	552,533	**358,510**	**377,346**
7/8	0.3063	0.0547	70,200	14.70	421,200	**416,884**	259,036	233,133	748,800	**484,745**	**510,384**
1	0.4000	0.0625	91,100	19.20	546,600	**541,000**	338,333	304,500	971,733	**626,910**	**660,397**
1 1/8	0.5063	0.0703	114,500	24.30	687,000	**679,961**	428,203	385,383	1,221,333	**785,004**	**827,385**
1 1/4	0.6250	0.0781	140,800	30.00	844,800	**836,144**	528,646	475,781	1,501,867	**963,249**	**1,015,572**
1 3/8	0.7563	0.0859	169,200	36.30	1,015,200	**1,004,798**	639,661	575,695	1,804,800	**1,153,201**	**1,216,511**
1 1/2	0.9000	0.0938	199,800	43.20	1,198,800	**1,186,517**	761,250	685,125	2,131,200	**1,355,914**	**1,431,259**
1 5/8	1.0563	0.1016	232,200	50.70	1,393,200	**1,378,925**	893,411	804,070	2,476,800	**1,567,165**	**1,655,591**
1 3/4	1.2250	0.1094	270,000	58.80	1,620,000	**1,603,402**	1,036,146	932,531	2,880,000	**1,824,962**	**1,927,515**
1 7/8	1.4063	0.1172	307,800	67.50	1,846,800	**1,827,878**	1,189,453	1,070,508	3,283,200	**2,072,295**	**2,190,021**
2	1.6000	0.1250	349,200	76.80	2,095,200	**2,073,733**	1,353,333	1,218,000	3,724,800	**2,347,169**	**2,481,116**
2 1/8	1.8063	0.1328	390,600	86.70	2,343,600	**2,319,588**	1,527,786	1,375,008	4,166,400	**2,611,579**	**2,762,792**
2 1/4	2.0250	0.1406	435,600	97.20	2,613,600	**2,586,821**	1,712,813	1,541,531	4,646,400	**2,903,530**	**3,073,057**
2 3/8	2.2563	0.1484	484,200	108.30	2,905,200	**2,875,434**	1,908,411	1,717,570	5,164,800	**3,223,024**	**3,411,910**
2 1/2	2.5000	0.1563	531,000	120.00	3,186,000	**3,153,357**	2,114,583	1,903,125	5,664,000	**3,513,050**	**3,722,341**

E = Modulus of Elasticity = psi	**29,000,000**
v = Velocity of span = ft/sec	**1**
t = Braking Time = seconds	**3**

$\mathbf{P_{DTL\ Tot}}$ = Max. allowable Direct Tension Load (DTL) of the given rope system (all ropes on all sheaves) = 1/8 (12.5%) of the minimum ultimate tensile strength of the rope system. = lbs
$\mathbf{W_{S\ DTL}}$ = Max. weight of span for given rope system based on Direct Tension Load (DTL) = $\mathbf{P_{DTL\ Tot}}$ - $\mathbf{P_{B\ DTL}}$ = lbs
$\mathbf{P_{B\ DTL}}$ = Direct Tension Load in ropes due to braking = $((\mathbf{W_{S\ DTL}}/32.2)*\mathbf{v})/\mathbf{t}$ = lbs
$\mathbf{P_{Bend\ 72}}$ = Load due to bending on the rope system based on sheave diameter of 72**c** = $(0.7*\mathbf{E}*\mathbf{d}*\mathbf{a_{Total}})/(72*\mathbf{c})$= lbs
$\mathbf{P_{Bend\ 80}}$ = Load due to bending on the rope system based on sheave diameter of 80**c** = $(0.7*\mathbf{E}*\mathbf{d}*\mathbf{a_{Total}})/(80*\mathbf{c})$= lbs
$\mathbf{P_{Bend\ Tot}}$ = Max. allowable Total Load (DTL + bending) on the given rope system (all ropes on all sheaves) = 2/9 (22.2%) of the ultimate tensile strength of the rope system. = lbs
$\mathbf{W_{S\ Bend\ 72}}$ = Max. weight of span for given rope system based on Total Load (DTL + bending) and 72**c** dia. Sheave = $\mathbf{P_{bend\ Tot}}$ - ($\mathbf{P_{bend\ 72}}$ + $\mathbf{P_{brake\ Bend}}$) = lbs
$\mathbf{W_{S\ Bend\ 80}}$ = Max. weight of span for given rope system based on Total Load (DTL + bending) and 80**c** dia. Sheave = $\mathbf{P_{bend\ Tot}}$ - ($\mathbf{P_{bend\ 80}}$ + $\mathbf{P_{brake\ Bend}}$) = lbs
$\mathbf{P_{B\ Bend\ 72}}$ = Direct Tension Load in ropes due to braking using $\mathbf{W_{S\ Bend\ 72}}$ = $((\mathbf{W_{S\ Bend\ 72}}/32.2)*\mathbf{v})/\mathbf{t}$ = lbs
$\mathbf{P_{B\ Bend\ 80}}$ = Direct Tension Load in ropes due to braking using $\mathbf{W_{S\ Bend\ 80}}$ = $((\mathbf{W_{S\ Bend\ 80}}/32.2)*\mathbf{v})/\mathbf{t}$ = lbs

CHAPTER 7—HYDRAULIC DESIGN

TABLE OF CONTENTS

7.1—GENERAL REQUIREMENTS 1
7.1.1—Design Objectives 1
7.2—DEFINITIONS 1
7.4—DESIGN LOADING CRITERIA 2
7.4.2—Machinery Design Criteria and Limit States 2
7.4.3—Hydraulic Cylinder Connections 3
7.5—COMPONENTS 6
7.5.1—Hydraulic Fluid 6
7.5.2—Electric Motors 6
7.5.2.1—General 6
7.5.2.2—Open Loop Systems 8
7.5.2.3—Closed Loop Systems 8
7.5.5—Pumps 8
7.5.5.1—Main Drive System Pumps 8
7.5.5.2—Auxiliary Pumps 8
7.5.6—Control Valves 9
7.5.6.2—Directional and Speed Control Valves 9
7.5.8—Fluid Reservoirs 9
7.5.10—Filters 9
7.5.11—Hydraulic Motors 9
7.5.11.1—Hydraulic Motors for Span Operation 9
7.5.12—Hydraulic Cylinders 10
7.5.12.1—Cylinders for Span Operation 10
7.5.12.2—Cylinders for Auxiliary Devices 10
7.6—GENERAL DESIGN PROVISIONS 10
7.6.9—Fluid Conductors 10
7.6.9.2—Pipe and Pipe Fittings 10
7.8—FABRICATION AND CONSTRUCTION 10
7.8.4.2—Shop Tests 10
7.8.4.2.1—Power Units 11

7.8.4.2.2—Hydraulic Cylinders....11
7.9—MATERIALS....11
7.9.1.2—Tubing and Tube Fittings....11
7.9.1.3—Hose and Hose Fittings....11
7.9.1.4—Quick Disconnects....12
7.9.1.5—Manifolds....12
REFERENCES....13
APPENDIX—EXAMPLE SPAN DRIVE MACHINERY LAYOUT FOR HYDRAULIC SWING SPAN BRIDGE....14
Figure A7-1—Example Span Drive Machinery Layout For Hydraulic Swing Span Bridge....14
APPENDIX—EXAMPLE HYDRAULIC POWER UNIT (HPU) FOR SWING SPAN BRIDGE....15
Figure B7-1—Example Hydraulic Power Unit (HPU) For Swing Span Bridge....15

LIST OF FIGURES

Figure 7.4.3-1 — Example Span Drive Hydraulic Cylinder and Connections for Swing Span Bridges 3

Figure 7.4.3-2 — Detail A – Blind End Bearing Assembly 4

Figure 7.4.3-3 — Detail B – Rod End Bearing Assembly 5

Figure A7-1—— Example Span Drive Machinery Layout For Hydraulic Swing Span Bridge 14

Figure B7-1—— Example Hydraulic Power Unit (HPU) For Swing Span Bridge 15

7.1—GENERAL REQUIREMENTS

7.1.1—Design Objectives

The following shall supplement *A7.1.1*.

This chapter contains information and criteria related to the design of movable bridge projects. It sets forth the basic Louisiana Department of Transportation and Development (LADOTD) design criteria exceptions and/or additions to those specified in the latest edition of *AASHTO LRFD Movable Highway Bridge Design Specifications*, including all interim revisions.

Construction specifications shall be the latest edition of the *Louisiana Standard Specifications for Roads and Bridges (Standard Specifications)*. *Standard Specifications* are subject to amendment whenever necessary by supplemental specifications and special provisions to specific contracts. In the absence of specific information in the *Standard Specifications*, follow the *AASHTO LRFD Bridge Construction Specifications*.

7.2—DEFINITIONS

The following shall supplement *A7.2*.

Pipe Spool–A prefabricated section of a piping system that includes the pipe, fittings and flanges that are pre-assembled in the fabrication facility and then transported to the field.

Positive Displacement Pump—A hydraulic pump that has an expanding cavity on the suction side and a decreasing cavity on the discharge side. Liquid flows into the pump as the cavity on the suction side expands and the liquid flows out of the discharge as the cavity collapses. The volume is constant, given each cycle of operation.

Fixed Displacement Pump—A hydraulic pump that cannot be adjusted to increase or decrease the amount of liquid that is moved in a one pump cycle.

Variable Displacement Pump—A hydraulic pump in which the displacement or amount of fluid pumped per revolution of the pump's input shaft can be varied while the pump is running.

Pressure-Compensated Pump—A hydraulic pump that has an adjustable pressure compensator that will decrease the pump’s output to 0 gpm when the system pressure equals the pressure setting of the compensator.

The following definitions shall replace those in *A7.2*.

Design Pressure (DP)—The established criteria for maximum working pressure allowed by design. This is the pressure value which is also known as *Maximum Allowable Working Pressure* (*MAWP*). MAWP of a vessel is to be the pressure that will create stresses in the shell that equal the allowable stresses

given in the material section of the code. The piping code has similar criteria, but it calls this the Design Pressure (DP); therefore, DP is the allowable pressure given by the governing codes. In this case, it is 3,000 psi for the piping and fittings, etc., 5,000 psi for hoses and hose fittings, and higher for the cylinders.

Maximum Pressure (MP)—The highest pressure at which the system or part of the system is intended to operate in a steady state of conditions without amplification due to impact; a physically established value – controlled and limited by physical devices such as relief valves. This is the pressure for which the system relief valve is set (approximately 2,600 psi). This pressure is, for example, the pressure where the holding valves are set. When the span is pushed by a barge, this will cause the holding valves to open and relieve the system.

Normal Pressure (NP)—The pressure at which the system or part of the system is intended to operate in a steady state of conditions without amplification due to impact, as established by the design setting of a relief valve. NP differs from MP in that it is established by setting an adjustable relief valve to a specific pressure lower than the maximum pressure setting. For example, the pressure for the counterbalance valve setting is 1,500 psi. If a non-adjustable relief valve is used, the normal working pressure and maximum working pressure will be the same. For example, the end wedge system has a relief valve set at 2,600 psi. This pressure is the NP and the MP.

7.4—DESIGN LOADING CRITERIA

7.4.2—Machinery Design Criteria and Limit States

The following shall replace the last paragraph in *A7.4.2*.

Seismic design shall not be required for hydraulic machinery in Louisiana.

The following shall supplement *A7.4.2*.

For hydraulic swing spans, the span drive system located between the pump and valve manifold should be designed, sized, and proportioned such that it can operate the span within the normal operating loads described in *A5.4.1*, *A5.4.2*, *A5.4.3*, *A5.4.4*, *D5.4.1*, *D5.4.2*, *D5.4.3*, and *D5.4.4*, and with NP between 1,200 psi and 1,500 psi. The relief valves shall be set at this NP to prevent the system pressure rising.

Once this is established, the span drive hydraulic system shall also fulfill the holding requirements of *A5.5* and *D5.5*, with a pressure below 3,000 psi, but above the NP (usually about 2,500 psi); therefore, a second set of relief valves, located at or on the end lifts, shall be set at the maximum pressure (MP) and shall come into play only during a holding situation.

7.4.3—Hydraulic Cylinder Connections

The following figure shall supplement *A7.4.3*.

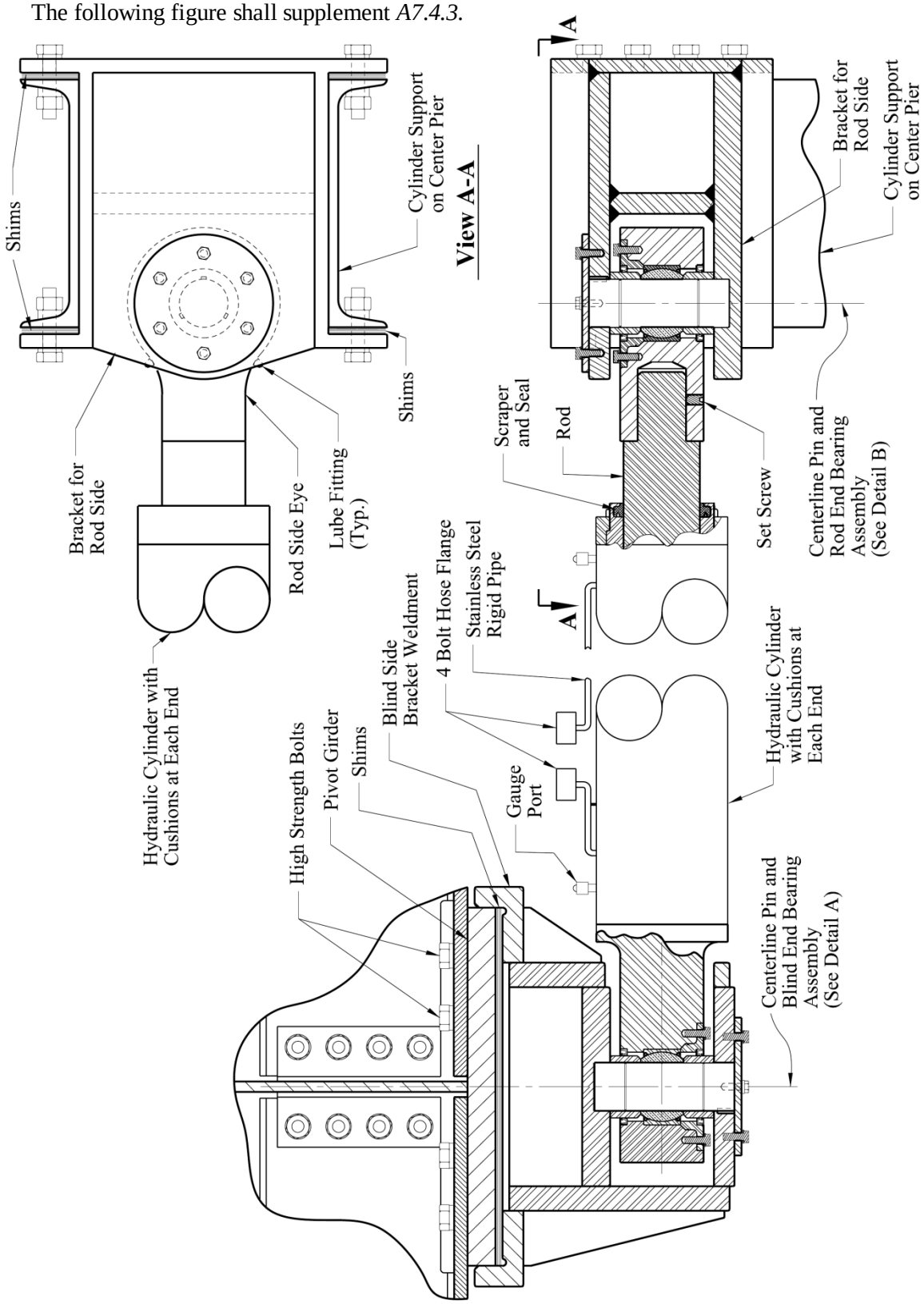

Example Span Drive Hydraulic Cylinder and Connections for Swing Span Bridges

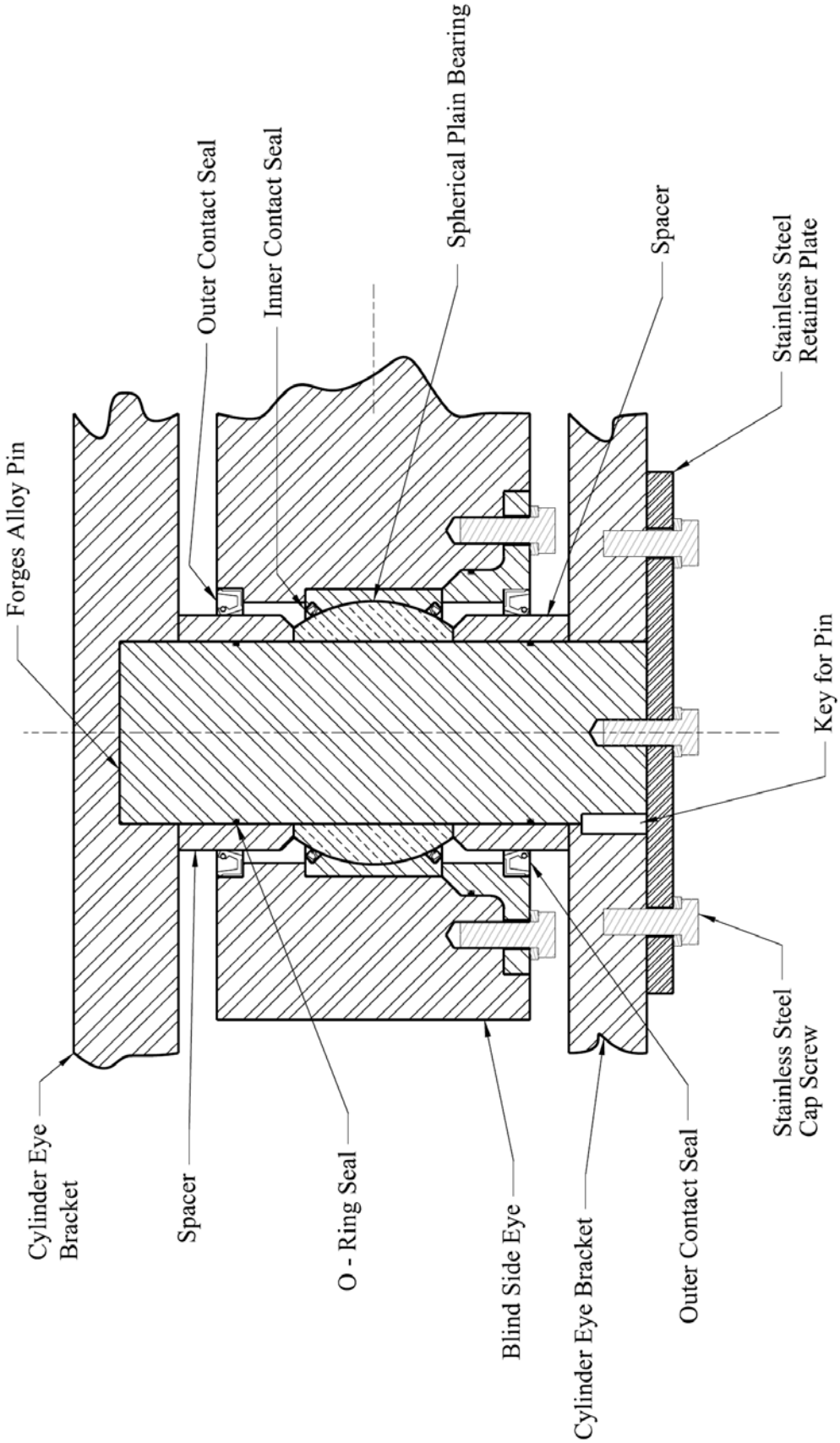

Detail A – Blind End Bearing Assembly

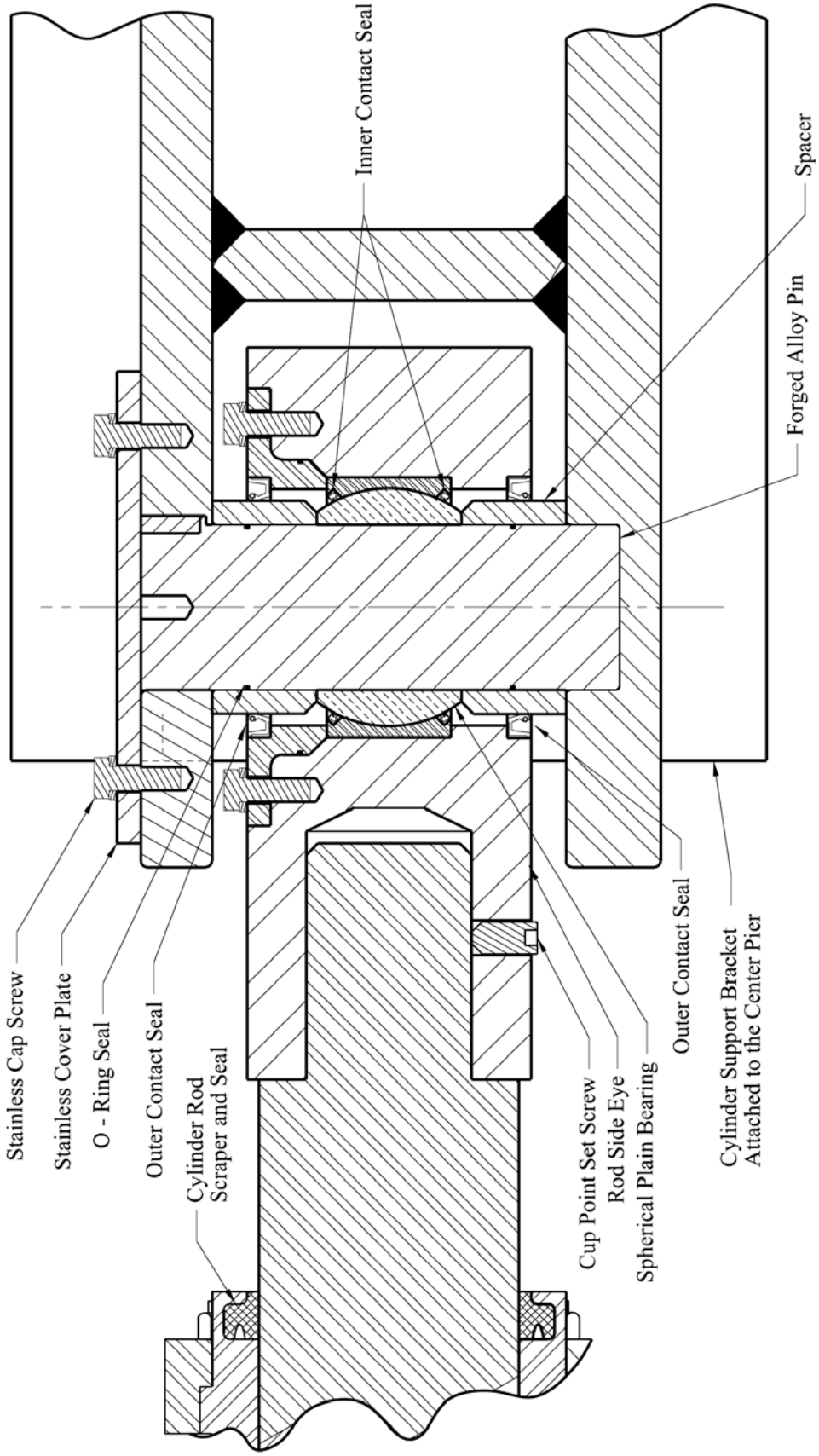

Detail B – Rod End Bearing Assembly

7.5—COMPONENTS

7.5.1—Hydraulic Fluid

The following shall supplement *A7.5.1*.

Readily biodegradable hydraulic fluids are not recommended for movable bridges in Louisiana.

C.7.5.1

Biodegradable hydraulic fluids have a shorter life than conventional hydraulic fluids. It should be assumed that the hydraulic fluid will not be replaced for 10 to 20 years.

The viscosity of a normal oil can be 10 times or higher at 32 degrees Fahrenheit than at 75 degrees Fahrenheit. Therefore, a thermally stable fluid should be considered by the designer.

7.5.2—Electric Motors

7.5.2.1—General

The following shall replace the 2nd paragraph in *A7.5.2.1*.

All hydraulic pump motors used for driving hydraulic pumping equipment shall be specified as: 1,800 nominal rpm, 240 or 480 VAC, TEFC or TENV, squirrel-cage induction motors, heavy-duty cast-iron frame, an oversized rotatable junction box, re-greaseable bearings, premium shaft seals, class F insulation, epoxy-coated winding treatment, copper windings, stainless-steel hardware, and a stainless-steel or aluminum nameplate. They shall be foot-mounted and have all joints gasketed, sealed, and shall be painted on the inside and outside with an epoxy paint system suitable for harsh environments.

Electric squirrel-cage induction motors of 480 volts and larger shall meet or exceed the IEEE-841 standard for severe duty applications.

Electric squirrel-cage induction motors of 1 horsepower to 200 horsepower shall include:

- NEMA Continuous Duty
- 1,800 rpm at synchronous speed
- 3 phase, 60 hertz
- NEMA design B
- NEMA TEFC
- Enclosure meets or exceeds IEC IP54
- Epoxy paint system
- Zinc-plated or stainless-steel hardware

- Cast-iron frame, fan cover, and conduit box
- Class F insulation according to NEMA MG1-2006, part 31.
- 1.15 service factor
- NEMA Class B temperature rise at 1.0 service factor
- Re-greasable double-shielded bearings on output and fan shafts
- Automatically resetting thermal overloads
- Stainless-steel nameplate

Electric squirrel-cage induction motors less than 1 horsepower shall include:

- NEMA continuous duty
- 1,800 rpm at synchronous speed
- 3 phase, 60 hertz
- NEMA design B
- NEMA premium efficiency
- NEMA TEFC or TENV
- Epoxy paint system
- Cast-iron frame, fan cover, and conduit box
- Class F insulation according to NEMA MG1-2006, part 31.
- 1.15 service factor
- Ball bearings
- Automatically resetting thermal overloads
- Stainless-steel nameplate

Horsepower, rpm, voltage, phase, and hertz, shall be shown on the plans.

The following shall supplement *A7.5.2.1*.

Hydraulic Pump motors shall be sized and rated for continuous operation at 110 percent of the selected pump capacity when operating at the pump's highest relief valve setting while pumping the hydraulic oil at 32° Fahrenheit.

For variable capacity pumps, the driver shall be sized and rated for continuous operation at the lesser of either: 1) the maximum pump capacity, 2) 100 percent capacity at the system pressure valve setting at NP, or 3) design flow at the pump pressure valve setting and the maximum system relief valve setting.

7.5.2.2—Open Loop Systems

The following shall supplement *A7.5.2.2*.

For open-loop variable-volume pressure-compensated pumps, the 20 percent uplift will be checked for satisfactory performance against the full volume capacity of the installed pump and the resultant developed head or system relief pressure setting.

7.5.2.3—Closed Loop Systems

The following shall supplement *A7.5.2.3*.

For hydraulic cylinder swing spans, the cylinder arrangement and geometry requires a boost pump to make up the flow differential between the pump output and the return.

7.5.5—Pumps

7.5.5.1—Main Drive System Pumps

The following shall supplement *A7.5.5.1*.

Span drive hydraulic pumps used to actuate cylinders shall be closed or open loop, axial piston type with swash plate design. They shall have a manual control lever for direction and flow control. They shall have an integral boost pump with a cold start valve, and integrated high-pressure relief and make-up valves. They shall be rated for continuous duty at 3,000 psi minimum.

7.5.5.2—Auxiliary Pumps

The following shall supplement *A7.5.5.2*.

Center wedge and end roller system hydraulic pumps shall be an open-loop, fixed displacement, balanced, pressure-compensated vane pump with SAE 4-bolt flange ports and shall be rated for continuous duty at 3,000 psi.

C7.5.2.2

The objective is to provide the maximum practical horsepower for the motor frame being used that can/will handle possible future increased volume rates at design pressures.

7.5.6—Control Valves

7.5.6.2—Directional and Speed Control Valves

The following shall supplement *A7.5.6.2*.

Maximum allowed system pressure drop, if used to provide span rotation, shall be 13 percent of pump internal relief valve setting or 15 percent of system relief valve setting when motor is operating at 100 percent design flow.

7.5.8—Fluid Reservoirs

The following shall supplement *A7.5.8*.

Hydraulic fluid reservoirs may serve as the platform for all of the components which serve as the hydraulic power unit (HPU).

Reservoir volume shall be shown on the plans.

C7.5.8

Although *AASHTO LRFD Movable Highway Bridge Design Specifications*, 2007 require the reservoir volume to be not less than 2.5 times the flow rate, the volume may be reduced if the heat buildup is determined not to be a problem and there is enough depth of fluid to completely submerge the suction strainer throughout the operation cycle of the bridge.

7.5.10—Filters

The following shall replace the 3rd paragraph in *A7.5.10*.

"Oversized" suction strainers with a bypass shall be permitted on the hydraulic power unit. These strainers shall be sized large enough as not to have more than a 5 psi pressure differential between the tank and the inlet at full pump capacity flow.

All filters shall have external indicators for bypass operation.

7.5.11—Hydraulic Motors

7.5.11.1—Hydraulic Motors for Span Operation

The following shall supplement *A7.5.11.1*.

The hydraulic pressure release system provided to the hydraulic span rotation motor shall be electrical fail safe design, but shall incorporate an adjustable minimum 10-second accumulator reservoir supply to allow for dynamic braking

prior to full stop by the hydraulic motor brake unit.

For hydraulic braking, a pressure valve spill back shall be built into the hydraulic motor head. This spill back shall be rated at a DP of 3,000 psi.

7.5.12—Hydraulic Cylinders

7.5.12.1—Cylinders for Span Operation

The following shall supplement *A7.5.12.1*.

Span drive cylinders on a swing span bridge shall be designed such that they can be mounted horizontally without an intermediate support. This will require a stop tube. Span drive cylinders shall also be cushioned at both ends. Cushions shall be designed to stop the span even if the span is driving at full speed and is being driven by the HPU without exceeding 5,000 psi in the cushions.

7.5.12.2—Cylinders for Auxiliary Devices

The following shall supplement *A7.5.12.2*.

Wedge and lock cylinders shall be designed for hard stop/lock positioning when fully driven & fully retracted. Cushions are not needed for these cylinders.

7.6—GENERAL DESIGN PROVISIONS

7.6.9—Fluid Conductors

7.6.9.2—Pipe and Pipe Fittings

The following shall supplement *A7.6.9.2*.

Socket weld fittings for pipe shall be specified.

SAE code 61 or 62 4-bolt flange fittings with O-ring seals shall be specified for pipes.

7.8—FABRICATION AND CONSTRUCTION

7.8.4.2—Shop Tests

The following shall supplement *A7.8.4.2*.

Shop fabricated pipe spools will be shop hydro-tested to 1.5 times the system design pressure or 1.5 times the component maximum

pressure rating, whichever is greater.

Shop assemblies of mechanical items (pumps, valves, manifold, etc.) shall be shipped as one unit and shall be shop hydro-tested to 1.5 times design pressure.

7.8.4.2.1—Power Units

C7.8.4.2.1

The hydraulic system up to the hydraulic cylinders or motors is limited to the pressure valve settings (approximately 90 percent of the MP or about 2,700 psi).

The internal spill back at the motor is usually set at 80 percent or 2,400 psi.

7.8.4.2.2—Hydraulic Cylinders

C7.8.4.2.2

Hydraulic cylinders will go to the system relief valve setting, which is less than the internal pump spillback setting.

7.9—MATERIALS

7.9.1.2—Tubing and Tube Fittings

The following shall supplement *A7.9.1.2*.

Tubing on pressure lines integral to the power unit (everything on the HPU side of the manifold) may be used if the tubing is properly sized for flow, is pressure-rating rated (3,000 psi), and utilizes O-ring seals at all connections/fittings.

Tubing on low pressure (tank) lines that are part of the HPU can use compression fittings and can be rated for low pressure service (1,000 psi).

7.9.1.3—Hose and Hose Fittings

The following shall supplement *A7.9.1.3*.

SAE code 62 4-bolt flange fittings with O-ring seals shall be specified for all hose connections. For the hose connections associated with auxiliary systems, such as end lift cylinders and center wedge cylinders, compression fittings with O-ring seals may be used.

7.9.1.4—Quick Disconnects

The following shall supplement *A7.9.1.4*.

Quick disconnects shall only be used to connect auxiliary power units (see *A7.6.9.5*). Permanent pressure gauges shall be installed with a gauge cock and snubber. Stainless-steel quick-disconnect gauge ports with "no mess" check valves and protective caps attached by chains should also be provided.

7.9.1.5—Manifolds

The following shall replace *A7.9.1.5*.

Manifold material for hydraulic valves shall be specified as type 304 or 316 stainless steel, or carbon steel possessing the necessary strength for the system pressure, including safety factors. Carbon-steel manifolds shall be painted for protection, per the requirements of machinery steel paint system. The pressure drop across the manifold shall not be greater than 75 psi each way at full port flow.

REFERENCES

AASHTO LRFD Bridge Construction Specifications, Latest Edition, American Association of State Highway and Transportation Officials, Washington D.C.

AASHTO LRFD Movable Highway Bridge Design Specifications, Latest Edition, American Association of State Highway and Transportation Officials, Washington D.C.

AASHTO Standard Specifications for Movable Highway Bridges, Latest Edition, MHB 5, American Association of State Highway and Transportation Officials, Washington D.C.

Louisiana Standard Specifications for Roads and Bridges, Latest Edition, State of Louisiana Department of Transportation and Development, Baton Rouge, LA

Applicable Codes and Standards:

IEC—International Electrotechnical Commission

IEEE—Institute of Electrical and Electronics Engineers

NEMA—National Electrical Manufacturers Association

SAE—SAE International (Formally the Society of Automotive Engineers)

APPENDIX—EXAMPLE SPAN DRIVE MACHINERY LAYOUT FOR HYDRAULIC SWING SPAN BRIDGE

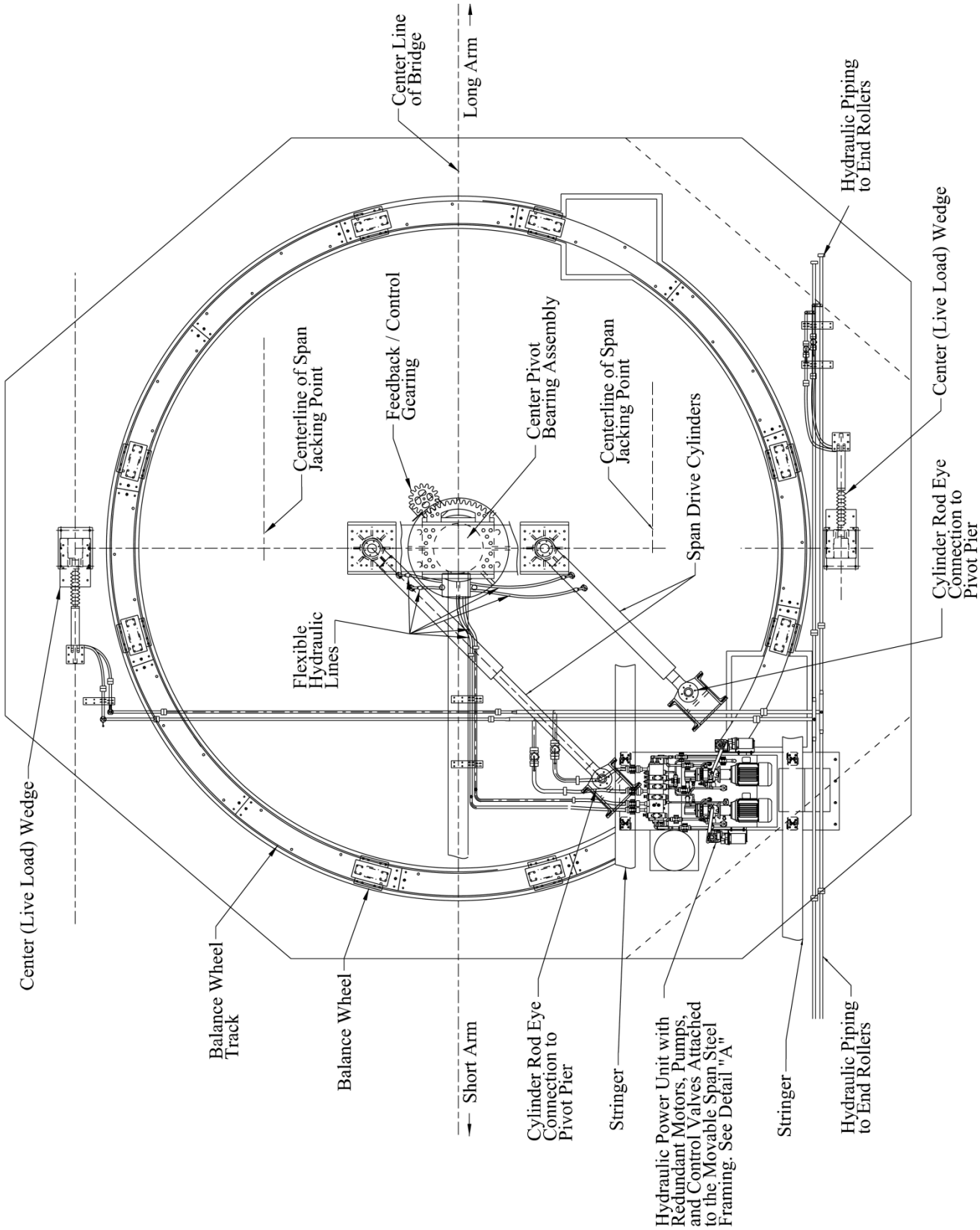

Figure A7-1—Example Span Drive Machinery Layout For Hydraulic Swing Span Bridge

APPENDIX—EXAMPLE HYDRAULIC POWER UNIT (HPU) FOR SWING SPAN BRIDGE

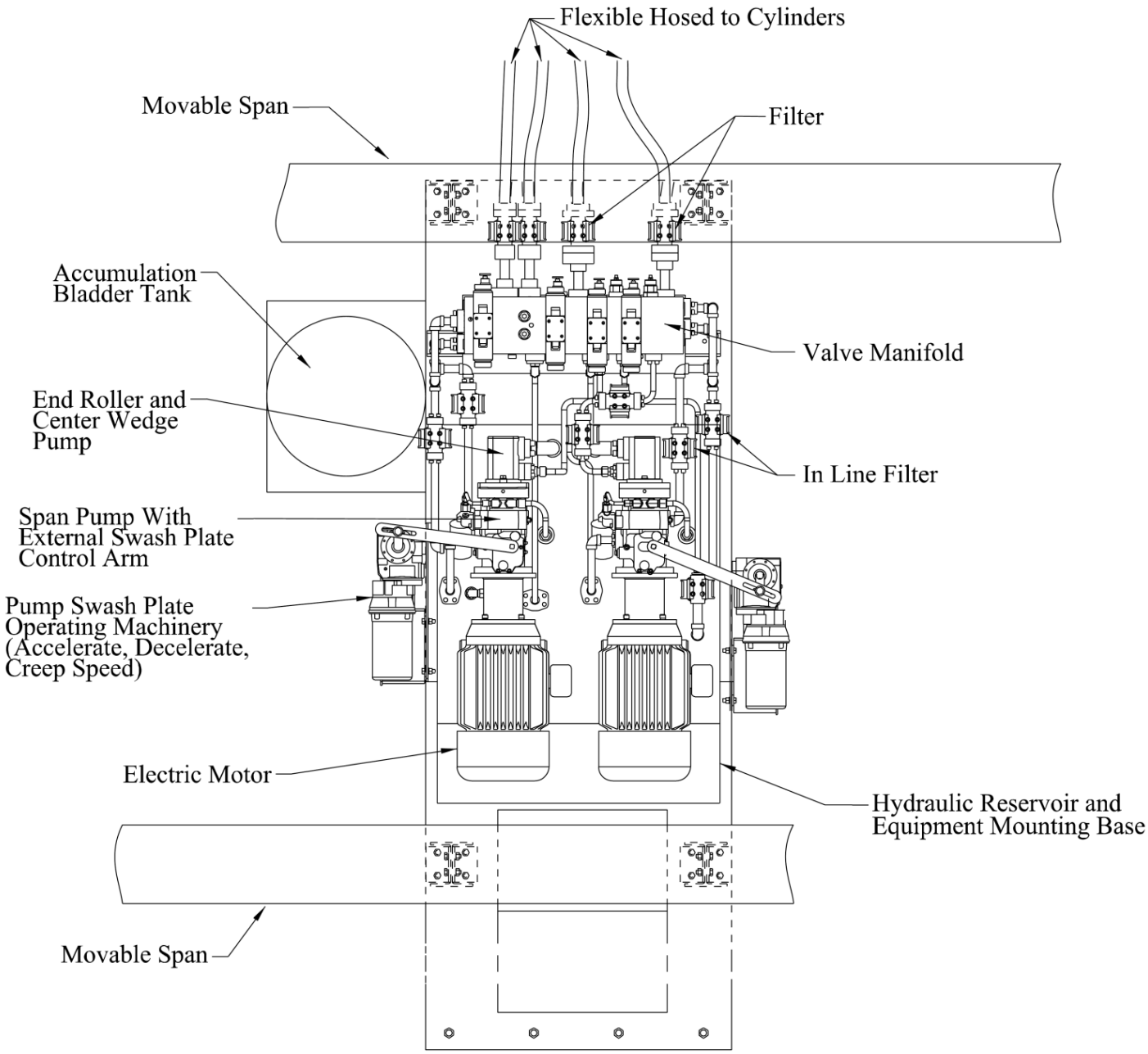

Figure B7-1—Example Hydraulic Power Unit (HPU) For Swing Span Bridge

CHAPTER 8—ELECTRICAL DESIGN

TABLE OF CONTENTS

8.1—GENERAL DESIGN REQUIREMENTS 1
8.1.1—Scope, Codes, and Standards 1
Scope of Work 2
Plans and Specifications 2
Equipment and Materials 2
Existing Conditions 3
Coordination 3
Verification 3
Warranties and Guaranties 4
Electrical, Operation & Maintenance Manuals 4
Record As-Built Drawings 8
Codes and Fees 8
Quantities 9
Tests 9
Underground Utilities 10
8.1.2—Safety 10
8.2—DEFINITIONS 12
8.3—ELECTRIC SUPPLY AND POWER DISTRIBUTION 13
8.3.1—Commercial Electric Service 13
8.3.2—Circuit Breakers 13
8.3.3—Fuses 14
8.3.3.1—Fuses Rated 20 Amps and Higher 14
8.3.3.2—Fuses Rated Below 20 Amps 14
8.3.4—Disconnect Switches 14
8.3.6—High Voltage Switch Gear (600 Volts and Above) 15
8.3.8—Transfer Switches 15
8.3.8.2—Automatic Transfer Switches 15
8.3.8.3—Non-Automatic Transfer Switches 17
8.3.9—Engine Generator Sets 18
8.3.9.1—General 19
8.3.9.3—Generator Instruments and Controls 20

8.3.9.4—Supplemental Generator Loading 21
8.4—ELECTRICAL CONTROL SYSTEMS....21
8.4.1—Operating Sequence and Interlocking Requirements 21
8.4.1.1—Bascule Bridges, Single Leaf, and Double Parallel Leaf....21
8.4.1.3—Vertical Lift Bridges 21
8.4.1.4—Swing Spans 24
8.4.2—Control Logic....26
8.4.2.1—General 26
8.4.2.3—Programmable Logic Controller~~s~~ (PLC) 26
8.4.2.6—Normal Stop....27
8.4.3—Bypass Switches....27
8.4.4—Limit Switches 27
8.4.4.2—Lever Arm Limit Switches 27
8.4.4.3—Rotary Cam Limit Switches 27
8.4.5—Position Indicator Systems 27
8.4.5.1—General 27
8.4.5.2—Synchronous Systems....28
8.4.6—Control Console 28
8.4.6.3—Control Console Construction 28
8.5—ELECTRIC MOTORS....29
8.5.1—General Requirements....29
8.5.2—Application-Specific Criteria....29
8.5.2.2—Span Drive Motors....29
8.5.2.2.2—AC Wound Rotor Motors....29
8.5.2.3—Skew Control or Synchronizing Motors....32
8.6—ELECTRIC MOTOR CONTROLS....32
8.6.1—Speed Control of Span Drive Motors....32
8.6.1.2—Stepped Resistance Control....32
8.6.1.3—SCR (AC Thyristor) speed control....32
8.6.3—Resistors 32
8.6.5—Motor Control Centers....33
8.6.6—Contactors....33
8.7—ELECTRICALLY OPERATED BRAKES....34
8.8—CONTROL CABINETS....34
8.9—ELECTRICAL CONDUCTORS....34
8.9.1—General Requirements....34

8.9.2—Splicing and Tapping Conductors....35
8.9.3—Labeling and Identifying Conductors....36
8.9.7—Submarine Cables....36
8.9.7.1—Conductors....36
8.9.7.2—Cable Construction....37
8.9.7.3—Inner and Outer Jacket Material....37
8.9.7.4—Cable Armor Wire....37
8.9.7.5—Testing....38
8.10—CONDUITS, WIREWAYS, BOXES AND CABINETS....38
8.10.1—Conduit, General Requirements....38
8.10.1.1—Rigid Steel Conduit....39
8.10.1.2—Rigid Aluminum Conduit....39
8.10.1.3—Electrical Metallic Tubing (EMT)....40
8.10.1.4—Rigid Nonmetallic Conduit....40
8.10.1.5—Flexible Metal Conduit....41
8.10.2—Wire ways....42
8.10.3—Junction Boxes and Terminal Cabinets....42
8.11—SERVICE LIGHTS AND RECEPTACLES....42
8.12—GROUNDING....43
8.12.1—General....43
8.12.2—Equipment Grounding....43
8.12.3—Structure Grounding....43
8.13—LIGHTNING PROTECTION....44
SUBMITTALS....45
REFERENCES....47
APPENDIX—REQUIRED ELECTRICAL PLAN SHEETS....49
REQUIRED ELECTRICAL PLAN SHEETS GENERAL (ALL BRIDGE TYPES)....49
E0 Sheets: Electrical Requirements & Specifications....49
Electrical General Requirements Sheet....49
Electrical Specifications Sheet....49
E1 Sheets: General Plan Layouts & Operator's House Layout....49
General Plan Layouts....49
Operator's House Layout....49
E2 Sheets: Riser Diagram, Conduit and Wire Schedule....50
Riser Diagram....50
Conduit and Wire Schedule....50

E3 Sheets: 3 Phase Power, 1 Phase Power 50
Three (3) Phase Power Schematic 50
Single (1) Phase Power Schematic 50
E4 Sheets: Control Schematic, Indication Light Schematic 51
Control Schematic 51
Indication Light Schematic 51
E5 Sheets: Details Sheets 51
E6 Sheets: Bridge Equipment List 52
E7 Sheets: Switchboard Detail 52
E8 Sheets: Switchboard Equipment List 53
E9 Sheets: Control Desk Details 53
E10 Sheets: Control Desk Equipment List 54
REQUIRED ELECTRICAL PLAN SHEETS FOR SWING SPAN BRIDGES 55
E1 Sheets: Center Pier Layout 55
E5 Sheets: Detail Sheets 55
REQUIRED ELECTRICAL PLAN SHEETS FOR VERTICAL LIFT BRIDGES 56
E1 Sheets: Machine Deck Layout 56
E4 Sheets: Selsyn Schematics 56
E5 Sheets: Tower Stair Light Mounting 56
E6 Sheets: Lightning Protection System Additional Material Specifications 56
REQUIRED ELECTRICAL PLAN SHEETS FOR BASCULE BRIDGES 58
E1 Sheets: Bascule leaf Pivoting Pier Layout & Bascule leaf Pivoting Pier Profiles 58
Bascule leaf Pivoting Pier Layout 58
Bascule leaf Pivoting Pier Profiles 58
REQUIRED ELECTRICAL PLAN SHEETS FOR PONTOON BRIDGES 59

8.1—GENERAL DESIGN REQUIREMENTS

8.1.1—Scope, Codes, and Standards

C8.1.1

The following shall supplement *A8.1.1*.

This chapter contains information and criteria related to the design of movable bridge projects. It sets forth the basic LADOTD design criteria exceptions and/or additions to those specified in *AASHTO LRFD Movable Highway Bridge Design Specifications*, Second Edition, 2007, including all interim revisions.

Construction specifications shall be the latest edition of *Louisiana Standard Specifications for Roads and Bridges (Standard Specifications)*. *Standard Specifications* are subject to amendment whenever necessary by supplemental specifications and special provisions to specific contracts. In the absence of specific information in *Standard Specifications*, follow the latest edition of *AASHTO LRFD Bridge Construction Specifications*.

The electrical design engineer shall follow all applicable codes when designing the movable bridge electrical system and shall get approval from the Bridge Design Engineer Administrator prior to final design for exceptions. All approved exceptions shall be explicitly stated in the plans.

All of the control logic shall be depicted on one sheet, unless otherwise approved by the Bridge Design Engineer Administrator. If the control logic cannot feasibly be put onto a single sheet, the Designer shall put the overall control philosophy on a single sheet.

Power and controls shall be separated on movable bridge electrical systems. No conductors designated for controls shall be routed through the same conduits or terminated in the same box as conductors designated for power transmission.

An insulated partition may be used for instances where available space does not permit two junction boxes (one for power and one for controls).

All electrical equipment supports shall be suitable for the environment and shall be capable of supporting a person standing on the equipment, or 5 times the actual load of the equipment, whichever is greater, along with any additional loads likely to be encountered.

All mounting hardware shall be of marine-duty stainless steel.

The Consultant shall obtain an example of the

final plans from Bridge Design Engineer Administrator. Refer to Appendices for required electrical plan sheets and sheet organization.

The following general requirements shall be stated on the contract drawings.

Scope of Work

The work covered by this section shall include furnishing, installing, connecting, and placing into satisfactory operating condition the electrical system as indicated in the plans, specifications, or as directed by the Project Engineer. The work shall be in accordance with plan details and specifications and the Contractor shall make any necessary modifications or fabrications required for a complete, operational, and safe system. The contractor performing the work is assumed to be skilled in the trade, capable of understanding the intent of the plans and specifications, and constructing the electrical system in accordance with the best practice of the trade.

Any modifications or changes to the electrical plans shall be submitted to the Project Engineer for approval by the Bridge Design Engineer Administrator prior to any work being performed.

Plans and Specifications

All work shall be performed in accordance with the latest edition of *Louisiana Standard Specifications for Roads and Bridges*, hereinafter called *Standard Specifications*, and the latest edition of the *AASHTO LRFD Standard Specifications for Movable Highway Bridges* and any interim revisions thereafter.

Equipment and Materials

The Contractor shall submit brochures and installation instructions for all electrical equipment, materials, and apparatus to be furnished on the project to the Bridge Design Engineer Administrator.

Equipment and material shall be suitable for the intended use and shall be furnished with all necessary hardware and components. The

Contractor shall be responsible for all modifications or fabrications necessary for proper installation and operation of the equipment. All equipment and material shall be new and of best quality. All like equipment and materials shall be of the same manufacturer, unless indicated otherwise in the plans. Reference to a specific manufacturer's name and/or catalog number is intended to denote the quality of the equipment or material and not to specifically exclude other acceptable products. All parts/equipment specified on the plans shall be considered to be followed by the phrase "Or Approved Equal" unless otherwise specified on the plans. Descriptive specifications, plans, and system compatibility shall govern over specified manufacturer's names, model numbers, or catalog numbers. The Contractor shall check all equipment catalog numbers and availability with suppliers and coordinate with all other subcontractors. All materials, equipment, and accessories installed under this contract shall conform to the rules and codes as recommended by the national governing associations. The Contractor shall protect the entire system and all parts thereof from injury during the installation process and up to the acceptance of work.

Existing Conditions

The Contractor shall visit the construction site to determine existing conditions and shall allow for such conditions when computing the bid. The Contractor shall thoroughly inspect the site and the surrounding vicinity for evidence of underground facilities and shall contact companies or agencies likely to have underground facilities in the vicinity of the project before digging or trenching. The Contractor will be held responsible for any damages to existing underground facilities.

Coordination

The Contractor shall coordinate the work to avoid interference and conflicts.

Verification

The Contractor shall verify mounting space, equipment dimensions, and installation requirements before ordering equipment. The

Contractor shall verify the electrical circuit requirements of all equipment to be served before ordering material. Where circuits are to serve specific equipment or feeders, the Contractor shall verify the electrical requirements and the exact location of connections before installing service to the equipment.

Warranties and Guaranties

The Contractor guarantees, by his signing of this contract, all equipment, apparatus, materials, and workmanship for a period of one (1) year after the date of final acceptance of this project. Prior to final acceptance of the project, the Contractor shall furnish to the Bridge Design Engineer Administrator the following additional warranties and guaranties pertaining to each piece of mechanical and electrical equipment furnished:

The manufacturer's standard written warranties apply on all equipment furnished on the project; the Contractor provides a written guarantee that, during a period of one (1) year after final acceptance of the project, all necessary repairs to or replacement of said warranted equipment shall be made by the Contractor at no cost to LADOTD; and other warranties and guarantees apply, as required under the specific items elsewhere herein.

Electrical, Operation & Maintenance Manuals

a. Submit the Operation and Maintenance (O&M) Manual electronically to the Bridge Design Engineer Administrator for review. The electronic file shall be a single PDF file, and shall be organized and formatted to present itself as a finished O&M manual. The entire O&M manual will be considered one Item. Only the title sheet shall be stamped “Returned for Corrections” or “Accepted in accordance with 105.02.” If the O&M manual is rejected after review, comments will be marked in red and will be returned electronically. Correct errors and resubmit electronically to the Bridge Design Engineer Administrator for review. This process will repeat until the Bridge Design

Engineer has no further comments.

After the electronic submittal process has been completed, provide two paper reproductions of the O&M manual to the Bridge Design Engineer Administrator for review. Provide each manual with a white, premium, heavy-duty, three D-ring binder with a title sleeve. Binders shall be appropriately sized to hold enclosed material. Binders shall not be larger than 3 in. Use multiple binders if necessary. Fold half-scale sheets in half with printed material facing out. Provide tab index sheets labeled to delineate sections. If the paper reproduction of the O&M manual is rejected after review, the title sheet of both copies will be stamped "Returned for Correction," and 1 copy will be returned to the Contractor with instructions for corrections. Correct errors and resubmit two copies to the Bridge Design Engineer Administrator for review. This process will repeat until the Bridge Design Engineer has no further comments. Once this process is completed, four additional copies shall be sent to the Bridge Design Engineer Administrator. The title sheet will then be stamped “Accepted in accordance with 105.02,” initialed and dated by the reviewer, and distributed by the Department.

b. Finished Electrical Maintenance Manuals shall be arranged as follows: Each section shall be constructed from the original PDF files reviewed by the Bridge Design Engineer.

   1) A title sheet showing “Louisiana Department of Transportation and Development,” “Electrical Operation & Maintenance Manual,” the project name, project number, parish name, the year the project was completed, and the name of the general and electrical subcontractors and contact information for each.

   2) A “Table of Contents” sheet listing all of the sections below and their sub-categories.

   3) A “Sequence of Operations” section that contains sheets with numeric lists

of the steps required for normal, partial, and fault-clearing operation of the electrical and electro/mechanical systems, including instructions for operating all by-pass switches. Note: The Contractor should contact the Bridge Design Engineer Administrator to obtain a normal operation draft for his consideration.

4) A "Maintenance Schedule" section that contains all equipment maintenance requirements and recommended practices.

5) An "Equipment List" section that contains a table of all electrical items installed. The table shall be as follows: 1st column – item numbers found in the plans, 2nd column – manufacturer's name, 3rd column – catalogue number. A note shall be added to each As-Built equipment list plan sheet as follows: "REFER TO PART 5 OF THE OPERATION AND MAINTENANCE MANUAL FOR THE UPDATED LIST OF INSTALLED EQUIPMENT".

   Exception: If the contractor chooses to (clearly and legibly) edit the actual equipment list on the As-Built drawings, this section will not be required.

6) A "Cut Sheets and Shop Drawings" section that contains all electrical Cut Sheets and Shop Drawing sheets generated from the original PDF files stamped by the Bridge Design Engineer with the "Accepted in accordance with 105.02" stamp, the reviewer's initials, and the date of the review. Organize this section into the following 3 parts: 100, 200, and 300 Items. Shop drawings shall be formatted for printing 11 in. x 17 in.

7) An "Equipment Settings" section that contains all of the electrical equipment settings sheets. The following shall be included where applicable along with any other adjustable settings:

   - The "name plate full load amps

and over load sizes" sheet stamped by the Bridge Design Engineer.

- All time delay and interval settings (examples: relays, brakes, light flashers).
- Resistor bank(s) adjustable tap ohm settings at each power point for each phase.
- Span skew cut out settings (skew in feet and inches).
- Ground Fault Relay milliamp and time delay settings.

8) A "Test Results and Initial Bridge Readings" section that contains the following (when applicable), along with any other readings desired by the Bridge Design Engineer:

- Reading of all motor amps. Where the load varies during operation shall be taken near the beginning, middle, and the end of travel for both opening and closing (examples: span heavy vertical lift bridges, leaf heavy bascule bridges). Exception: For typical warning gates and traffic barriers, the amp readings can be taken near the middle of travel for both opening and closing.
- Conductor Megger readings as required by the plans.
- Span tachometer readings near the middle and ends of travel for both opening and closing the bridge.

9) An "As-Built" section that contains all electrical "As-Built" sheets containing the Project Engineer's signature. These sheets shall be scanned, at high quality, from the full size original drawings and formatted for printing 11 in. x 17 in.

10) A "Warranties" section that contains the Contractor's one year warranty followed by any warranty information for the manufactured items.

Record As-Built Drawings

Upon completion of the project, the Contractor shall furnish one (1) full size (22 in. x 34 in.) complete set of redlined as-built drawings to the Project Engineer reflecting the final as-built condition of the project. The drawings shall reflect all plan and field changes and shall include a complete equipment list showing the manufacturer's name and catalog (or shop drawing) number for each piece of equipment furnished. The drawings shall show the exact location of all installed equipment. All sheets of the as-built drawings shall include the project name, project number, parish, Contractor's name, address, and phone number (with area code). Once the Contractor and the Project Engineer are in agreement that the as-built drawings reflect the as-built conditions, the Contractor shall submit the as-built drawings electronically to the Bridge Design Engineer Administrator for review. The electronic file shall be a single PDF file. After review, only the first sheet shall be stamped "Returned for Corrections" or "Accepted in accordance with 105.02." If the as-built drawings are rejected after review, comments will be marked in red and will be returned electronically. The Contractor shall correct errors and resubmit electronically to the Bridge Design Engineer Administrator for review. This process will repeat until the Bridge Design Engineer Administrator has no comments. Upon completion of the review process, the Contractor shall submit all of the redlined as-built drawings to the Project Engineer for final approval, stamping, signature and date. The Project Engineer shall return the as-built drawings back to the Contractor in order to make one (1) full-size bond set and the required half-size (11 in. x 17 in.) copies of the Installation, Operation and Maintenance manuals, all to be provided to the Bridge Design Engineer Administrator upon final project acceptance.

Codes and Fees

All material and construction shall be in accordance with all building codes, sanitary codes and ordinances in force in the locality in which the work is to be done. In any case where the design

herein differs from the minimum requirements set down by the National Electrical Code (NEC), or any other codes or ordinances in force where work is being done, the Contractor shall maintain the highest level. The Contractor shall make arrangements with all utilities and pay for any service/hookup fees in order to provide power, water, sewage, and/or gas, as specified in the plans.

Quantities

Estimated quantities are given on the plans for informational purposes only. The Contractor shall compute and furnish the quantity of materials necessary to complete the work as detailed on the plans and specified herein.

Tests

The Contractor shall furnish all testing equipment and conduct the following tests:

Performance Test:

All equipment shall be given a two-week (minimum) performance test before final acceptance.

Receptacle Test:

After completion of the electrical system, the Contractor shall test each receptacle for proper polarity and ground continuity; GFCI receptacles test for proper operation.

Special Tests:

Special tests shall be conducted where equipment or systems are suspected of improper operation, or where additional data is necessary to determine conformance with the plans and specifications.

Insulation Test:

Megohm tests shall be conducted on all conductors AWG #10 and larger after the conductors are installed in place, but before connecting equipment that may be damaged by the test. Conductors with readings below

50 megohms, when measured with a 1,000 volt DC insulation tester, will be considered defective.

Generator Testing Requirements:

See *A8.3.9* and *D8.3.9* for information on generator testing.

Contractor must show conclusive evidence of adequate parts and accessories available in Louisiana. Contractor shall provide with the submittals a listing of the Louisiana locations where parts and service can be obtained.

Underground Utilities

LADOTD does not list its underground utilities with any local one-call type organizations; therefore, in addition to other sources, Contractor must contact LADOTD district utilities representative to obtain information concerning LADOTD underground utilities. Contact information may be obtained from the Project Engineer or from the pre-construction meeting. The responsibility for damage and for workplace safety remains with the Contractor.

8.1.2—Safety

The following shall supplement *A8.1.2* and shall be stated on the contract drawings.

All doors of control cabinets, consoles, gate housings, switchboards, control desks, disconnects, junction boxes containing terminal blocks, enclosures containing movable contacts or copper wire size #2 or larger, all similar equipment, and, where specified by the LADOTD Project Engineer, shall be field marked with a label(s), in accordance with NEC, to warn qualified personnel of potential electric arc flash hazards. Label(s) shall be 5 in. x 7 in. and shall be made of high-quality, self-adhesive, water-resistant, and chemical-resistant flexible vinyl. Label(s) shall be outdoor-rated and protected from UV radiation, moisture, oxidation, and other pollutants. Label(s) shall be surface mounted and suitable for installing on flat, round, or irregular surfaces of metal, fiberglass, or paint. Label(s) shall be over-laminated with clear film to provide print protection. Labels shall comply with the

minimum requirements set forth by OSHA 29 CFR part 1910, NFPA 70E, arc flash protection (see NEC 110.16). Any variations to the aforementioned label size must be submitted to the Bridge Design Engineer Administrator for approval. See details below:

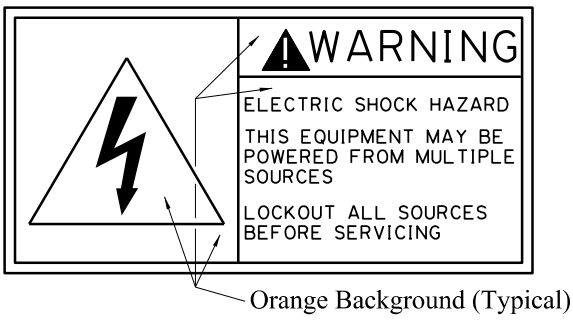

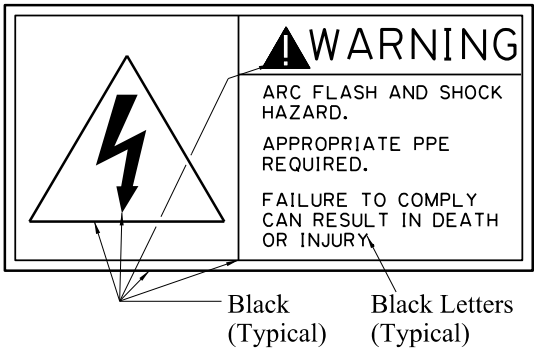

The switchboard, all enclosures, disconnects, junction boxes, etc. that contain service voltage of 120/240 shall have one or more labels with ½ in. high (minimum) letters and shall read as follows:

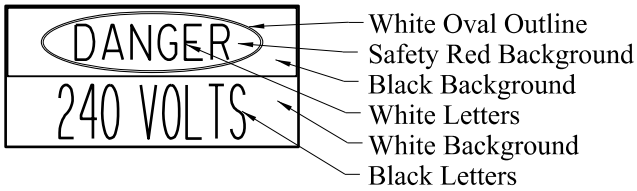

The switchboard, all enclosures, disconnects, junction boxes, etc. that contain service voltage of 480/277 shall have one or more labels with ½ in. high (minimum) letters and shall read as follows:

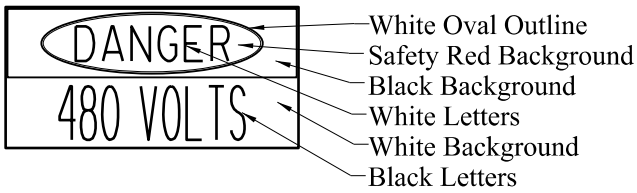

Voltage equal to or above 480 volts shall

require approval from the Bridge Design Engineer Administrator.

The switchboard, all enclosures, disconnects, junction boxes, etc. that contain the service voltages below shall have one or more labels with ½ in. high (minimum) letters and shall read as follows:

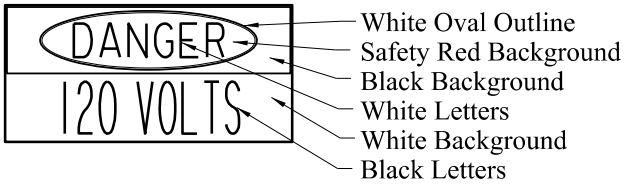

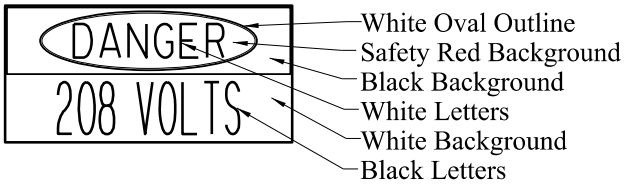

The contract drawings shall clearly indicate NEC clear working space required around all electrical equipment. This includes disconnects, switchboard, control desk, junction boxes, engine generator sets, and any other equipment where NEC requires work spaces.

8.2—DEFINITIONS

The following shall supplement *A8.2*.

Height Selsyn Transmitter—Control device used to transmit the angular rotation of the sheave to the control desk readout. The readout displays the height of the lift span in real time. This device is located on the sheave trunnion closest to the operator's house.

Selsyn Drive Motor—A wound rotor motor used as a power-synchro tie on a tower drive vertical lift bridge. This motor has the same horsepower and frame size as the traction motor. There are two traction motors and two selsyn drive motors incorporated on a tower drive vertical lift bridge utilizing this motor arrangement.

Skew Selsyn Differential—Control device located on the "near tower" diagonally across from the skew selsyn transmitter. This device takes the angular rotation of the sheave and subtracts it from the angular rotation obtained by the skew selsyn transmitter. The difference is transmitted to the control desk and displayed on the skew indicator. The purpose of the Skew Selsyn Transmitter, Skew Selsyn Differential, and Skew Selsyn Indicator is to detect the skewing of the lift span and shut down span movement before any binding occurs among the span, rollers, roller guides, guard rails, and bridge structure.

Skew Selsyn Transmitter—Control device used to transmit the angular rotation of the sheave during the span operation. This device is located on the "far tower" diagonally across from the skew selsyn differential.

Traction Motor—A wound rotor motor used to power a tower-drive vertical lift bridge.

Traffic Barrier—This device is designed to physically stop vehicular traffic from entering the movable

span. The barrier is continuous from curb to curb.

Traffic Gate—Also known as a traffic warning gate. This device is used to stop traffic by swinging down gate arms with flashing lights. This device is not capable of physically stopping a vehicle from crossing the bridge. The gate is not continuous from curb to curb.

8.3—ELECTRIC SUPPLY AND POWER DISTRIBUTION

8.3.1—Commercial Electric Service

The following shall supplement *A8.3.1*.

LADOTD does not list its underground utilities with any one-call type organizations. Therefore, in addition to other sources, the contract documents shall state that the Contractor must contact a LADOTD utilities representative to obtain information concerning LADOTD underground utilities.

Voltage equal to or above 480 volts shall require approval from the Bridge Design Engineer Administrator.

C8.3.1

Contact information may be obtained from the Project Engineer or during the pre-construction meeting. The responsibility for damage and for workplace safety remains with the Contractor.

Calculations shall consider infinite bus for available fault current from the utility service to the transformer.

Available fault current shall only be at the primary coming to the disconnects.

8.3.2—Circuit Breakers

The following shall supplement *A8.3.2*.

Where circuit breakers are to serve specific appliances or equipment, the trip rating and number of poles shall match the requirements of the exact appliances or equipment served. Where breakers are used to control lights or other loads, the breakers shall be approved for switching duty. Where breakers serve new or existing equipment, the contract documents shall state that the Contractor shall verify the requirements of the equipment and submit for approval by the Bridge Design Engineer Administrator, the type and size of breakers required. Where breakers serve existing feeders, the contract documents shall state that the Contractor shall field verify all feeder conductor sizes and shall submit for approval by the Bridge Design Engineer Administrator, the breakers sized in accordance with NEC.

8.3.3—Fuses

The following shall supplement *A8.3.3*.

Spare fuses shall be used in cases where specific wiring devices require reduced-size conductors. All fuse devices shall contain a spare fuse holder.

8.3.3.1—Fuses Rated 20 Amps and Higher C8.3.3.1

The following shall supplement *A8.3.3.1*.

Fuses rated 20 amps and higher should not be used on movable bridge electrical systems unless deemed necessary by the Bridge Design Engineer Administrator or required by the equipment manufacturer.

8.3.3.2—Fuses Rated Below 20 Amps C8.3.3.2

The following shall supplement *A8.3.3.2*.

Fuses rated 20 amps and below should not be used on movable bridge electrical systems, unless deemed necessary by the Bridge Design Engineer Administrator, or required by the equipment manufacturer, or an integral part of a commercially manufactured piece of electrical equipment.

8.3.4—Disconnect Switches

The following shall supplement *A8.3.4*.

Disconnect switches shall have provisions to be tagged and locked out. Disconnect switches shall have a metal disconnect arm. The arm may have an electrical insulated handle which, in some cases, can be plastic.

Disconnects:

Each disconnect shall have a permanently engraved plate attached to the cover or housing with stainless-steel hardware. The plate shall clearly identify the components' function and the specific equipment served.

Nameplate Specification:

Satin-black outer layers with white inner

layers, phenol plate engraving stock, 1/16 in. thick with 45° beveled edges, 3/16 in. high letters, stainless-steel mounting screws.

8.3.6—High Voltage Switch Gear (600 Volts and Above)

The electrical design engineer shall request permission from the Bridge Design Engineer Administrator to use 480 volts and greater.

8.3.8—Transfer Switches

8.3.8.2—Automatic Transfer Switches

The following shall supplement *A8.3.8.2*.

Automatic transfer switches shall have individual fully enclosed arc chutes providing rapid arc quenching, without cross arcing. A sturdy safety enclosure shall surround areas of arcing and mechanical hazard. Manual operation shall be provided to allow safe manual operation of switching speed and precision. Manual operation shall be a permanent part of the operation mechanism. It shall be capable of being switched manually while under load.

The transfer switch shall have auxiliary contacts on both normal and generator side, offering the option of signal to pilot circuits or remote indication. It shall have a neutral bar for ease in tying the neutral conductors. It shall have a ground bar for ease in tying the grounding conductors.

Control accessories shall mount on a dead-front, switch-out control accessory panel mounted on the enclosure back plate, protected to avoid shock hazard while adjusting control functions, but shall provide access to wiring to facilitate servicing. Indicating lamps shall be set in a front-mounted panel. It shall monitor each underground line with adjustable solid-state under-voltage sensors to sense a decrease of voltage below a set point, or a loss of voltage on any phase of the normal power source.

When using an automatic transfer switch in conjunction with a standby generator, provide the following design:

Signal the engine generator set to start in the event of power interruption. A solid-state time-

delay start, adjustable from at least 1 to 6 seconds, shall delay this signal to avoid nuisance startups. Specify the time delay to be factory set to 2 seconds.

Transfer the load to the engine generator set after an adjustable time delay of at least 5 to 180 seconds to allow the engine generator set to reach proper voltage and frequency. Specify that this time delay be factory set to 5 seconds.

Re-transfer the load to the line after normal power restoration. A time delay on re-transfer, adjustable from 1 to 30 minutes, shall delay the transfer to avoid short-term power restoration and allow it to carry load for a set period of time.

Specify an automatic-transfer time-delay bypass to re-transfer the load from the engine generator set to normal source if the generating set output interrupts after normal source restores voltage.

Signal the engine to stop after load re-transfer to normal source. A solid-state time delay stop, adjustable from at least 1 to 10 minutes, shall permit engine to run unloaded in order to properly cool prior to shutdown. Specify the time delay to be factory set to 5 minutes.

Specify a keyed test switch or manual provision to simulate an interruption of power from the normal source.

Specify a solid-state exercise clock to automatically start the engine generator set at regular intervals and to allow it to run for a preset time period for exercise purposes.

Provide a "Without Load" selector switch to be mounted inside of the cabinet to select, test, or exercise as follows:

1. Without load, the engine generator set runs unloaded.
2. With load, the automatic transfer switch transfers the load to the engine generator set time delay, the same as it would for normal source interruption.

Provide a control disconnect to electrically disconnect the control section from the transfer switch for maintenance services during normal operation.

The automatic transfer switch shall be a UL 1008 listed, NEMA rated enclosure for its environment, start delay, NEMA 3R meters

indoor, auxiliary relay, and battery charger that has voltage-regulated current-limited battery float charge (minimum 2 amps). The automatic transfer switch shall be compatible with the controls and programming of the engine generator set. Additional indication lights include lamps for which power source to which it is supplying power (standby generator or utility) and which power sources are available (standby generator and/or utility). The manufacturer shall furnish schematics and wiring diagrams. The transfer switch shall be warranted for a period of five years or 1,500 hours. Parts and labor warranty to begin when the system is first placed into service, as defined by *A8.3.9.a & b*. The firm engaged in supervising the installation of and servicing the transfer switch shall be a factory-authorized service organization in Louisiana and must maintain a stock of standard parts, maintain a staff of experienced technicians specifically trained in servicing engine generator sets, and be available on a 24-hour–per-day, 7-days-per-week on-call basis. A licensed copy of all software and codes required to program the transfer switch shall be supplied by the Contractor as part of this Item.

8.3.8.3—Non-Automatic Transfer Switches

With prior approval from the Bridge Design Engineer Administrator, a “manual” transfer switch may be used to switch between normal power and standby generator power. The transfer switch shall only be operable by qualified personnel. This will require a means of padlocking or locking the transfer switch within a room or building. For portable standby generators, connection devices shall be amp-, voltage-, and weather-rated for the application and must comply with all applicable codes. The manual transfer switch shall provide safe transfer and re-transfer under full load and shall be UL 1008 listed.

8.3.9—Engine Generator Sets

The following shall supplement *A8.3.9*.

The contract drawings shall specify the following engine generator set testing requirements:

a. Check out and startup: The supplier of the electric generating plant and associated items shall provide factory-authorized and trained technicians to check out the completed installation and perform the initial startup of the system. They shall meet with LADOTD personnel to discuss installation and shall provide operating and maintenance instructions at the time of startup.

b. Load bank testing: Shall be performed at the time of the initial startup and check out of the standby power system by the supplier. The supplier shall furnish load banks as required with an operator to perform the following:

   1. Test speed and voltage regulation for instantaneous on- and off-load changes with loads of ¼**,** ½**,** ¾**,** and full load ratings.
   2. Continuous operational test at full load for not less than five hours with voltage, frequency, oil pressure, and engine temperature being recorded at no load, beginning of test, and hourly thereafter through duration.
   3. After the above tests have been performed, reconnect the engine generator set to the bridge loads and test complete system for proper operation.

The contract documents shall state that the Contractor must show conclusive evidence of adequate parts and accessories available in Louisiana. Also, the Contractor shall provide with these submittals a listing of the Louisiana locations where parts and service can be obtained.

The use of engine generator sets for standby or backup power is to be determined by the Bridge Design Engineer Administrator. The frequency of openings and type of marine traffic as well as provisions to operate the bridge after a hurricane will determine if the bridge is qualified to have a standby or backup engine generator set.

Where practical, natural gas engine generator sets are preferred; however, this will require a natural gas line to be located near the bridge. Also, natural gas engine generator sets are usually larger than the diesel/gas type and will require special consideration when designing the machinery house (explosion-proof equipment).

8.3.9.1—General

The following shall supplement *A8.3.9.1*.

The standby engine generator set shall be designed as a separately derived system. Standby engine generator set specifications are as follows:

UL 2200 listed, KW/KVA standby rating @ 125° Celsius rise alternator, 3 phase, 60 hertz, inline circuit breaker, direct injection diesel engine, sound-attenuated (76 DBA or less) outdoor protective housing where required, thermostatically controlled 120 volt, 1000 watt coolant heater, 120 volt, 150 watt oil heater (required on generators north of Interstate 20), control panel with remote NFPA 110 monitor mounted flush on the top surface of the control desk in the control room (see additional requirements in *A8.3.9.3*), vibration isolators mounted beneath the electric plant skid and mounting surface properly anchored to the mounting surface, residential grade muffler with the muffler and all of its piping thermally insulated inside of the operator's house or other enclosure or building housing the engine generator set. The muffler insulation and piping shall be according to manufacturer recommendations; muffler shall have a minimum of two supports. Battery rack built into the electrical plant with maintenance-free lead-acid batteries rated 600 cold-cranking amps at 24 volts, radiator dust flange with flexible section, UL-listed dual-wall sub-base fuel tank (minimum 24-hour full-load fuel capacity) with fuel level indicator, low fuel level and leak alarms; a licensed copy of all software and codes required to program the engine generator set shall be supplied by the Contractor as part of this item. The performance of the engine generator set shall be certified by a factory test as to the set's full power rating, stability, voltage, and frequency regulation; documents of these tests shall be provided.

The standby electrical power system shall be warranted for a period of five years or 1,500 hours. Parts and labor warranty shall begin when the system is first placed into service as defined by *A8.3.9.a & b*. The firm engaged in supervising the installation of and servicing of the engine generator set shall be a factory-authorized service organization in Louisiana and must maintain a

C8.3.9.1

stock of standard parts, maintain a staff of experienced technicians specifically trained in servicing engine generator sets and be available on a 24-hour per day, 7-day per week on-call basis. All equipment needed shall be included in the Contractor's bid price.

8.3.9.3—Generator Instruments and Controls

The following shall supplement *A8.3.9.3*.

The Designer shall include the following additional indication lights on the generator control panel and remote NFPA 110 monitor:

1. When electrically operated louvers are used in conjunction with the engine generator set, provide an additional green and an additional red LED light for both the control panel and 110 monitor (spares can be used or replaced to provide the correct color). Make sure that Mechanical and/or Architectural Design Unit will provide a damper motor with at least one Single-Pole Double-Throw (SPDT) switch activated when the louvers are fully open. The damper motor SPDT switch and LED lights shall be wired into the generator controls, programmed such that only when the engine generator set is running, the red LED will illuminate when the damper louvers are not fully open and the green LED will illuminate when the damper louvers are fully open. Permanently label the green LED "LOUVERS FULLY OPEN" and the red LED "LOUVERS NOT OPEN."
2. Provide a red light indicating "GENERATOR SUPPLYING LOAD" and a green light indicating "NORMAL POWER SUPPLYING LOAD." Provide and install all equipment required for the light to operate correctly.
3. Provide a green light indicating "Utility Power Available." Provide and install all equipment required for the light to operate correctly.

All equipment needed shall be included in the Contractor's bid price.

8.3.9.4—Supplemental Generator Loading

C8.3.9.4

The Designer may propose to use a second smaller standby generator to accommodate the minimal required loads, e.g., navigation lights, operator's house lights, or other minimal loads necessary when not opening or closing the bridge.

8.4—ELECTRICAL CONTROL SYSTEMS

8.4.1—Operating Sequence and Interlocking Requirements

8.4.1.1—Bascule Bridges, Single Leaf, and Double Parallel Leaf

The following shall replace *Step 3* and *Step 7* under "Lower Span" in *A8.4.1.1*.

Step 3: Accelerate drive motors to running speed.

Step 7: With permissive interlock from locking devices, operator raises, i.e. opens, traffic barriers, followed by warning gates. First the oncoming gates, then the off-going gates. Gates and barriers may not be raised simultaneously.

8.4.1.3—Vertical Lift Bridges

The following shall supplement *A8.4.1.3:*

The sequence of operation for a tower drive vertical lift bridge is as follows:

Actions marked with an "*****" are initiated by the operator. All actions listed in one step and separated by a "**:**" occur simultaneously.

1. *Turn on control circuit
   a. Energizes the control circuit. Turns on vehicular traffic stop lights.
   b. Vehicular traffic comes to a stop.
2. *Lower oncoming vehicular traffic gates upon the completion of step "1-b."
3. *Lower off-going vehicular traffic gates after traffic clears for each gate.
4. *Lower movable barriers (dependent on completion of steps "2" and "3").
5. *Raise span (dependent on completion of step "4")

C8.4.1.3

This vertical lift bridge sequence of operation is what is considered to be LADOTD standard design. LADOTD prefers the tower drive vertical lift bridge design utilizing four wound rotor motors (two motors are the traction motors and the other two are selsyn drive motors). One traction motor drives each end of the span, while the selsyn drive motors tie both traction motors together.

This design keeps each end of the bridge level while operating.

a. Span locks retract: span gear box clutch engages (low speed shafts are locked together), span brakes release.
b. Selsyn drive motors synchronize (dependent on release of all span brakes from step “5.a”).
c. Span drive traction motors energize (dependent on completion of steps “5.a” and “5.b”).
d. Span rises to “Fully Raised” position.
e. Span drive traction motors reverse (plug) to begin slowing span: span brakes begin setting according to built-in time delays.
f. Span drive traction motors de-energize when motors drop below pre-set rpm (plugging switches) or when any span brake sets: span selsyn drive motors de-energize when any span brake sets.
g. One of the span brakes mounted to the span motors on each tower sets after a 1-second time delay.
h. The other span brake mounted to the span motors on each tower sets after a 5-second time delay.

6. *Lower span (dependent on completion of step “4”)
   a. All span brakes release.
   b. Span selsyn drive motors synchronize (dependent on span brake release from step “6.a”).
   c. Span drive traction motors energize (dependent on completion of steps “6.a” and “6.b”).
   d. Span lowers to a position just above the “Nearly Lowered” limit switch position where a contact in the span control rotary limit switch is made that enables (but does not energize) the clutch mechanism.
   e. Span lowers to the “Nearly Lowered” position.
   f. Span drive traction motors reverse (plug) to begin slowing the span: Span brakes begin setting according to the built-in time delays. Span drive traction motors de-energize when

motors drop below preset rpm (plugging switches) or when any span brake sets.

g. When one of the span brakes sets, the span gear box clutch begins to disengage; six (6) seconds total disengagement time.

h. When the span reaches a position just below the "Nearly Lowered" limit switch position, a contact in the span control rotary limit switch opens and restricts the span drive traction motors to use only the lowest of the four (4) power points.

i. One of the span brakes mounted to the span motors (on each tower) sets after a one (1) second time delay.

j. The other span brake mounted to the span motors (on each tower) sets after a five (5) second time delay.

k. Span stops approximately 2 ½ ft. above the "Span Seated" position.

l. Span gear box clutches, one on each tower, become fully disengaged (low speed shafts can rotate independently).

m. All span brakes release (dependant on "6.l").

n. Span floats down, due to weight imbalance between span and counterweight: plugging switches prevent span from exceeding preset rpm. The drive motors shall not plug at this step under normal operation.

o. At approximately 2 ft. above the "Span Seated" position, the span reaches the "Nearly Seated" snap action limit switch. This is an emergency backup limit switch that initiates the braking procedure if the "Nearly Lowered" limit switch fails. If the "Nearly Lowered" limit switch has not failed, this limit switch will have no effect on the span operation.

p. Span air buffers control seating of the span.

q. Span seats.

r. When all four (4) span seated limit switches are engaged, span locks return

to latching position: span brakes engage. Note: when both of the near side latches are fully driven, the near side brakes will set. When both of the far side latches are driven, the far side brakes will set.

7. *Raise movable barriers (dependent on completion of step "6").
8. *Raise off-going vehicular traffic gates (dependent on completion of step "7").
9. *Raise oncoming vehicular traffic gates (dependent on completion of steps "7" and "8").
10. *Turn off control circuit:
    a. Deactivated control desk: turns off vehicular traffic stop lights.
    b. Vehicular traffic returns to the movable span.

8.4.1.4—Swing Spans

The following shall replace *A8.4.1.4*.

The sequence of operation for a swing span operated by hydraulic cylinders is as follows:

Actions marked with a **"*"** are initiated by the operator.

All actions listed in one step and separated by a colon **":"** happen simultaneously.

1. *Turn on control circuit
    a. Energizes the control circuit. Turns on vehicular traffic stop lights.
    b. Vehicular traffic comes to a stop.
2. *Lower oncoming vehicular traffic gates upon completion of step "1-b."
3. *Lower off-going vehicular traffic gates after traffic clears for each gate.
4. *Lower movable barriers (dependent on completion of steps "2" and "3").
5. *Withdraw lifts
    a. Span pump motor(s) energize (dependent on completion of step "4").
    b. Lifts (and wedges) fully withdraw.
6. *Pause/Start
    a. Span hydraulic pump arm(s) move to the neutral position.

b. Span control relays prepare the control system for span operation.

7. *Open span (dependent on completion of step "4" and the span control limit switch(es) being in the neutral position)
   a. Span "opening" hydraulic valve(s) open.
   b. Span pump stroke arm(s) move from neutral to full flow: span ramps up to running speed.
   c. Span opens to the "Nearly Open" position.
   d. Span pump stroke arm(s) move from full flow to creep speed: span ramps down to creep speed.
   e. Span opens to the "Fully Open" position.
   f. Span "opening" hydraulic valve(s) close: span stops.
   g. Marine traffic passes through waterway.
8. *Pause/Start
   a. Span hydraulic pumps arm(s) move to the neutral position.
   b. Span control relays prepare the control system for span operation.
9. *Close span (dependent on completion of step "8")
   a. Span "closing" hydraulic valve(s) open.
   b. Span pump stroke arm(s) move from neutral to full flow: span ramps up to running speed.
   c. Span closes to the "Nearly Closed" position.
   d. Span pump stroke arm(s) move from full flow to creep speed: span ramps down to creep speed.
   e. Span closes to the "Fully Closed" Position.
   f. Span "closing" hydraulic valve(s) close: span stops.
10. *Drive lifts & wedges (dependent on completion of step "9.e").
11. *Raise movable barriers (dependent on completion of step "10"). Note: Span

motor(s) de-energize(s) when the span control switch (SW-SC) is moved into "Raise Barriers" after leaving the "Drive Lifts" position.

12. *Raise off-going vehicular traffic gates (dependent on completion of step "11").
13. *Raise oncoming vehicular traffic gates (dependent on completion of step "11").
14. *Turn off control circuit
    a. Deactivates control desk: Turns off vehicular traffic stop lights.
    b. Vehicular traffic returns to the movable span.

8.4.2—Control Logic

The following shall supplement *A8.4.2*.

The control system shall be of a relay logic design. Programmable logic controls (PLCs) shall not be used to control the movement of the span or other items on the project. PLCs are only allowed for acquiring information which does not affect the control or operation of the bridge (e.g., span position).

8.4.2.1—General

The following shall replace the 3rd paragraph in *A8.4.2.1*.

The supply voltage to the control system shall not exceed 240 volts between any two conductors or 120 volts between any conductors and ground, and shall be derived from a solidly grounded system, as defined by the NEC.

8.4.2.3—Programmable Logic Controllers (PLC)

The following shall supplement *A8.4.2.3*.

Programmable Logic Controllers (PLC) shall not be used in electrical systems for movable bridges in the State of Louisiana unless specifically requested and/or approved by the Bridge Design Engineer Administrator.

The Designer shall not use PLC unless they are used for monitoring.

8.4.2.6—Normal Stop

The following shall supplement *A8.4.2.6*.

If the span control system uses a multi-position "Span Control" Switch on the control desk and there is a "Pause/Start" or "Off" position between "Open" and "Close" span or "Lower" and "Raise" span that is designed to bring the span to a normal stop, then a push button will not be required.

8.4.3—Bypass Switches

The following shall supplement *A8.4.3*.

The Designer may also include bypass switches for the end rollers and center wedges on swing span bridges.

8.4.4—Limit Switches

8.4.4.2—Lever Arm Limit Switches

The following shall supplement *A8.4.4.2*.

Lever-arm limit switches shall have a submersible rating (for storm surges, etc.).

8.4.4.3—Rotary Cam Limit Switches

The following shall supplement *A8.4.4.3*.

Rotary cam limit switches shall have individual adjustable lobes.

The rotary cam limit switch design having set screws on each lobe is preferred.

8.4.5—Position Indicator Systems

8.4.5.1—General

The following shall replace the 1st paragraph in *A8.4.5.1*.

Position indicators shall be sufficiently accurate to provide indication of span position and skew angle to the bridge operator within:

- 0.5° for bascule and swing bridges
- 6 in. for vertical lift bridges
- 1 in. for skew of vertical lift bridges

For vertical lift bridge skew, there must be a point of maximum skew which is manually set at

the control desk skew readout dial indicator. This will shut down the moving span whenever the maximum amount of skew has been reached. The maximum amount of skew is dependent on factors such as: skew which will cause binding at the roller and guides and/or skew which will cause the span to contact and damage the handrails or guard rails. A good rule of thumb is to not allow more than 2 ft. of skew, provided there are no interferences between the moving span and the stationary structure.

8.4.5.2—Synchronous Systems

C8.4.5.2

The following shall replace *C8.4.5.2*.

Synchronous systems shall be used in the control path of movable bridges until such systems are no longer available. When synchronous system components are no longer available, alternatives to synchronous systems may be employed.

8.4.6—Control Console

8.4.6.3—Control Console Construction

The following shall supplement *A8.4.6.3*.

The control desk shall be designed using:

- GE SB-9 switches for the operation of the span, gates, and movable barriers.
- Electro Switch or GE SB-9 switches for the Voltmeter and Amp meter selector switches.
- Equal to GE CR104 push buttons and indication lights.
- 20 amp-rated toggle switches for lighting and by-pass switching.

Nameplates shall be affixed to all components on the control desk, identifying the purpose and function of each, e.g., indicator lights, SB-9 switches, dial indicators, dimmer switch, all switches, voltmeter selector, emergency stop, navigation light switches, flood light switches, bypass switches, navigation horn, manual span latching, control circuit switch, etc.

These nameplates shall be satin-black outer layers with white inner layers, phenol plate engraving stock 1/16 in. thick with 45° beveled edges, 3/16 in. high letters with stainless-steel

mounting screws.

The span shall be capable to be operated on the center pier when the controls in the operator's house are turned on, left in the lower barriers position, traffic warning signals are on, the gates are lowered, and the barriers are lowered. The control station on the center pier shall consist of switches, push buttons, and indication lights equal to GE CR104P. It shall be covered with an aluminum or stainless-steel cover with a weather resistant seal and pad locked attachment.

8.5—ELECTRIC MOTORS

8.5.1—General Requirements

The following shall supplement *A8.5.1*.

For wound rotor motor general requirements, see *A8.5.2.2.2*.

8.5.2—Application-Specific Criteria

8.5.2.2—Span Drive Motors

8.5.2.2.2—AC Wound Rotor Motors

The following shall supplement *A8.5.2.2.2*.

Wound rotor motors having the power synchro tie shall be used on tower drive vertical lift bridges and may be used on double leaf bascule bridges having a rack and pinion drive.

The following is the general specification for wound rotor motors which shall be used for movable bridge drive systems, namely the tower drive vertical lift and the rack and pinion driven double leaf bascule. All other drive motor type and configurations must be approved by the Bridge Design Engineer Administrator:

Wound rotor type, 900 rpm, NEMA-X, 460 volts or 240 volts, 3 phase, 40° Celsius ambient, 30 minute duty, 1.0 service factor, class H insulation, copper coils (coated windings), severe/marine duty construction with appropriate seals.

Primary full load amps shall be restricted by the motor specifications/description with a ± allowance of no greater than 10 percent and based on a practical and efficient motor standard. Secondary full load amps and open circuit voltage

shall comply with NEMA MG1. The motor specifications shall include: totally enclosed non-ventilated (TENV) housing, oversized frame appropriate for 900 rpm, all hardware and conduit boxes shall be stainless steel, regreasable ball bearings, stainless-steel double shaft extensions (both drive shaft and plugging switch shaft), non-tapered drive end with keyway, non-tapered plugging switch end without keyway. Coordinate with the mechanical design engineer for motor mounting details.

Provide two motors with conduit boxes on opposite sides. Provide two oversized conduit boxes for each motor: one for the primary conductors and one for the secondary conductors.

Submittal shall contain all options/features/specifications listed above, and the following electrical data:

Full load torque, stall torque, slip or full load rpm, secondary internal resistance, secondary open circuit voltage, and power factor.

For parameters that must be estimated before actual motor is built, a guaranteed maximum allowable tolerance for each estimated value must be stated on the submittal. The Contractor shall coordinate the assembly of the motor, brake, motor coupling, plugging switch, and main gear reducer within a single shop.

Alternate frame size must be submitted for approval.

Motor Installation Requirements: The Contractor shall coordinate the assembly of the motor, brake, motor coupling, plugging switch, and main gear reducer within a single shop.

Motor Testing

Motor testing requirements and data presentation: The motor manufacturer shall provide the following data and perform the following motor test for one of the span motors, assuming that all the span motors provided are of equal design and construction:

1) One assembled motor shall be bench-tested and the following data shall be provided: full load torque, stall torque, slip or full load rpm, secondary internal resistance, secondary open circuit voltage, and power factor.

2) One assembled motor shall be bench-tested and the actual value of the 100 percent external resistance required to limit the full load rotor torque to 50 percent of the full load torque shall be determined and submitted. This value will be referred to as Rx in this document.
3) One assembled motor and its associated resistor bank is to be bench-tested at several resistor settings. The data is to be delivered to the Electrical Design unit for evaluation. Data to be collected is as follows: Provide torque, primary current, and rotor current values at 36 rpm intervals, beginning at 0 and proceeding to 900, or maximum obtainable, rpm (a minimum of 25 data points) for each of the following percent ohms of Rx: 100 percent, 71 percent, 63 percent, 52 percent, 35 percent, 18 percent, 9 percent, 4 percent, and 0 percent. Provide the following graphs for the data obtained:
    a. Torque vs. RPM: Display the points obtained for each external resistance on one sheet. Each external resistance point shall be distinguished from the others by color and plotting point symbol and shall be connected by a continuous line from the first point to the last point.
    b. Primary Current vs. RPM: Display the points obtained for each external resistance on one sheet. Each external resistance set of points shall be distinguished from the others by color and plotting point symbol and shall be connected by a continuous line from the first point to the last point.
    c. Secondary Ohms vs. Full Load RPM (for each value of external ohms): plotted points shall be connected by a continuous line from the first point to the last point.
    d. Torque vs. Full Speed (for each value of external ohms): plotted points shall be connected by a continuous line from the first point to the last point.
    e. Ohms vs. Zero Speed Torque (for each value of external ohms): plotted points

shall be connected by a continuous line from the first point to the last point.

Data acquired in #3 above shall be specified to be provided in table form and submitted to the Bridge Design Engineer Administrator on paper and as an electronic file (on CD or email attachment) in a format recognizable by Microsoft Excel.

8.5.2.3—Skew Control or Synchronizing Motors

C8.5.2.3

The following shall supplement *C8.5.2.3*

For tower drive vertical lift bridges designed by the LADOTD, the use of wound rotor motors having the power synchro tie is preferred. This design has been proven to be more reliable and durable than DC drives and AC flux vector drives. Also incorporated into this design is the ability to open and close the bridge only using one motor in the event of a motor failure, and therefore requiring no auxiliary or backup drive.

8.6—ELECTRIC MOTOR CONTROLS

8.6.1—Speed Control of Span Drive Motors

8.6.1.2—Stepped Resistance Control

C8.6.1.2

The following shall supplement *C8.6.1.2*.

Stepped resistance control is preferred where wound rotor motors are to be used.

8.6.1.3—SCR (AC Thyristor) speed control

C8.6.1.3

The following shall supplement *C8.6.1.3*.

SCR speed control should be avoided.

8.6.3—Resistors

C8.6.3

The following shall replace the 2nd paragraph in *C8.6.3*.

Resistance values should not be used that result in less than 50 percent starting torque at zero speed.

8.6.5—Motor Control Centers

The following shall replace *A8.6.5*.

The switchboard (SB) enclosure and doors shall be of 11 gauge sheet steel welded construction. Paint system shall be: two coat, high-gloss, light gray, polyamide cured epoxy with an organic zinc primer. General plan detail shall be provided and give the layout of the equipment from the front of the SB on ¾ in. thick continuous sheets of Arboron mounting boards. Door width shall not be greater than 3 ft. (preferably 2 ½ ft.). Doors shall be on the front and the back of the switchboard. Each door shall have a minimum of 3 hinges (stationary door mount and pin). Each single door or doors that are paired shall have 3-point latch assembly and the door latch handle shall be a flush chrome plated cup and handle. All doors and both ends of the SB enclosure shall have vent louvers and protected screens at both the top and bottom. Switchboard wire shall be Type SIS, 90° Celsius, 600 volt, meeting the requirements of VW-1, IEEE 323-74 and 383-74, copper conductors, with the exception of higher heat-resistant wires for the resistor banks. If bus bar is required, it shall be tin-plated copper. Wire shall be neatly bundled. Molded case panel mount circuit breakers with back-connected studs and padlock attachment shall be operational with the SB door closed. Nameplate shall be provided on the door to identify these circuit breakers. All equipment on the mounting boards (with the exception of circuit breakers) shall have nameplates inside the SB on the mounting boards. Nameplate shall be made of satin black outer layers, white inner layers, phenol plate engraved stock 1/16 in. thick with 45° beveled edges, 3/16 in. high letters, and stainless-steel mounting screws. All hardware shall be marine duty stainless steel.

8.6.6—Contactors

The following shall supplement *A8.6.6*.

Only use NEMA-rated contactors. IEC contactors are not allowed.

8.7—ELECTRICALLY OPERATED BRAKES

The following shall supplement *A8.7*

For more information on electrically operated brakes see *A6.7.13.2*.

8.8—CONTROL CABINETS

The following shall supplement *A8.8*.

The components found in the control cabinet shall be included as part of the switchboard (see *A8.6.5*) unless a compelling reason to use separate "control cabinets" is warranted. The use of separate control cabinets must be approved by the Bridge Design Engineer Administrator.

8.9—ELECTRICAL CONDUCTORS

The following shall supplement *A8.9*.

All conductors shall be installed in raceways and shall conform to ICEA class B stranded copper. Insulation shall be the type suitable for the environment encountered. Where conductors are connected to or installed near heat-producing equipment (luminaries, heaters, motors, etc.), the conductor insulation for the affixed conductors shall have a temperature rating in excess of the temperature expected to be encountered. Where suitable for the environment and installed in raceways, conductor insulation shall be rated 600 volts and shall conform to UL type XHHW-2.

Cable shall be installed in raceways with the following exceptions:

1. Where exposed for the adjustment of snap action limit switches with the length no greater than what is needed for the full range of adjustment (for example: 18 in. maximum for the "Fully Open" and "Fully Closed" snap action limit switches typically found on swing span bridges).
2. For flex loops from the center pier to the span on swing span bridges, exposed cable shall not be subject to being stepped on.

8.9.1—General Requirements

The following shall replace the 2nd paragraph in *A8.9.1*.

Conductors shall be sized to limit the maximum voltage drop to 5 percent from the incoming service to the end device on any circuit with the following exception:

Conductors shall be sized to limit the maximum voltage drop to 3 percent with motor circuits.

All wire markers shall have a post heat shrunk text height as follows:

- No less than 8/100 in. (0.08”) on #12 and smaller.
- No less than 1/10 in. (0.1”) on #10 and greater.

8.9.2—Splicing and Tapping Conductors

The following shall supplement *A8.9.2*.

Splices will not be permitted in conduit bodies or raceways.

Service and feeder conductors shall be installed in their entire length without splices. Where taps are required from feeder or service conductors, the taps shall be made without cutting the main conductors. Taps shall be made with parallel type gutter tap connectors having insulated covers. Terminal blocks shall be one-piece barrier-type rated 600 volts. The terminal blocks shall also have high pressure box lug terminals suitable for copper conductors.

The following shall replace the 5th paragraph in *A8.9.2*.

Screw-on type wire nuts shall not be used on movable bridge electrical systems.

8.9.3—Labeling and Identifying Conductors

The following shall supplement *A8.9.3*.

Conductor sizes AWG #8 and smaller shall be identified by color coding their entire length. All other conductors shall have individual permanent identification at each termination, splice, tap, junction box, and equipment enclosure.

All disconnects and junction boxes shall have a permanently engraved plate attached to the cover or housing with stainless-steel hardware. The plate shall clearly identify each component's function and the specific equipment served.

Nameplate Specification:

Satin-black outer layers with white inner layers, phenol plate engraving stock, 1/16 in. thick with 45° beveled edges, 3/16 in. high letters, stainless-steel mounting screws.

8.9.7—Submarine Cables

The following shall supplement *A8.9.7*.

Submarine cables shall be constructed in the following ways: cross-linked polyolefin-insulated conductors; polyethylene-jacketed; polyethylene-coated, helically served steel armor; power, communication and control cable with an overall jacket of polyethylene for underwater installations.

8.9.7.1—Conductors

The following shall supplement *A8.9.7.1*.

Conductor insulation must meet the following physical and thermal requirements:

Unaged:

- 1,800 lb./in.^{2} (tensile strength).
- 250 percent elongation minimum.

Aged (air oven at 168 hours at 136° Celsius):

- 80 percent in tensile strength minimum of the unaged conductor insulation.
- 80 percent elongation minimum.

The insulation thickness and wire overall diameter are nominal dimensions. The

C8.9.7.1

ICEA numbers from the old specification, S-66-524/NEMA WC7, have been withdrawn and

dimensional tolerances for the conductors shall meet the requirements of ICEA publication #S-95-658/NEMA WC70. The insulation thickness shall meet the requirements of ICEA publication #S-92-658/NEMA WC70.

Conductor coding shall be accomplished by the use of printed coding consisting of the appropriate color number followed by the corresponding spelled word or words; per appendix L, method 3. The coding shall be legible after handling, subsequent to installation and maintenance.

The insulation shall be easily removable from the conductor. A separator is required between the conductor and the insulation to enhance the strippability.

replaced with S-95-658/WC70.

8.9.7.2—Cable Construction

C8.9.7.2

The following shall replace the last sentence in *A8.9.7.2*.

The direction of lay for adjacent layers shall be reversed. Maximum length of lay shall be in accordance with ICEA publication #S-95-658/NEMA WC70.

ICEA numbers from the old specification, S-66-524/NEMA WC7, have been withdrawn and replaced with S-95-658/WC70.

8.9.7.3—Inner and Outer Jacket Material

C8.9.7.3

The following shall replace *A8.9.7.3*.

The cable shall be provided with a high-density polyethylene jacket according to ICEA publication #S-95-658/NEMA WC70.

The jacket thickness shall be in accordance with ICEA publication #S-95-658/NEMA WC70.

Optional jacketing materials (PVC, TPR, PU) are available to specific functional requirements.

ICEA numbers from the old specification, S-66-524/NEMA WC7, have been withdrawn and replaced with S-95-658/WC70.

8.9.7.4—Cable Armor Wire

C8.9.7.4

The following shall replace *A8.9.7.4*.

HDPE jacketed steel armor:

Cable armor shall consist of strands of galvanized steel wire.

The size and number of strands shall provide coverage of between 91 percent and 97 percent.

Cable armor shall be applied to a nominal lay angle of between 18° and 25°.

The armored cable shall have a polyester separator between armor and armor jacket according to ICEA publication #S-95-658/NEMA WC70.

Armor Jacket:

The armored cable shall be provided with a high-density polyethylene jacket in accordance with ICEA publication #S-95-658/NEMA WC70.

The jacket thickness shall be in accordance with ICEA publication #S-95-658/NEMA WC70.

Optional jacket materials (PVC, TPR, PU) are available to meet specific functional requirements.

ICEA numbers from the old specification, S-66-524/NEMA WC7, have been withdrawn and replaced with S-95-658/WC70.

8.9.7.5—Testing

The following shall replace *A8.9.7.5*.

The following tests shall be conducted on the completed cable:

Voltage test—In accordance to ICEA publication #S-95-658/NEMA WC70.

Insulation resistance—In accordance to ICEA publication #S-95-658/NEMA WC70.

C8.9.7.5

ICEA numbers from the old specification, S-66-524/NEMA WC7, have been withdrawn and replaced with S-95-658/WC70.

8.10—CONDUITS, WIREWAYS, BOXES AND CABINETS

8.10.1—Conduit, General Requirements

The following shall supplement *A8.10.1*.

All conduits shall be installed concealed unless specifically stated on the contract drawings. All conduit runs shall be supported every 5 ft.

Conduits shall not be installed above the wire mesh reinforcing of concrete slabs and shall be placed sufficiently below the slab to permit entrance conduits to emerge perpendicular to the slab surface. Conduits entering the slab shall be continuous to the first device or junction box. Where conduits are installed through fire-rated walls or floors, the holes shall be sealed with fire seals to preserve the fire rating of the barriers.

Where conduits are installed through vapor barriers, the holes shall be suitably sealed.

Where empty conduits are required, the

conduits shall be capped on each end.

Underground conduits shall be installed 3 ft. below grade unless otherwise stated on the contract documents.

Where conduits are subject to movement or cross expansion joints, the conduits shall be supplied with expansion and/or deflection fittings, or other methods having been determined by the Bridge Design Engineer Administrator. Expansion fittings shall be installed at all transitions from one fixed structure to a separate structure, including conduits crossing expansion gaps between approach slabs, and/or as deemed necessary by the Bridge Design Engineer Administrator. All expansion fittings shall have an integral bonding jumper (braid).

8.10.1.1—Rigid Steel Conduit

The following shall supplement *A8.10.1.1*.

Rigid steel conduit shall conform to ANSI C80.1 and shall be installed where conduits enter the ground or slab, or where shown on the plans. Fittings shall be threaded type with cast or malleable iron bodies and covers having a zinc finish, solid neoprene gaskets, and stainless-steel setscrews.

8.10.1.2—Rigid Aluminum Conduit

The following shall supplement *A8.10.1.2*.

Rigid aluminum conduit shall conform to ANSI C80.5 and shall be installed where conduits are required outdoors, in hazardous locations, where subject to physical damage, or where deemed necessary by the Bridge Design Engineer Administrator.

Threads shall be painted with a conducting oxide-inhibiting compound before installation.

Fittings shall be threaded type with cast or die-cast copper-free bodies and covers, solid neoprene gaskets, and stainless-steel screws. Expansion fittings shall be installed with external aluminum bonding straps, stainless-steel u-bolt clamps and hardware.

Rigid Steel PVC Coated Conduit

The Designer shall have to make a request to the Bridge Design Electrical Section and include justifications to see if PVC-coated conduit will be allowed. The product specifications in the contract shall include installation regulations similar to the following: Manufacturers of PVC-coated conduit stipulate specific tools and procedures for proper clamping, cutting, threading, bending, and assembly of conduit. All manufacturers' installation guidelines must be strictly adhered to by the Contractor. To assure proper installation, all those installing PVC-coated conduit shall be certified by the manufacturer of the coated conduit being used and shall provide certificate of training to the Contractor, the Project Engineer, and the designer prior to installation.

8.10.1.3—Electrical Metallic Tubing (EMT)

The following shall supplement *A8.10.1.3*.

Electrical metallic tubing (EMT) shall conform to ANSI C80.3 and shall be installed only where specified by the electrical engineer. EMT shall not be installed where subject to physical damage or corrosion, in concrete, or underground. EMT shall not be connected to rigid conduits without a device or junction box. Set screw type fittings will not be acceptable. All fittings shall be the compression gland type having an insulated throat. All EMT require equipment grounding conductors.

8.10.1.4—Rigid Nonmetallic Conduit

The following shall supplement *A8.10.1.4*.

Rigid nonmetallic conduit shall be schedule 40 PVC or schedule 40 High-Density Polyethylene (HDPE) and shall be buried 3 ft. underground unless installed under concrete slabs. Nonmetallic conduit will not be permitted above ground or slabs. All nonmetallic conduits shall contain an equipment grounding conductor.

Submarine Conduit

The following shall supplement *A8.10.1.4*.

Prior to installation, the Contractor shall provide the proposed method for installing and weighting the submarine ducts to the Bridge Design Engineer Administrator for approval along with the buoyancy force calculations.

Submarine cables/ducts that run up the sides of piles from the underwater floor shall be secured with ¼ in. x 3 in. marine-duty stainless-steel straps located every 3 ft. (maximum), starting from the underwater floor. Secure by pressure; do not anchor the straps to the pile. Secure submarine cables/ducts with pipe clamps on top of surfaces (piers, house floors) where they run up through and surfaces.

Submarine Duct Specifications:

Schedule 80, Electrical-Listed, Smooth-Wall, High-Density Polyethylene Conduit.

8.10.1.5—Flexible Metal Conduit

The following shall supplement *A8.10.1.5*.

Flexible nonmetallic conduit shall not be used.

Flexible metal conduit shall conform to ANSI C33.92 and shall be installed where a connection is made to recessed lighting fixtures, motors, transformers, and other equipment requiring a flexible connection. When flexible conduits are installed outdoors or in areas subject to moisture, oil, or other liquids, the conduit shall be of liquid tight construction.

Flexible metal conduits shall be installed in 36 in. maximum lengths or a maximum according to the minimum bending radius of the conduit, except for sections serving recessed lighting fixtures in buildings, in which case they may be 4 ft. in length. Flexible conduit connectors shall be compression type with ground lugs. Thread on type connectors shall not be acceptable. All flexible conduits shall have external bonding jumpers.

External bonding jumpers shall be sized based on the following: Largest grounding conductor in the conduit, #6 AWG, or minimum size of the connector ground lug wire range, whichever is

greater.

BX and armored cable shall not be used.

8.10.2—Wire ways

The following shall supplement *A8.10.2*.

Wire ways shall not exceed 25 percent fill.

8.10.3—Junction Boxes and Terminal Cabinets

The following shall supplement *A8.10.3*.

All conduits entering junction boxes shall have bolt on hubs. For conduits of 1 ½ in. diameter or less, if the electrical design engineer determines that a lack of space disallows the use of bolt on hubs, the electrical design engineer has the option to use NEMA 4X Myers type hubs with a bonding wedge (grounding) locknut or a locknut with a grounding screw with bare conductor to ground.

Where metal boxes are mounted to concrete there shall be a ¼ in. space between the box and the concrete.

All junction boxes shall have a 1/8 in. drain hole in the bottom and a breather in the top.

8.11—SERVICE LIGHTS AND RECEPTACLES

The following shall supplement *A8.11*.

All receptacles and switches shall be mounted flush and wires shall be connected by means of screw terminals. Switches and receptacles shall not be located on wall spaces that are obstructed by open doors, or on permanently installed counters, cabinets, or equipment.

Receptacles shall be grounding type and shall have standard configurations, except where installed to serve specific equipment that is provided with other configuration plugs.

1. General-purpose wall receptacles shall be mounted 18 in. from the finished floor to the receptacle center except to avoid conflicts with other equipment.
2. Bridge receptacles shall be ground-fault circuit interrupting.

Switches shall be quiet type. The number of

C8.11

The following shall supplement *C8.11*.

For fluorescent lighting, all fluorescent ballasts shall be provided with a ballast disconnect. Alternatively, the ballast disconnect may be provided in the cabinet to be served.

poles and type shall be as required for intended use. Where switches are required for general lighting control and connected to 20 amp branch circuits, the switches shall be rated 20 amps.

1. Light switches shall be mounted on the walls adjacent to the latch side door jamb, approximately 50 in. from the floor, except to avoid conflicts with other equipment.

8.12—GROUNDING

8.12.1—General

The following shall replace *A8.12.1*.

A grounding system shall be provided to meet or exceed the requirements of the NEC (see NEC Article 250 requirements for other items that may be required to be bonded to the grounding system, for example, metal framing of building or structure, metal underground water pipe). The grounding system shall be bonded to the utility neutral only in the main (service) disconnect and to the generator neutral only at the engine generator set.

Where step-down transformers are provided, grounding shall be according to applicable codes.

The power system supplying the bridge shall be a solidly grounded system.

All grounding conductors shall be copper and shall have green insulation, unless otherwise determined by the electrical design engineer.

8.12.2—Equipment Grounding

The following shall supplement *A8.12.2*.

UL-listed means of terminating grounding conductors shall be provided for all enclosures requiring splices to ground.

8.12.3—Structure Grounding

The following shall supplement *A8.12.3*.

Ground rods shall be ¾ in. diameter x 10 ft. (minimum), constructed from nickel-sealed high-quality carbon steel having a consistent covering of electrolytically applied copper (i.e. copper bonded or copper clad). Multiple ground rods shall

be separated, 10 ft. minimum. All ground rods shall be UL listed.

UL-listed exothermic welds ("CADWELD," "THERMOWELD," or approved equal, shall be used when connecting grounding electrode conductors to ground rods. When multiple ground rods are required, grounding electrode conductors may be cut, provided a suitable exothermic weld is utilized. All grounding electrodes shall be installed unbroken from the first ground rod to the respective service equipment. All exposed grounding electrode drops to ground rods outside shall be installed in UV-rated schedule 80 PVC conduit (minimum).

8.13—LIGHTNING PROTECTION

The following shall supplement *A8.13*.

The contract documents shall state that the lightning protection system shall be installed by a firm presently engaged in the installations of master-labeled or LPI-certified lightning protection systems. Once the lightning protection system is completed, it shall be inspected by a UL field representative and modified to obtain a UL MASTER LABELED certification.

Alternately, if the Master Label Certificate is not obtainable due to bridge construction conflicts only, a UL Letter of Findings shall be obtained. UL 96A installation requirements for lightning protection systems, NFPA 780 "Standard for the installation of Lightning Protection Systems," or other applicable approved published lightning protection standards may be used to obtain the Master Label Certificate or Letter of Findings. If a standard other than UL 96A or NFPA 780 is utilized for the inspection, it is the installers' responsibility to provide a copy of the standard to UL prior to the inspection. The Designer is to make certain that the Contractor coordinates all requirements with the certifying inspector prior to installation.

SUBMITTALS

This section was added to the *BDEM* to provide the Consultant the LADOTD Bridge Design submittal process which the Contractor will be required to follow. It is the Consultant's responsibility to obtain the most current edition of the *Louisiana Standard Specifications for Roads and Bridges (Standard Specifications)* to obtain the submittal process and procedure. Additionally, the Consultant shall contact the Bridge Design Engineer Administrator to verify that there has not been any amendment to the submittal procedure after the latest publication of the *Standard Specifications.*

The following is the most current submittal process which the Consultant shall include in the contract documents:

After the start of the assembly period and prior to commencing work, the Contractor shall provide electronic submittals, as PDF documents, to the Bridge Design Engineer Administrator. Submittals 10MB or less can be transmitted through email. All larger submittals shall be sent through the large file transfer system selected/approved by the Bridge Design Engineer Administrator. Other methods can be considered upon request.

Submittals shall include, but are not limited to, catalog cut sheets, shop drawings, descriptive data, installation and operating instructions, brochures, etc., for all material to be installed on the project. The state project number, project name, fabricator or manufacturer's name, and Contractor's company name shall be on every sheet of the submittal and be in a typed or stamp format. Handwritten submittals are not acceptable. All cut sheets within the submittal shall have all pertinent data on each item clearly marked to indicate material description, brand name, model number, size, rating, and manufacturing specification. Do not use highlighting to mark information. Submittals that do not contain all data necessary to verify conformance will be returned for correction. Additional submittals or random samples may be requested at the discretion of the Bridge Design Engineer Administrator or Project Engineer.

Shop drawings shall easily print to full size (22 in. x 34 in.). Equipment submittals shall easily print to 8 ½ in. x 11 in. or 11 in. x 17 in.

Equipment brochures shall be clear and legible. Provide accurate representation of colors and patterns where such is called for in the item's description or as needed for clarity.

After review, items that are stamped "No Exceptions Taken" will be distributed electronically. Items stamped "Returned For Correction" shall be corrected and resubmitted. Any comments on submittals are not intended to relieve the Contractor from compliance with the contract documents. Approval of submittals and drawings does not imply that the equipment and materials described is complete, can be constructed or installed, will operate successfully, or will coordinate with existing or other equipment specified. The Contractor shall remain responsible for confirming and correlating all quantities and dimensions, selecting fabrication processes and techniques of construction, coordination of the work, performing the work in a safe and satisfactory manner, and for satisfactory installation and operation of equipment.

The furnishing of all submittals, shop drawings, samples, etc. as required herein is paid for under Item 730-09-00100. No material shall be ordered and no fabrication or installation of equipment shall begin until the related submittal has been distributed without exception by the Bridge Design Engineer Administrator and a copy has been received by the Project Engineer.

Note: See *A8.1.1* for the submittal process with regards to “Installation, Operation, and Maintenance Manuals.”

REFERENCES

AASHTO LRFD Bridge Construction Specifications, Latest Edition, American Association of State Highway and Transportation Officials, Washington D.C.

AASHTO LRFD Movable Highway Bridge Design Specifications, Including the Latest Interim Revisions to the 2nd Edition, American Association of State Highway and Transportation Officials, Washington D.C., 2007

AASHTO Standard Specifications for Movable Highway Bridges, 5th Latest Edition, MHB-5. American Association of State Highway and Transportation Officials, Washington D.C.

Louisiana Standard Specifications for Roads and Bridges, Latest Edition, State of Louisiana Department of Transportation and Development, Baton Rouge, LA

Applicable Standards and Codes:

ANSI—American National Standards Institute

ICEA—Insulated Cable Engineers Association

IEEE—applicable Institute of Electrical and Electronics Engineers standards for electrical components and equipment

NEC—National Electrical Code (NFPA 70)

NEMA—applicable National Electrical Manufacturers Association standards for electrical components and equipment

NESC—National Electrical Safety Code (ANSI C2)

NFPA—National Fire Protection Association

NFPA 70E—Standard for Electrical Safety in the Workplace

NFPA 110—Standard for Emergency and Standy Power Systems

NFPA 780—Standard for the Installation of Lightning Protection Systems

OSHA 29 CFR part 1910—Occupational Safety and Health Standards

UL96A—Standard of Installation Requirements for Lightning Protection Systems

UL 1008—Transfer Switch Equipment

UL 2200—Standard Engine Generator Assemblies

VW-1 (UL 1581)—Standard for Vertical Flame Test

APPENDIX —REQUIRED ELECTRICAL PLAN SHEETS

REQUIRED ELECTRICAL PLAN SHEETS GENERAL (ALL BRIDGE TYPES)

- The electrical design engineer shall contact the Bridge Design Engineer Administrator and obtain example plan sheets.
- Call 225-379-1315 or 225-379-1086.
- See the particular bridge types in the following Appendices for additional required sheets.
- If a plan sheet does not have enough space for the required material, additional sheets must be added.

E0 Sheets: Electrical Requirements & Specifications

Electrical General Requirements Sheet

Shall contain all of *A1.3.1* with any modifications for specific conditions.

Electrical Specifications Sheet

Shall contain all of *A1.3.2* with any modifications for specific conditions.

E1 Sheets: General Plan Layouts & Operator's House Layout

General Plan Layouts

This is the Plan and Profile sheet for the project. This sheet is built upon the corresponding civil/structural sheets and is used to indicate the placement and flow of electrical and mechanical items with the inclusion of minimum civil/structural details needed for clarity. This includes all mechanical and electrical items with exception of those inside of the operator's house. Refer to the particular bridge types located in the following appendices for further exceptions or additions.

Operator's House Layout

The Operator's House Layout Sheet shall show the electrical floor plan of each floor. This sheet shall show all electrical equipment and mechanical items that will require electrical power. Typical electrical equipment includes: lights, switches, receptacles, disconnects, air compressor, switchboard, control desk, photocells, navigation horn equipment, engine generator set, transfer switch, and surge protection device. Typical mechanical equipment includes: air handling unit, condensing unit, exhaust fans, sewage treatment equipment, and hot water heater.

E2 Sheets: Riser Diagram, Conduit and Wire Schedule

Riser Diagram

The riser diagram and shall show all raceway, junction boxes, electric equipment, and mechanical equipment requiring electrical power. The layout shall reflect the actual physical layout as much as possible. Every conduit and cable shall be assigned a conduit number. Equipment numbers and labels/descriptions shall be shown to differentiate and identify different equipment.

Conduit and Wire Schedule

This sheet shall be compiled using the riser diagram. It shall contain the following information about every conduit, cable, or raceway in table form from left to right:

1. Conduit number from the riser diagram.
2. Nominal conduit size.
3. Approximate length of conduit (also cable type if used).
4. Number and size of conductors and cable type if used.

Wire numbers/labels for conductors located in conduit, cable, or raceway. Provide a ground wire in all conduits and cables. Provide 10 percent to 15 percent spares in all conduits, with the exception of the power wires from the electrical service, engine generator set, and transfer switch. Indicate the number of spares in the same section where the wire labels are located.

E3 Sheets: 3 Phase Power, 1 Phase Power

Three (3) Phase Power Schematic

Wiring diagram showing all phases, wires, and wire numbers starting from the service conductors feeding the service disconnect to the 3 phase loads. Wire numbers change across circuit breakers, disconnects, contactors, motor starters, and the transfer switch. Symbols representing these items, loads, and others items are drawn on this sheet. Amp meter current transformers and amp meter selector switch table is show on this sheet. Equipment numbers and labels/descriptions shall be shown to differentiate and identify different equipment. Where there is a 208 volt high leg, tag this phase with a warning and give instructions to mark the high leg orange at the service disconnect, engine generator set, switchboard, and where the NEC code requires.

Single (1) Phase Power Schematic

Wiring diagram showing all phases, wires, and wire numbers starting from the load conductors from the main circuit breaker in the switchboard to all non 3 phase loads. Wire numbers change across circuit breakers, disconnects, contactors, switching devices. Symbols representing these items, loads, and others items are drawn on this sheet. Equipment numbers and labels/descriptions shall be shown to differentiate and identify different equipment. Where there is 120/240 volt power with a 208 volt high leg, the 120 volt loads shall not be connected to the 208 volt high leg.

E4 Sheets: Control Schematic, Indication Light Schematic

Control Schematic

One sheet shall contain the entire control system schematic (wiring diagram), starting from the line side of the control system circuit breaker. Place the Span Control Switch (SW-SC) table on this sheet. Control wire number shall beginning with the letter "C." Control schematic additions: If there is available space:

a) Place all snap action, rotary, and traffic gate limit switch contact activation tables on this sheet.
b) Place the Gate Control Switch (SW-G1, SW-G2, SW-G3, SW-G4), Control Circuit Switch (SW-CC), and Voltmeter Selector Switch (SW-VM) tables on this sheet.

Indication Light Schematic

Indication light wire numbers shall begin with "I." If the indication light circuit used a neutral wire, this wire number will start with "N." If there is available space and the control schematic additions do not fit on the control schematic sheet and do not need a complete sheet of their own, they may use space on this sheet.

E5 Sheets: Details Sheets

General details which shall be located on these sheets are:

1. Custom-built junction box details and information. Notes to include the position of all electrical enclosures such that NEC clear work space is not violated.
2. Bolts on hub detail.
3. Junction boxes: drawings showing width, height, and terminal block placement with the actual wire numbers on the terminal blocks.
4. Service pole: profile and equipment description and instructions.
5. Traffic warning signals: profile, mounting base and its positioning, breakaway base with pull apart connector, and conduit in the mounting base.
6. Navigation light: profiles, junction boxes, and means of mounting.
7. Conduit clamping methods.
8. Traffic gates: profiles, mounting base and its positioning, orientation of gate box with lowered arm and mounting base to the approaches with side barriers, and conduit in mounting base. The center line of gate arms shall be 33 in. above the approach, where the arm of the gate is 4 ft. from the approach center line. The ends of two separate gate arms on the same side of the waterway, not including the end lights, shall be between 18 in. to 24 in. apart.
9. Junction box mountings: Profiles, maintain NEC workspace clearance, places that junction boxes are mounted, dimensions for mounting, materials and methods for mounting.
10. Limit switch and disconnect mounting methods, placement, material, and dimensions.

E6 Sheets: Bridge Equipment List

This sheet is the equipment list for all electrical items not located on the switchboard or control desk. The items shall be numbered consecutively beginning with number 300. The following information shall be included for each item:

1. Item number.
2. Quantity of item.
3. Item name including abbreviated label where applicable. Ex. For traffic gates: TRAFFIC GATES (G1, G2, G3, G4).
4. Name and catalog number of primary manufacturer.
5. Name of alternate manufacturer for projects receiving federal aid.
6. Description of item to include all pertinent information about the equipment. This description shall be sufficiently detailed to govern all requirements for the Contractor to submit an approved equal to the primary and alternate manufacturer's equipment.

A note section on the equipment list sheet shall explain the following contract notes, in addition to equipment notes that are specific to the project:

1. Equipment shall be as specified or approved equal.
2. Description shall govern over catalog numbers.
3. All conduits shall have bolt-on hubs. For conduits of 1 ½ in. diameter or less, Myers hubs with grounding locknuts might be allowed if the electrical inspector determines that the lack of space disallows the use of bolt-on hubs.
4. Be aware of the NEC cubic inch capacity requirement concerning device, pull, and junction boxes.
5. UL-listed means of terminating grounding conductors shall be provided for all enclosures requiring splices to ground. Examples are junction boxes on E5 sheets.

E7 Sheets: Switchboard Detail

The switchboard detail shall show general layouts of electrical equipment located on the exterior and in the interior of the switchboard. The switchboard equipment layout shall ensure that sufficient space is provided for each electrical component and its respective wires.

The exterior layout shall depict the locations of the circuit breaker access points, circuit breaker nameplates, and door latches. Equipment is to be arranged to reflect the physical orientation of the switchboard. The circuit breaker nameplates shall be inscribed with the breaker's function and abbreviation where applicable. Ex. For emergency stop; EMERGENCY STOP (CB-ES).

The interior layout shall depict the terminal block layout, to include all wire numbers terminating inside the switchboard. Each terminal block shall allow the wire bending radius required by the NEC for the largest wire size used.

The interior layout shall also depict all electrical components that require wiring, to include: meters, heaters, circuit breakers, relays, starters, door switches, dimmers, luminaries, etc. Electrical equipment shall be labeled to reflect the wire numbers connected to each piece of equipment. The switchboard shall be wired from the back. All wiring shall be laced into well supported bundles with nylon cable ties. All corners shall be rounded and all welds shall be grounded smooth.

E8 Sheets: Switchboard Equipment List

This sheet is the equipment list for the switchboard and all its electrical components. The items shall be numbered consecutively beginning with number 200. The following information shall be included for each item:

1. Item number.
2. Quantity of Item.
3. Item name including abbreviated label where applicable.
4. Name and catalog number of primary manufacturer.
5. Name of alternate manufacturer for projects receiving federal aid.
6. Description of item shall include all pertinent information about the equipment. This description shall be sufficiently detailed to govern all requirements for the Contractor to submit an approved equal to the primary and alternate manufacturer's equipment.

A note section on equipment list sheet shall explain the following contract notes, in addition to equipment notes that are specific to the project:

1. Equipment shall be as specified or approved equal.
2. Description shall govern over catalog numbers.
3. Control and indication wires in the switchboard that do not leave the switchboard and are connected between control devises devices or connected between control devices and the terminal blocks in the control switchboard will be allowed to be a minimum size of #12 AWG.

E9 Sheets: Control Desk Details

The control desk detail sheets shall show general layouts of electrical equipment located on the exterior and in the interior of the control desk. The control desk equipment layout shall ensure that sufficient space is provided for each electrical component and its respective wires.

The exterior or top layout shall depict the locations of the switches, push buttons, indication lights, meters, generator enunciator panel, and nameplates. The profiles shall indicate desk dimensions, door, and door handle locations. Equipment is to be arranged to reflect the physical orientation of the control desk. All corners shall be rounded and all welds shall be grounded smooth.

The interior layout shall depict the terminal block layout, to include all wire numbers terminating inside the switchboard. Each terminal block shall allow the wire bending radius required by the NEC for the largest wire size used. Other interior components requiring details are: bypass switch mounting, bypass switch nameplates, 3 point latching on double doors, means of mounting piano hinges, door rubber bumpers, and means of manual navigation horn operation.

Wiring of the control desk: The electrical equipment shall be labeled to reflect the wire numbers connected to each piece of equipment. The control desk wiring shall be show as viewed from underneath. All wiring shall be laced into well-supported bundles with nylon cable ties.

E10 Sheets: Control Desk Equipment List

This sheet is the equipment list for the control desk and all its electrical components. The items shall be numbered consecutively beginning with number 100. The following information shall be included for each item:

1. Item number.
2. Quantity of item.
3. Item name, including abbreviated label where applicable.
4. Name and catalog number of primary manufacturer.
5. Name of alternate manufacturer for projects receiving federal aid.
6. Description of item to include all pertinent information about the equipment. This description shall be sufficiently detailed to govern all requirements for the Contractor to submit an approved equal to the primary and alternate manufacturer's equipment.

A note section on the equipment list sheet shall explain the following contract notes, in addition to equipment notes that are specific to the project:

1. Equipment shall be as specified or approved equal.
2. Description shall govern over catalog numbers.
3. Control and indication wires in the control desk that do not leave the control desk and are connected between control devices or connected between control devices and the terminal blocks in the control desk will be allowed to be a minimum size of #12 AWG.

REQUIRED ELECTRICAL PLAN SHEETS FOR SWING SPAN BRIDGES

All required electrical plan sheets in the appendix titled "Required Electrical Plan Sheets General (all bridge types)" shall apply.

E1 Sheets: Center Pier Layout

This is a plan view of the center pier which shows the placement of electrical and mechanical items mounted to the center pier and to the pivot bearing girder. Typical items shown are mounting brackets, limit switch strike plates, snap and rotor limit switches, hydraulic cylinders, pump motor assembly, hydraulic tubing, disconnects, conduit and flexible cable, and junction boxes. If space is available on this sheet, limit switch mounting bracket and strike plate details may be shown. Otherwise, these details should be located on the E5 sheets.

E5 Sheets: Detail Sheets

Provide a detail showing the profile of the center pier platform and the bearing girder. Detail shall face the side of the bearing girder which the span junction box is mounted on. This detail shall also include the following: Conduits, lights, receptacles, center pier junction boxes, center wedge or lift junction boxes, center wedge or lift limit switches, and flex loop from the center pier junction boxes to the span junction boxes. Note: This detail is not required to show conduits, disconnects, span motors, or hydraulic equipment on the center pier itself other than the duct/cable from the operator's house and the conduits to the flex loop feeding the span.

Provide details for the center pier auxiliary control station. Details shall include a) layout of push buttons, switches, and indication lights, b) layout for back wiring of "a," and c) legend for the nameplates for the push buttons, switches, and indication lights.

REQUIRED ELECTRICAL PLAN SHEETS FOR VERTICAL LIFT BRIDGES

All required electrical plan sheets in the appendix titled "Required Electrical Plan Sheets General (all bridge types)" shall apply.

E1 Sheets: Machine Deck Layout

This is a plan view of both machine decks (and crosswalk if provided for in the design) which shows the placement of electrical, mechanical, and civil equipment. Typical items shown are conduits, junction boxes, lighting, height and skew indication equipment and their enclosures, lightning protection system equipment location and routing, span motors, span brakes, differential motor (mechanical), and the differential limit switch. Other mechanical and civil items shown are handrails, stairs, sheaves with their mounting stands, trunnion shafts and their bearings, and the main parallel shaft reducers. Show which columns the conduits use to provide access to the machine decks.

E4 Sheets: Selsyn Schematics

Provide wiring diagrams for the connections to the height and screw selsyn systems.

E5 Sheets: Tower Stair Light Mounting

Provide details for the tower stair light mounting.

E6 Sheets: Lightning Protection System Additional Material Specifications

All conductors and lightning rods shall be made of copper with the exception of when the lightning protection system is mounted to aluminum material (Examples: 1) Operator's house having an aluminum roof, 2) Running along light poles that are aluminum).

All connectors that are not underground, under water, or cast in concrete shall be bolt tension type and not a compression type and shall have material compatible with the conductors. All connections that are underground, underwater, or cast into concrete shall be exothermic welded.

Ground loops shall be installed a minimum of 5 ft. from the underwater floor and have 10 ft. x ¾ in. copper ground rods. Exothermic weld the ground loop to all down conductors and the ground rods.

Tower machine decks having concrete columns shall have insulated-copper down conductors running concealed inside the columns and continue through the concrete piers. Down conductors, in route to the grounding loop, shall exit underneath the piers near the piles to which they will be secured. See specifications to follow for bonding the down conductors to rebar.

Down conductors will be running along some of the pier and house piles. Bond the rebar in the pier to the pre-stressed cable in the effected piles in accordance with NFPA 780. The top 2 in. (maximum) of concrete surrounding one pre-stressed cable of each effected piles shall be removed for exothermic welding.

Sheave lightning rods are to be mounted on top of 2 in. diameter galvanized heavy-duty steel poles. Poles shall be mounted to the sheaves bases using stainless hardware. Prime and paint poles to match sheaves. Note: Do not paint lightning protection system conductors.

Lightning protection system conductors shall be secured every 3 ft. (maximum). See NFPA 780 for bending regulations.

Bonding conductors and associated connectors may not be shown in the plans but shall be provided and installed. A list of items requiring bonding to the main conductors (loops and down conductors) using bonding conductors are listed below. The list below may not be complete. Provide any additional bonding that is required by governing codes.

1. Tower columns and tower machine decks: sheave bases, light poles, machinery bases, junction & pull boxes, handrails, conduit, stairs (at the top and bottom), guide rails for counterweight and span (at the top and bottom), rebar in concrete columns (near the top and bottom), horizontal rebar in the tower machinery decks (at the top and bottom layers of both far ends).
2. Bottom of bridge towers and tower piers: handrails, stairs, junction & pull boxes, conduit, vertical rebar in the columns (at the bottom) and horizontal rebar in the tower piers (at the top and bottom layers at both far ends), pre-stressed cable in effected piles, barrier machinery base and barrier towers.
3. Operator's house equipment, which includes: handrails, condensing unit, stairs (at the top and bottom), equipment inside and outside the operator's house, engine generator set, generator fuel tank, door frames, vent grills, roof metal, rebar/metal in the concrete floors, pre-stressed cables in effected piles, and conduit.

REQUIRED ELECTRICAL PLAN SHEETS FOR BASCULE BRIDGES

All required electrical plan sheets in the appendix titled "Required Electrical Plan Sheets General (all bridge types)" shall apply.

E1 Sheets: Bascule leaf Pivoting Pier Layout & Bascule leaf Pivoting Pier Profiles

Bascule leaf Pivoting Pier Layout

This is a plan view of the bascule leaf pivoting pier which shows the placement of electrical and mechanical items mounted to the pier and to other structural items associated with the pier. Typical items shown are mounting brackets, rotary limit switches, hydraulic cylinders, pump motor assembly, hydraulic tubing, disconnects, conduit and flexible cable, service lights and receptacles, junction boxes, conduit, and submarine cabling means to the service, operator's house, and far side pier.

Bascule leaf Pivoting Pier Profiles

As many profiles as needed to clarify equipment elevation and installation.

REQUIRED ELECTRICAL PLAN SHEETS FOR PONTOON BRIDGES

All required electrical plan sheets in the appendix titled "Required Electrical Plan Sheets General (all bridge types)" shall apply.

Volume 3 – Structural Supports for Permanent Highway Signs and High Mast Lighting

(Follow the Latest AASHTO Standard Specifications for Structural Supports for Highway Signs, Luminaires, and Traffic Signals)

Volume 4 – Highway Safety

(Follow the Latest AASHTO Roadside Design Guidelines)

Volume 5 – Bridge Evaluation/Rating

(Follow the Latest AASHTO Manual for Bridge Evaluation and LADOTD Policies and Guidelines for Bridge Rating and Evaluation)

PART III

DESIGN AND DETAIL AIDS

CHAPTER 1 – LG GIRDER PRELIMINARY DESIGN CHARTS

TABLE OF CONTENTS

1.1—DESIGN ASSUMPTIONS 1
1.2—LG GIRDER DIMENSIONS, SECTION PROPERTIES, AND STRAND PATTERNS 3
1.3—FLEXURAL DESIGN - MAXIMUM ESTIMATED SPAN LENGTH 5
1.3.1—Moderate Corrosive Condition, f'_c = 8.5 ksi, f'_{ci} = 6.5 ksi 5
1.3.2—Moderate Corrosive Condition, f'_c = 10.0 ksi, f'_{ci} = 7.5 ksi 6
1.3.3—Severe Corrosive Condition, f'_c = 8.5 ksi, f'_{ci} = 6.5 ksi 7
1.3.4—Severe Corrosive Condition, f'_c = 10.0 ksi, f'_{ci} = 7.5 ksi 8
1.4—SHEAR DESIGN CHARTS 9
1.4.1—LG-25, Grade 60 Steel 9
1.4.2—LG-25, Grade 75 WWR 10
1.4.3—LG-36, Grade 60 Steel 11
1.4.4—LG-36, Grade 75 WWR 12
1.4.5—LG-45, Grade 60 Steel 13
1.4.6—LG-45, Grade 75 WWR 14
1.4.7—LG-54, Grade 60 Steel 15
1.4.8—LG-54, Grade 75 WWR 16
1.4.9—LG-63, Grade 60 Steel 17
1.4.10—LG-63, Grade 75 WWR 18
1.4.11—LG-72, Grade 60 Steel 19
1.4.12—LG-72, Grade 75 WWR 20
1.4.13—LG-78, Grade 60 Steel 21
1.4.14—LG-78, Grade 75 WWR 22

1.1—DESIGN ASSUMPTIONS

Design Specifications	*AASHTO LRFD Bridge Design Specifications*, 6th Edition with 2013 interim revisions.
Girder Concrete	f'_c = 8.5 ksi, f'_{ci} = 6.5 ksi, density for dead load = 155 lb/ft^3, density for modulus of elasticity = 148.5 lb/ft^3 f'_c = 10 ksi, f'_{ci} = 7.5 ksi, density for dead load = 155 lb/ft^3, density for modulus of elasticity = 150 lb/ft^3
Deck Concrete	f'_c = 4 ksi, density for dead load = 150 lb/ft^3, density for modulus of elasticity = 145 lb/ft^3
Minimum Concrete Cover	Bottom flange: 2". Top flange and girder web: 1.5"
Prestressing Strands	Grade 270, Low relaxation, 0.6" diameter, harped at 0.4L from the beam ends, no debonding, initial prestressing steel stress = 202.5 ksi (0.75 f_{pu})
Steel Reinforcement	Grade 60 rebar, f_y = 60 ksi Grade 75 WWR, f_y = 75 ksi (shear reinforcement only)
Live Load	LADV-11
Dead Load	- Future wearing surface = 25 psf - SIP form = 10 psf - Railing weight = 520 lb/ft each (assume 42 in. F type, total two railings). The railing weight is equally distributed over all beams. - Include intermediate diaphragm for spans greater than 120 ft according to *D5.13.2.2*.
Deck Thickness	8.5" total deck thickness with 0.5" sacrificial thickness
Gutter Line	1'-8" from the edge of deck (assume 42 in. F type barrier)
Haunch Thickness	- 2" at center of support for spans ≤ 90 ft, and 0.5" at midspan - 3" at center of support for spans from 90 to 120 ft, and 0.5" at midspan - 4" at center of support for spans ≥ 120 ft, and 0.5" at midspan Average haunch weight is considered in the analysis. Haunch thickness is ignored in the calculation of section properties.
Interior Girder Spacing	Varies from 6 - 12 feet
Exterior Girder Capacity	Non-composite section capacity of exterior girders shall not be less than that of interior girders to allow for future widening.
Overhang Length, L	2'-3" ≤ L ≤ ½ Interior girder spacing
Splitting Resistance at Girder End	Based on f_s = 20 ksi, A_s = total area of vertical reinforcement distributed within h/4 or 12 in., whichever is greater, from the girder ends.
Tensile Stress Limits at Service Limit State	$0.19\sqrt{f'_c}$ (ksi) or $6\sqrt{f'_c}$ (psi) for Moderate Corrosive Condition $0.0948\sqrt{f'_c}$ (ksi) or $3\sqrt{f'_c}$ (psi) for Severe Corrosive Condition

DESIGN ASSUMPTIONS (CONTINUED)

Tensile Stress Limit at Transfer	$0.0948\sqrt{f'_{ci}}$ (ksi) or $3\sqrt{f'_{ci}}$ (psi) $\leq$ 0.2 ksi
Prestress Losses	Use gross section and include elastic gains.
Camber and Deflection	Use PCI Multiplier method.
Shear Analysis	The shear reinforcement is designed to satisfy both the shear strength and interface shear. The general method is used in calculating the shear resistance. For interface shear, the concrete surface is assumed to be intentionally roughened with c = 0.24 ksi and μ = 1.0.
Girder Stability	Refer to *D5.14.1.2* for girder stability requirements.
Bridge Layout	Bridge model with 6 girders is studied for the determination of estimated maximum span length and simple span girders are used.

1.2—LG GIRDER DIMENSIONS, SECTION PROPERTIES, AND STRAND PATTERNS

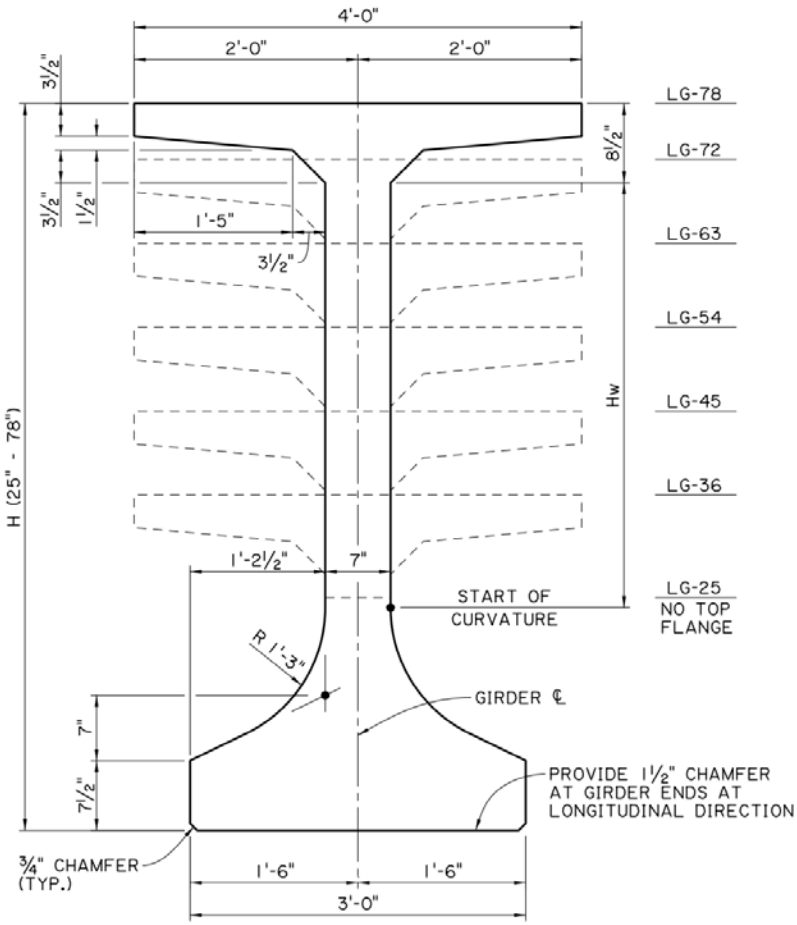

LG DIMENSIONS

GIRDER DIMENSIONS AND SECTION PROPERTIES										
GIRDER TYPE	H	Hw	Yt	Yb	AREA	Ix	Iy	St	Sb	WEIGHT
	(in.)	(in.)	(in.)	(in.)	(in.^{2})	(in.^{4})	(in.^{4})	(in.^{3})	(in.^{3})	(plf)
LG-25	25	1.08	16.46	8.54	524	19,944	38,636	1,212	2,335	564
LG-36	36	3.58	19.28	16.72	792	125,051	76,182	6,486	7,479	853
LG-45	45	12.58	24.51	20.49	855	222,491	76,439	9,078	10,859	920
LG-54	54	21.58	29.64	24.36	918	353,786	76,696	11,936	14,523	988
LG-63	63	30.58	34.69	28.31	981	521,638	76,954	15,037	18,426	1,056
LG-72	72	39.58	39.67	32.33	1,044	728,715	77,211	18,369	22,540	1,124
LG-78	78	45.58	42.96	35.04	1,086	889,863	77,382	20,714	25,396	1,169

NOTES:
1. UNIT WEIGHT USED IN CALCULATING GIRDER WEIGHT = 155 PCF.
2. GIRDER PROPERTIES CALCULATED BASED ON SIX SIGNIFICANT DIGITS AND FOUR DECIMAL PLACES.
3. Yt AND Yb ARE THE DISTANCE FROM THE CENTER OF GRAVITY OF THE GROSS SECTION TO THE EXTREME TOP FIBER AND EXTREME BOTTOM FIBER, RESPECTIVELY.
4. THE LISTED HEIGHT OF WEB (Hw) IS APPROXIMATE AND HAS BEEN ROUNDED TO THE SECOND DECIMAL PLACE.

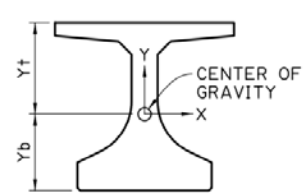

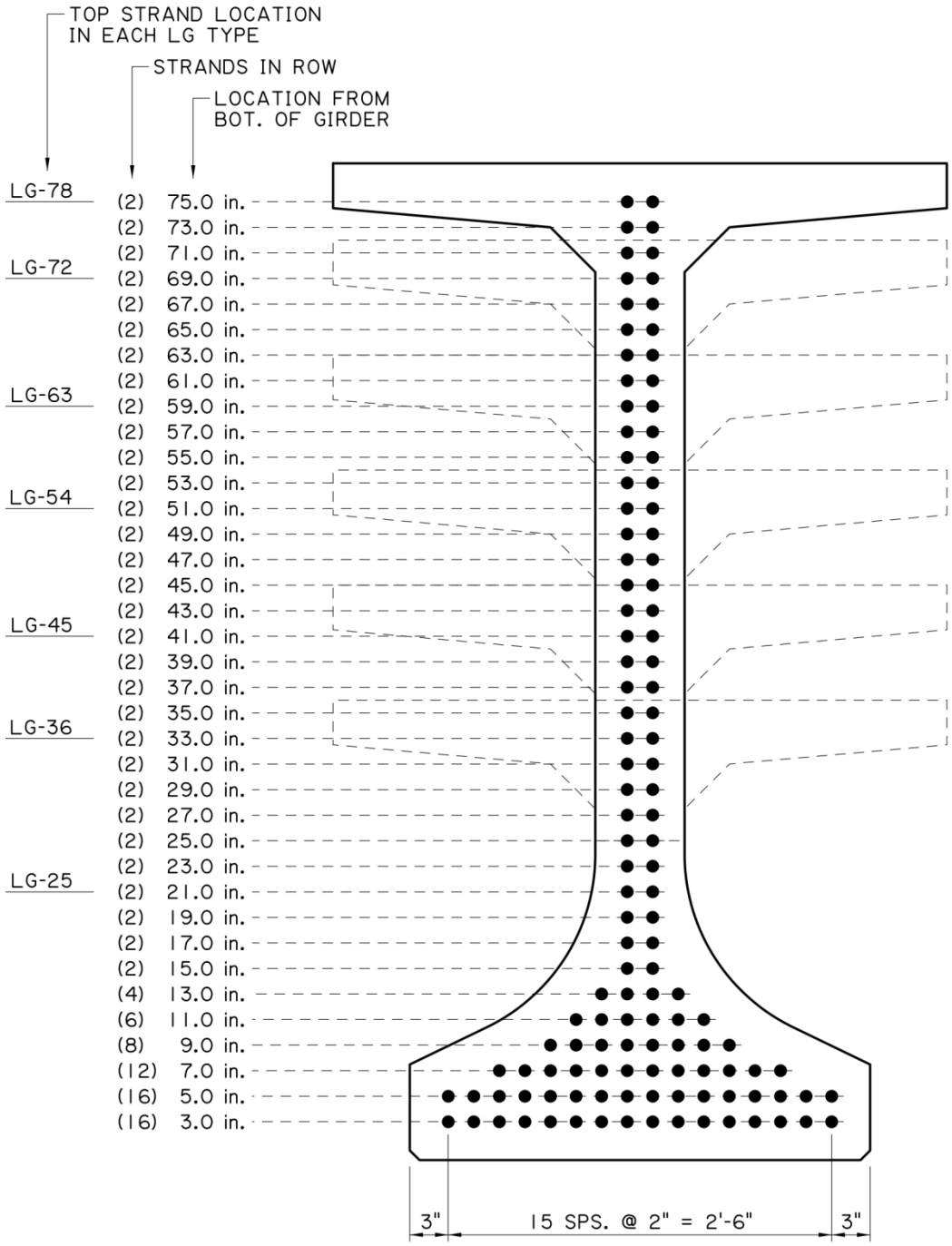

LG STRAND PATTERNS

1.3—FLEXURAL DESIGN - MAXIMUM ESTIMATED SPAN LENGTH

1.3.1—Moderate Corrosive Condition, f'_c = 8.5 ksi, f'_{ci} = 6.5 ksi

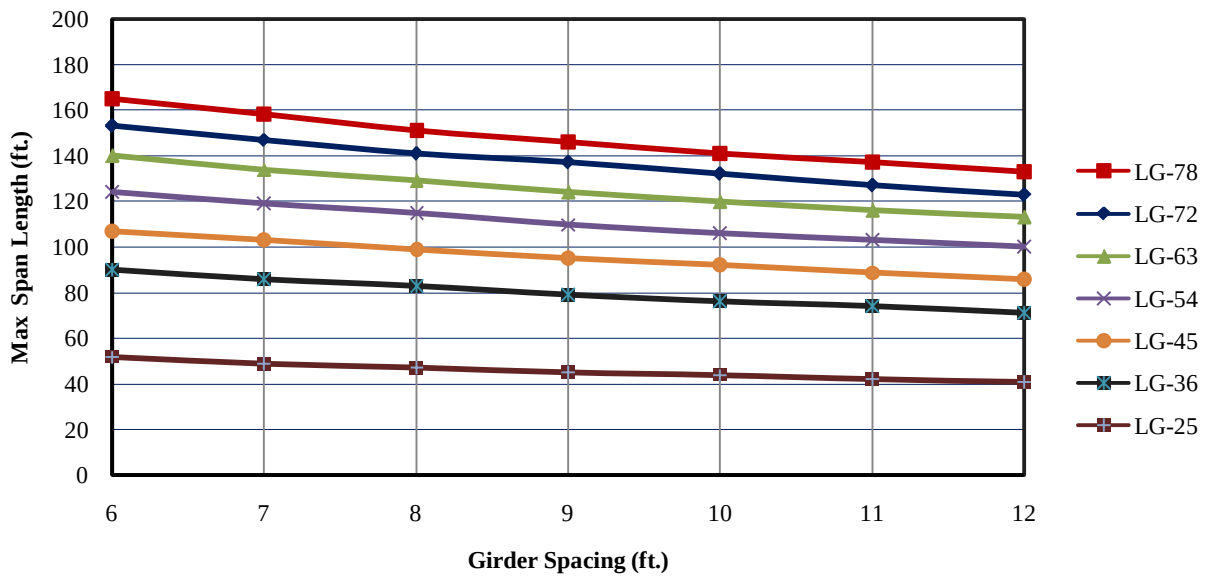

	Beam Spacing (ft.)	6	7	8	9	10	11	12
LG-78	Max. Number of Strands	58	58	58	58	58	58	58
	Max. Span Length (ft.)	165	158	151	146	141	137	133
	R.F. (Service III, Inv.)	1.00	1.01	1.03	1.01	1.01	1.01	1.01
	Maximum Overhang Length	3'-0"	3'-3"	3'-6"	3'-9"	4'-1"	4'-5"	4'-9"
LG-72	Max. Number of Strands	54	54	54	54	54	54	54
	Max. Span Length (ft.)	153	147	141	137	132	127	123
	R.F. (Service III, Inv.)	1.02	1.01	1.01	1.01	1.01	1.01	1.01
	Maximum Overhang Length	3'-0"	3'-4"	3'-6"	3'-8"	4'-0"	4'-5"	4'-9"
LG-63	Max. Number of Strands	52	52	52	52	52	52	52
	Max. Span Length (ft.)	140	134	129	124	120	116	113
	R.F. (Service III, Inv.)	1.02	1.02	1.01	1.01	1.02	1.02	1.02
	Maximum Overhang Length	3'-0"	3'-3"	3'-5"	3'-8"	3'-11"	4'-5"	4'-7"
LG-54	Max. Number of Strands	48	48	48	48	48	48	48
	Max. Span Length (ft.)	124	119	115	110	106	103	100
	R.F. (Service III, Inv.)	1.00	1.04	1.01	1.00	1.01	1.01	1.01
	Maximum Overhang Length	3'-0"	3'-3"	3'-4"	3'-8"	4'-0"	4'-3"	4'-6"
LG-45	Max. Number of Strands	44	44	44	44	44	44	44
	Max. Span Length (ft.)	107	103	99	95	92	89	86
	R.F. (Service III, Inv.)	1.05	1.01	1.01	1.01	1.01	1.01	1.01
	Maximum Overhang Length	3'-0"	3'-4"	3'-4"	3'-7"	3'-10"	4'-2"	4'-6"
LG-36	Max. Number of Strands	40	40	40	40	40	40	40
	Max. Span Length (ft.)	90	86	83	79	76	74	71
	R.F. (Service III, Inv.)	1.01	1.01	1.01	1.03	1.01	1.01	1.03
	Maximum Overhang Length	3'-0"	3'-4"	3'-4"	3'-7"	3'-11"	4'-2"	4'-5"
LG-25	Max. Number of Strands	32	32	32	32	32	32	32
	Max. Span Length (ft.)	50	48	46	44	43	41	40
	R.F. (Service III, Inv.)	1.36	1.32	1.25	1.25	1.23	1.24	1.20
	Maximum Overhang Length	3'-0"	3'-6"	3'-10"	4'-2"	4'-4"	4'-8"	4'-9"

1.3.2—Moderate Corrosive Condition, f'_c = 10.0 ksi, f'_{ci} = 7.5 ksi

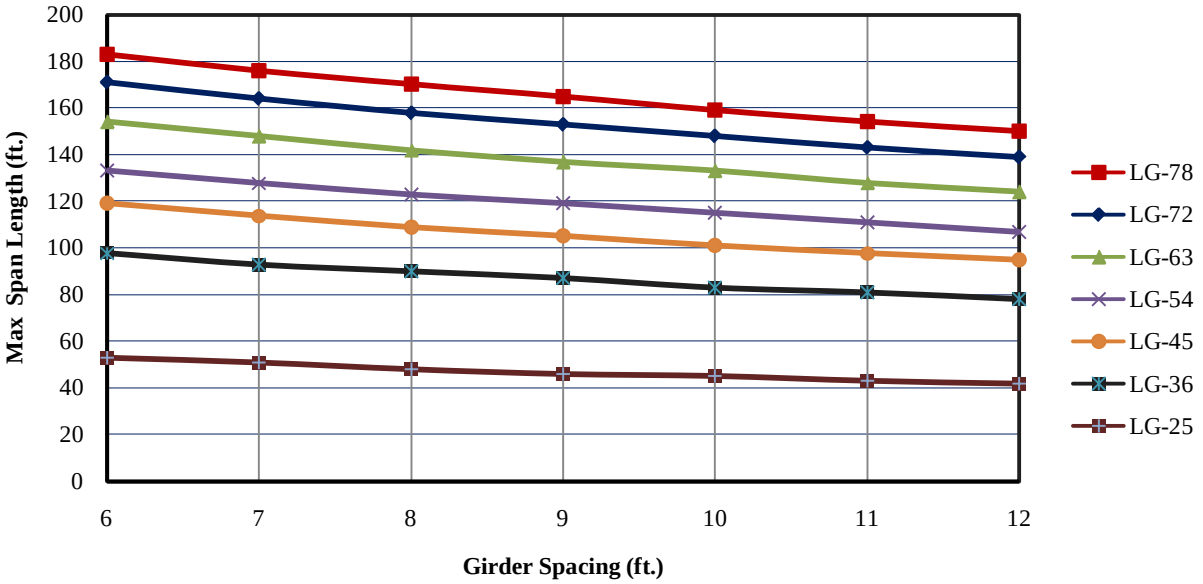

	Beam Spacing (ft.)	6	7	8	9	10	11	12
LG-78	Max. Number of Strands	76	76	76	76	76	76	76
	Max. Span Length (ft.)	183	176	170	165	159	154	150
	R.F. (Service III, Inv.)	1.03	1.03	1.03	1.01	1.01	1.01	1.02
	Maximum Overhang Length	3'-0"	3'-3"	3'-4"	3'-6"	3'-10"	4'-3"	4'-6"
LG-72	Max. Number of Strands	70	70	70	70	70	70	70
	Max. Span Length (ft.)	171	164	158	153	148	143	139
	R.F. (Service III, Inv.)	1.03	1.03	1.03	1.03	1.01	1.02	1.02
	Maximum Overhang Length	3'-0"	3'-3"	3'-4"	3'-6"	3'-9"	4'-3"	4'-9"
LG-63	Max. Number of Strands	64	64	64	64	64	64	64
	Max. Span Length (ft.)	154	148	142	137	133	128	124
	R.F. (Service III, Inv.)	1.02	1.01	1.02	1.01	1.02	1.01	1.01
	Maximum Overhang Length	3'-0"	3'-3"	3'-4"	3'-7"	3'-10"	4'-3"	4'-9"
LG-54	Max. Number of Strands	56	56	56	56	56	56	56
	Max. Span Length (ft.)	133	128	123	119	115	111	107
	R.F. (Service III, Inv.)	1.03	1.02	1.00	1.00	1.02	1.00	1.03
	Maximum Overhang Length	3'-0"	3'-3"	3'-5"	3'-6"	3'-9"	4'-3"	4'-6"
LG-45	Max. Number of Strands	54	54	54	54	54	54	54
	Max. Span Length (ft.)	119	114	109	105	101	98	95
	R.F. (Service III, Inv.)	1.01	1.00	1.01	1.01	1.01	1.00	1.00
	Maximum Overhang Length	3'-0"	3'-3"	3'-4"	3'-6"	3'-10"	4'-2"	4'-8"
LG-36	Max. Number of Strands	48	48	48	48	48	48	48
	Max. Span Length (ft.)	98	93	90	87	83	81	78
	R.F. (Service III, Inv.)	1.01	1.01	1.01	1.00	1.03	1.00	1.02
	Maximum Overhang Length	3'-0"	3'-3"	3'-3"	3'-5"	3'-9"	4'-1"	4'-4"
LG-25	Max. Number of Strands	32	32	32	32	32	32	32
	Max. Span Length (ft.)	53	51	48	46	45	43	42
	R.F. (Service III, Inv.)	1.21	1.17	1.19	1.20	1.18	1.18	1.12
	Maximum Overhang Length	3'-0"	3'-6"	3'-9"	4'-0"	4'-3"	4'-6"	4'-9"

1.3.3—Severe Corrosive Condition, f'_c = 8.5 ksi, f'_{ci} = 6.5 ksi

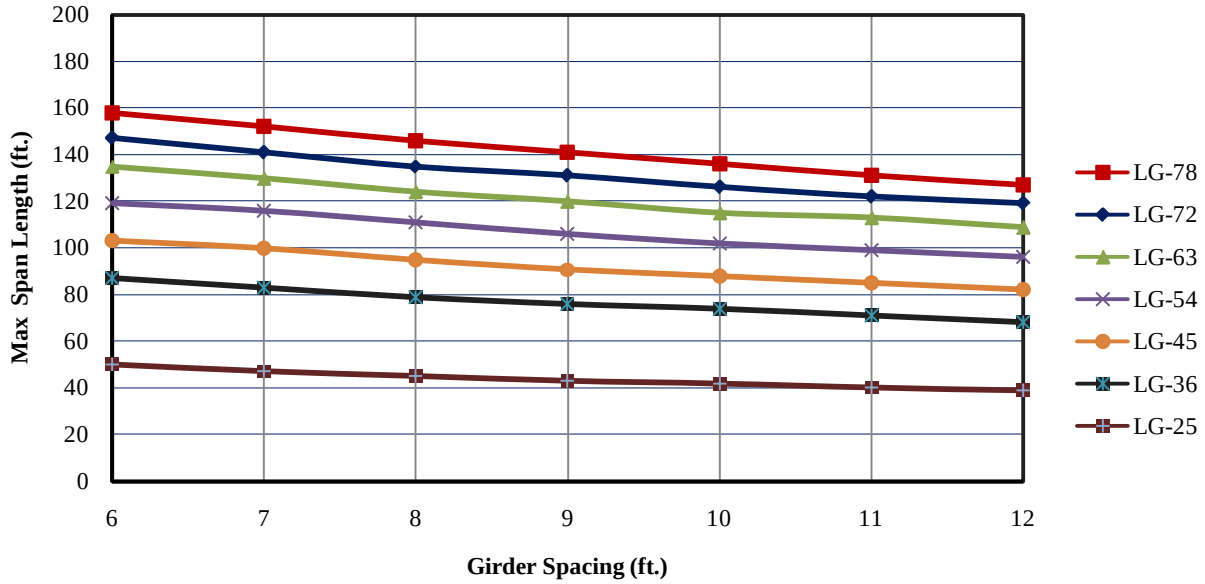

	Beam Spacing (ft.)	6	7	8	9	10	11	12
LG-78	Max. Number of Strands	58	58	58	58	58	58	58
	Max. Span Length (ft.)	158	152	146	141	136	131	127
	R.F. (Service III, Inv.)	1.03	1.01	1.02	1.00	1.03	1.02	1.02
	Maximum Overhang Length	3'-0"	3'-4"	3'-5"	3'-9"	4'-1"	4'-6"	4'-10"
LG-72	Max. Number of Strands	54	54	54	54	54	54	54
	Max. Span Length (ft.)	147	141	135	131	126	122	119
	R.F. (Service III, Inv.)	1.02	1.01	1.03	1.00	1.02	1.00	1.02
	Maximum Overhang Length	3'-0"	3'-3"	3'-6"	3'-8"	4'-0"	4'-6"	4'-8"
LG-63	Max. Number of Strands	52	52	52	52	52	52	52
	Max. Span Length (ft.)	135	130	124	120	115	113	109
	R.F. (Service III, Inv.)	1.02	1.01	1.01	1.01	1.05	1.00	1.02
	Maximum Overhang Length	3'-0"	3'-3"	3'-5"	3'-7"	3'-11"	4'-4"	4'-6"
LG-54	Max. Number of Strands	48	48	48	48	48	48	48
	Max. Span Length (ft.)	119	116	111	106	102	99	96
	R.F. (Service III, Inv.)	1.05	1.01	1.00	1.02	1.03	1.01	1.01
	Maximum Overhang Length	3'-0"	3'-3"	3'-5"	3'-7"	3'-9"	4'-3"	4'-6"
LG-45	Max. Number of Strands	44	44	44	44	44	44	44
	Max. Span Length (ft.)	103	100	95	91	88	85	82
	R.F. (Service III, Inv.)	1.04	1.03	1.01	1.04	1.01	1.00	1.01
	Maximum Overhang Length	3'-0"	3'-4"	3'-5"	3'-7"	3'-11"	4'-4"	4'-7"
LG-36	Max. Number of Strands	40	40	40	40	40	40	40
	Max. Span Length (ft.)	87	83	79	76	74	71	68
	R.F. (Service III, Inv.)	1.00	1.00	1.03	1.02	1.00	1.00	1.02
	Maximum Overhang Length	3'-0"	3'-3"	3'-4"	3'-7"	3'-9"	4'-3"	4'-4"
LG-25	Max. Number of Strands	32	32	32	32	32	32	32
	Max. Span Length (ft.)	50	47	45	43	42	40	39
	R.F. (Service III, Inv.)	1.16	1.22	1.21	1.20	1.17	1.18	1.15
	Maximum Overhang Length	3'-0"	3'-6"	3'-8"	4'-1"	4'-3"	4'-6"	4'-7"

1.3.4—Severe Corrosive Condition, f'_c = 10.0 ksi, f'_{ci} = 7.5 ksi

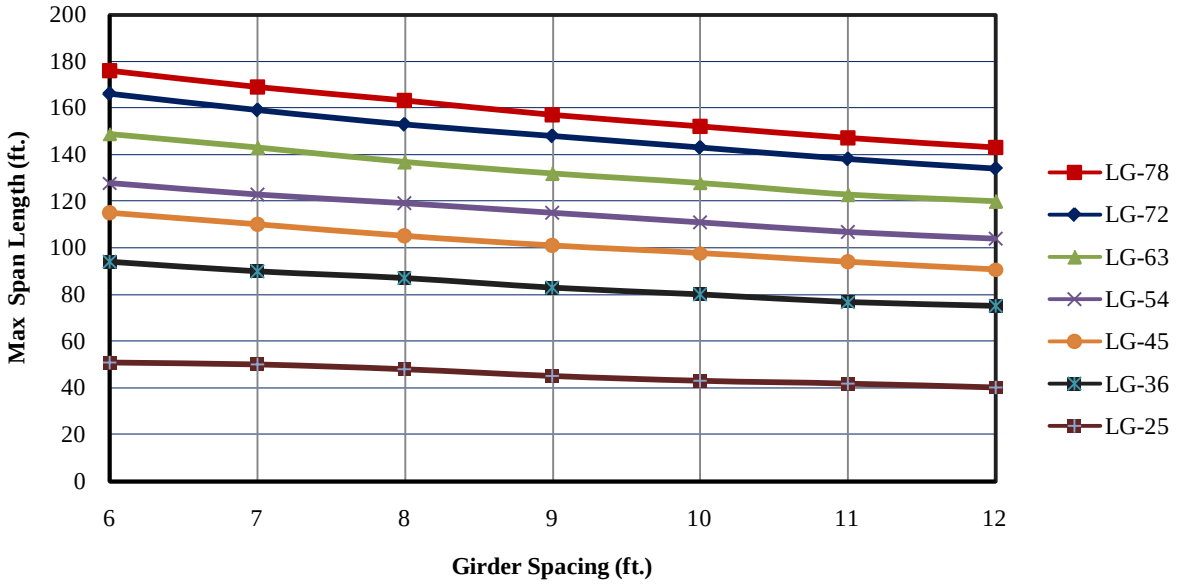

	Beam Spacing (ft.)	6	7	8	9	10	11	12
LG-78	Max. Number of Strands	74	74	74	74	74	74	74
	Max. Span Length (ft.)	176	169	163	157	152	147	143
	R.F. (Service III, Inv.)	1.02	1.02	1.01	1.02	1.02	1.03	1.02
	Maximum Overhang Length	3'-0"	3'-3"	3'-4"	3'-6"	3'-10"	4'-3"	4'-6"
LG-72	Max. Number of Strands	70	70	70	70	70	70	70
	Max. Span Length (ft.)	166	159	153	148	143	138	134
	R.F. (Service III, Inv.)	1.00	1.01	1.01	1.00	1.00	1.02	1.02
	Maximum Overhang Length	3'-0"	3'-3"	3'-4"	3'-6"	3'-9"	4'-3"	4'-8"
LG-63	Max. Number of Strands	64	64	64	64	64	64	64
	Max. Span Length (ft.)	149	143	137	132	128	123	120
	R.F. (Service III, Inv.)	1.01	1.00	1.02	1.02	1.02	1.03	1.01
	Maximum Overhang Length	3'-0"	3'-3"	3'-4"	3'-6"	3'-9"	4'-3"	4'-6"
LG-54	Max. Number of Strands	56	56	56	56	56	56	56
	Max. Span Length (ft.)	128	123	119	115	111	107	104
	R.F. (Service III, Inv.)	1.03	1.01	1.01	1.01	1.01	1.01	1.01
	Maximum Overhang Length	3'-0"	3'-4"	3'-5"	3'-6"	3'-10"	4'-3"	4'-6"
LG-45	Max. Number of Strands	54	54	54	54	54	54	54
	Max. Span Length (ft.)	115	110	105	101	98	94	91
	R.F. (Service III, Inv.)	1.00	1.00	1.02	1.02	1.00	1.01	1.01
	Maximum Overhang Length	3'-0"	3'-3"	3'-4"	3'-6"	3'-1	4'-3"	4'-7"
LG-36	Max. Number of Strands	48	48	48	48	48	48	48
	Max. Span Length (ft.)	94	90	87	83	80	77	75
	R.F. (Service III, Inv.)	1.03	1.00	1.00	1.03	1.03	1.02	1.02
	Maximum Overhang Length	3'-0"	3'-4"	3'-4"	3'-6"	3'-9"	4'-3"	4'-4"
LG-25	Max. Number of Strands	32	32	32	32	32	32	32
	Max. Span Length (ft.)	51	50	48	45	43	42	40
	R.F. (Service III, Inv.)	1.16	1.18	1.13	1.15	1.14	1.12	1.13
	Maximum Overhang Length	3'-0"	3'-6"	3'-9"	4'-2"	4'-4"	4'-6"	4'-8"

1.4—SHEAR DESIGN CHARTS

1.4.1—LG-25, Grade 60 Steel

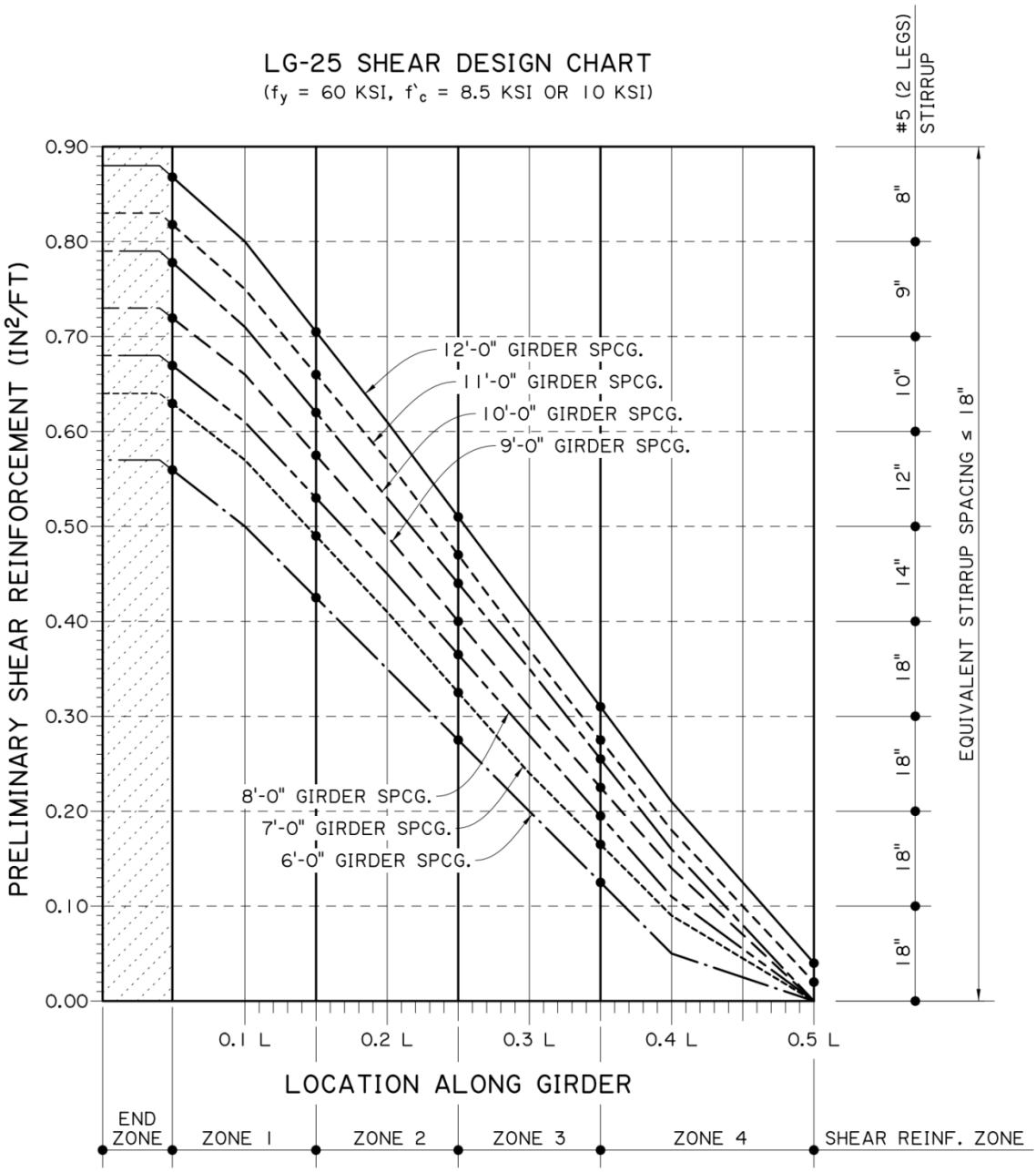

NOTES:
1. "L" IS THE GIRDER LENGTH FROM CENTER OF BEARING TO CENTER OF BEARING.
2. THE REQUIRED SHEAR REINFORCEMENT IN THIS CHART IS BASED ON THE MAXIMUM ESTIMATED SPAN LENGTHS IN SECTION 1.3.1 AND 1.3.2. FOR LG-25 ONLY, ADD ADDITIONAL AMOUNT OF REINFORCEMENT EQUAL TO THOSE SHOWN IN THE DESIGN CHART TO SATISFY INTERFACE SHEAR REQUIREMENT.
3. END ZONE IS DEFINED AS THE DISTANCE FROM END OF GIRDER TO THE BEGINNING OF ZONE 1 AND THIS DISTANCE IS TYPICALLY AROUND 1.5 TIMES OF GIRDER DEPTH "H". THE REINFORCEMENT IN END ZONE SHALL BE PROVIDED BY DESIGNER.

1.4.2—LG-25, Grade 75 WWR

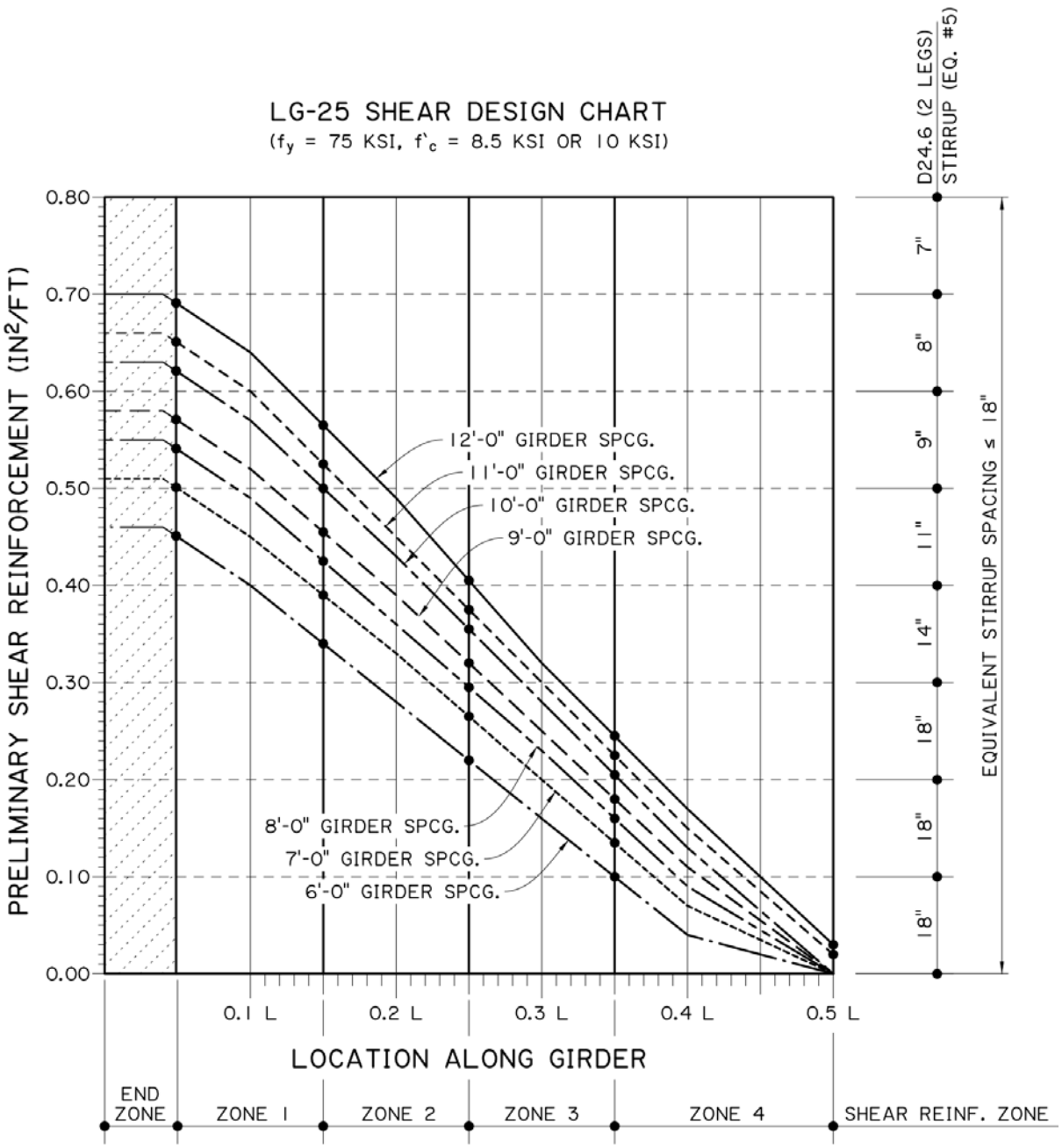

NOTES:

1. "L" IS THE GIRDER LENGTH FROM CENTER OF BEARING TO CENTER OF BEARING.
2. THE REQUIRED SHEAR REINFORCEMENT IN THIS CHART IS BASED ON THE MAXIMUM ESTIMATED SPAN LENGTHS IN SECTION 1.3.1 AND 1.3.2. FOR LG-25 ONLY, ADD ADDITIONAL AMOUNT OF REINFORCEMENT EQUAL TO THOSE SHOWN IN THE DESIGN CHART TO SATISFY INTERFACE SHEAR REQUIREMENT.
3. END ZONE IS DEFINED AS THE DISTANCE FROM END OF GIRDER TO THE BEGINNING OF ZONE 1 AND THIS DISTANCE IS TYPICALLY AROUND 1.5 TIMES OF GIRDER DEPTH "H". THE REINFORCEMENT IN END ZONE SHALL BE PROVIDED BY DESIGNER.

1.4.3—LG-36, Grade 60 Steel

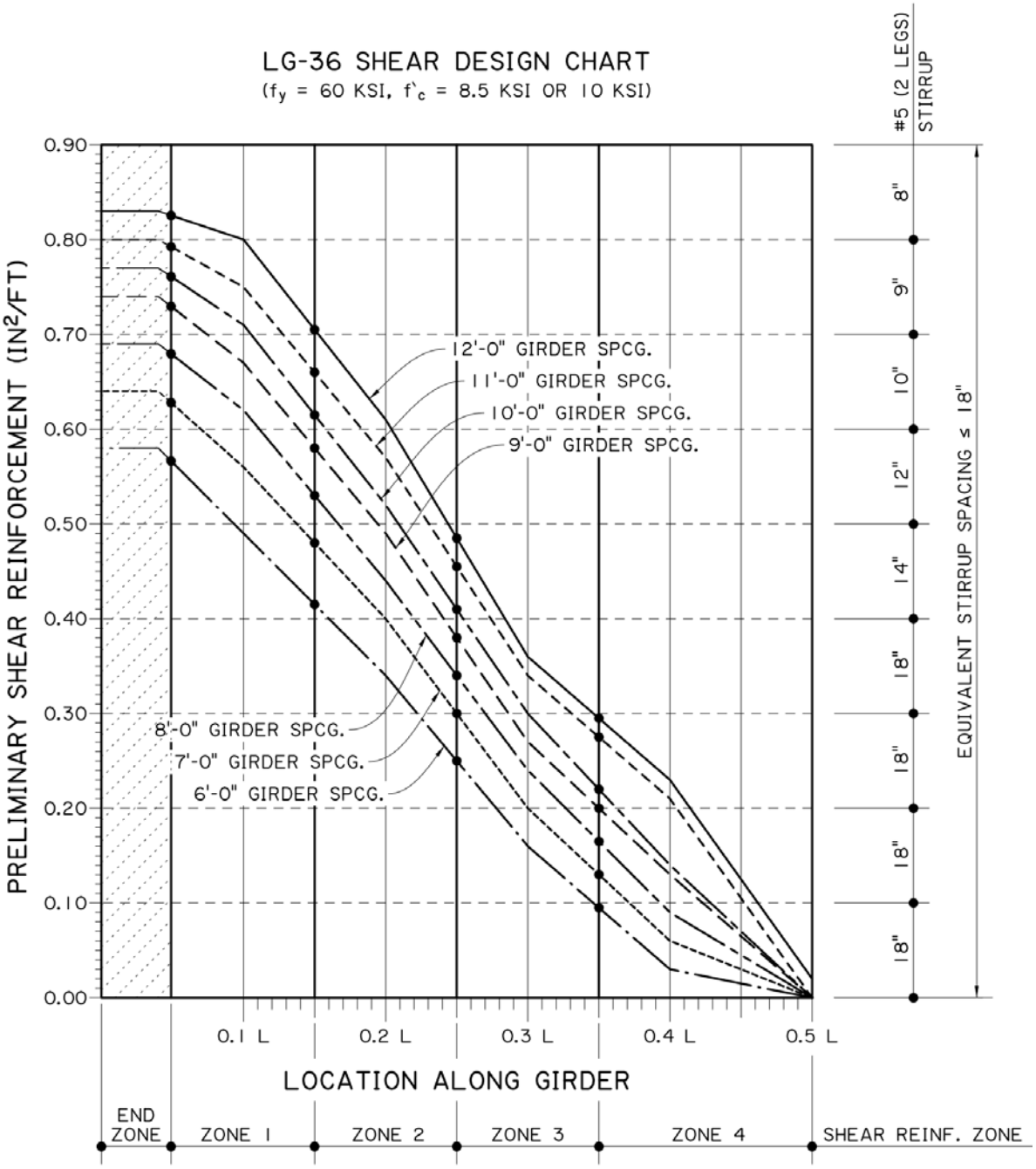

NOTES:
1. "L" IS THE GIRDER LENGTH FROM CENTER OF BEARING TO CENTER OF BEARING.
2. THE REQUIRED SHEAR REINFORCEMENT IN THIS CHART IS BASED ON THE MAXIMUM ESTIMATED SPAN LENGTHS IN SECTION 1.3.1 AND 1.3.2.
3. END ZONE IS DEFINED AS THE DISTANCE FROM END OF GIRDER TO THE BEGINNING OF ZONE 1 AND THIS DISTANCE IS TYPICALLY AROUND 1.5 TIMES OF GIRDER DEPTH "H". THE REINFORCEMENT IN END ZONE SHALL BE PROVIDED BY DESIGNER.

1.4.4—LG-36, Grade 75 WWR

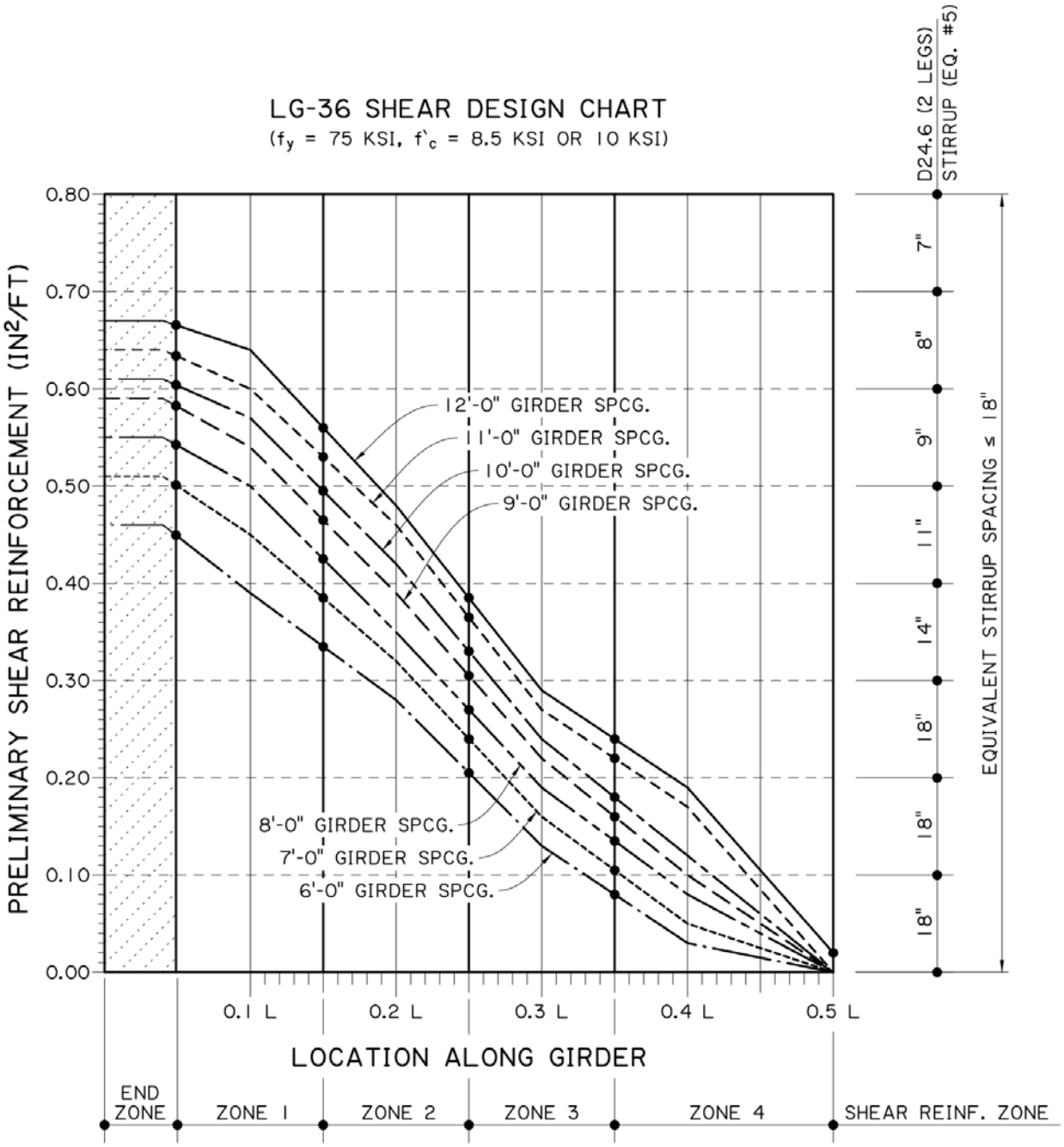

NOTES:
1. "L" IS THE GIRDER LENGTH FROM CENTER OF BEARING TO CENTER OF BEARING.
2. THE REQUIRED SHEAR REINFORCEMENT IN THIS CHART IS BASED ON THE MAXIMUM ESTIMATED SPAN LENGTHS IN SECTION 1.3.1 AND 1.3.2.
3. END ZONE IS DEFINED AS THE DISTANCE FROM END OF GIRDER TO THE BEGINNING OF ZONE 1 AND THIS DISTANCE IS TYPICALLY AROUND 1.5 TIMES OF GIRDER DEPTH "H". THE REINFORCEMENT IN END ZONE SHALL BE PROVIDED BY DESIGNER.

1.4.5—LG-45, Grade 60 Steel

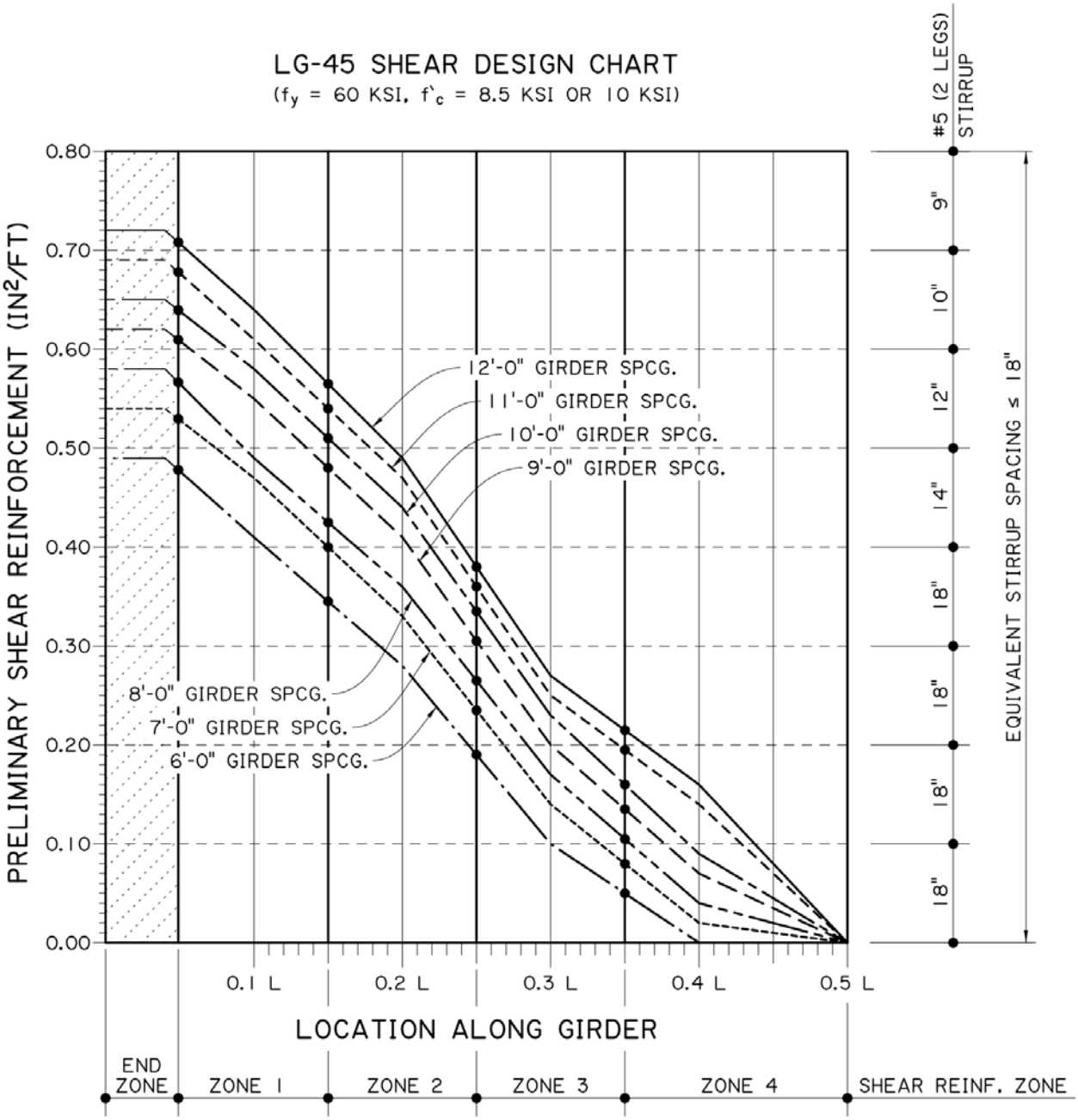

NOTES:
1. "L" IS THE GIRDER LENGTH FROM CENTER OF BEARING TO CENTER OF BEARING.
2. THE REQUIRED SHEAR REINFORCEMENT IN THIS CHART IS BASED ON THE MAXIMUM ESTIMATED SPAN LENGTHS IN SECTION 1.3.1 AND 1.3.2.
3. END ZONE IS DEFINED AS THE DISTANCE FROM END OF GIRDER TO THE BEGINNING OF ZONE 1 AND THIS DISTANCE IS TYPICALLY AROUND 1.5 TIMES OF GIRDER DEPTH "H". THE REINFORCEMENT IN END ZONE SHALL BE PROVIDED BY DESIGNER.

1.4.6—LG-45, Grade 75 WWR

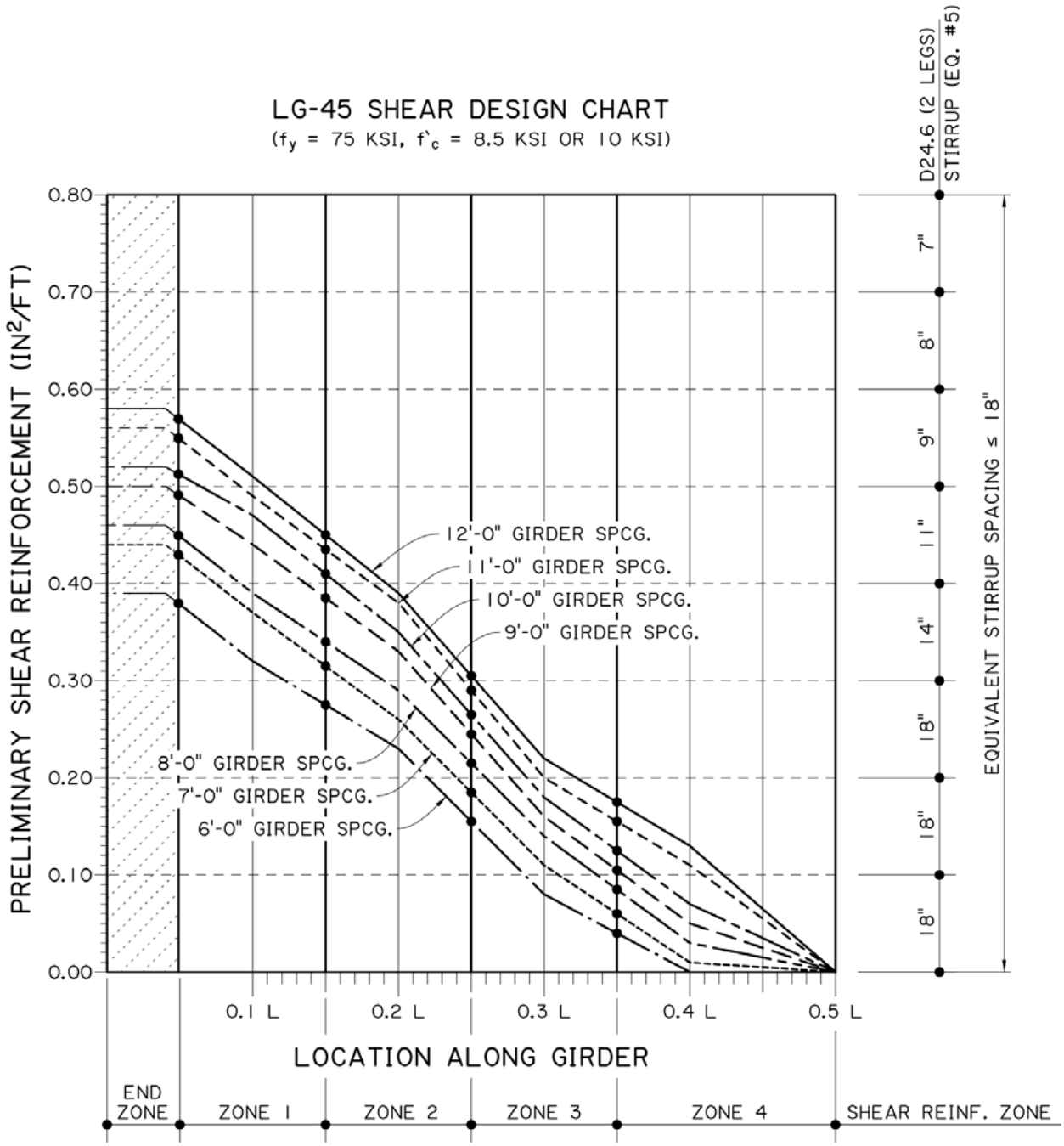

NOTES:
1. "L" IS THE GIRDER LENGTH FROM CENTER OF BEARING TO CENTER OF BEARING.
2. THE REQUIRED SHEAR REINFORCEMENT IN THIS CHART IS BASED ON THE MAXIMUM ESTIMATED SPAN LENGTHS IN SECTION 1.3.1 AND 1.3.2.
3. END ZONE IS DEFINED AS THE DISTANCE FROM END OF GIRDER TO THE BEGINNING OF ZONE 1 AND THIS DISTANCE IS TYPICALLY AROUND 1.5 TIMES OF GIRDER DEPTH "H". THE REINFORCEMENT IN END ZONE SHALL BE PROVIDED BY DESIGNER.

1.4.7—LG-54, Grade 60 Steel

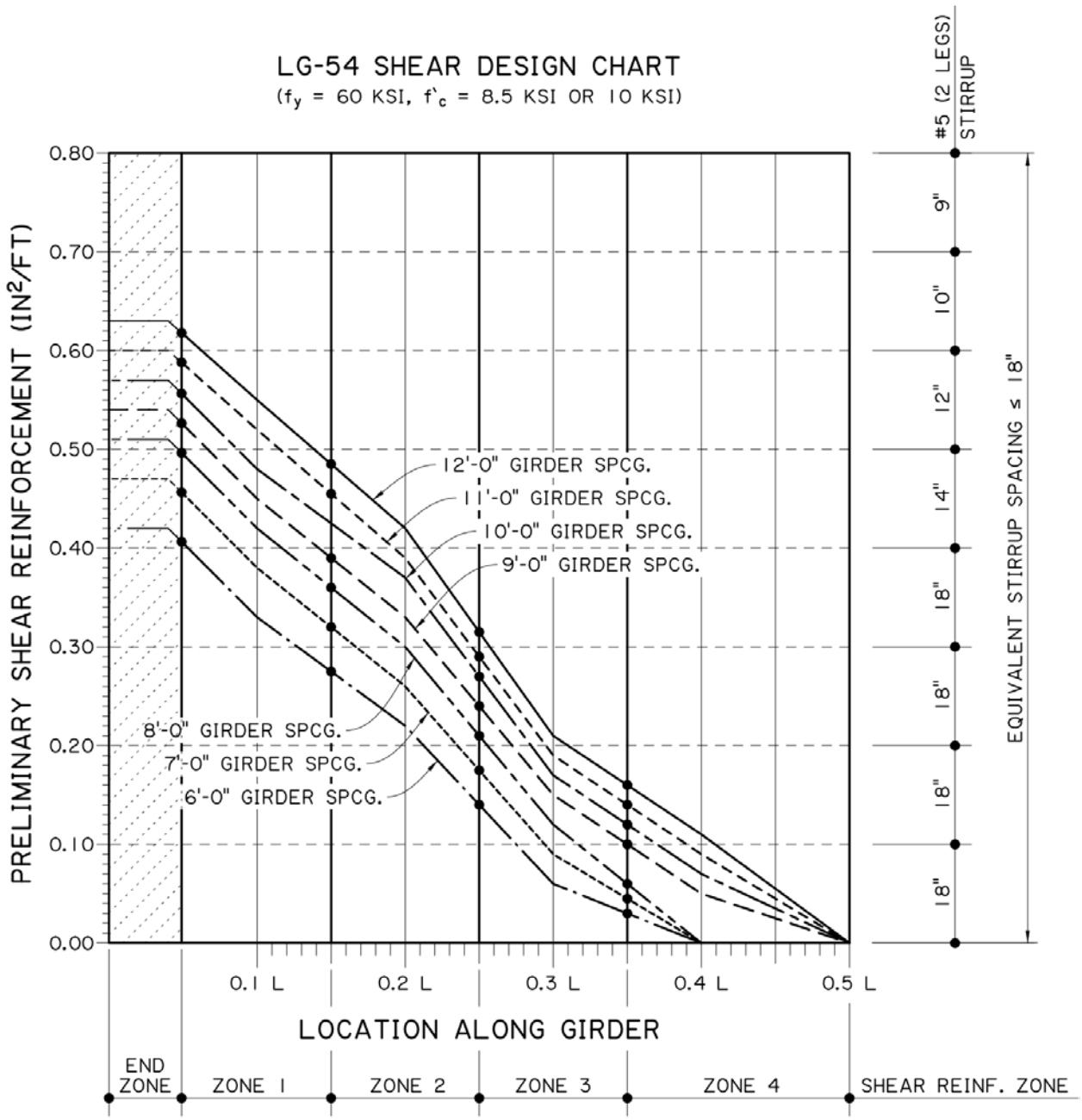

NOTES:
1. "L" IS THE GIRDER LENGTH FROM CENTER OF BEARING TO CENTER OF BEARING.
2. THE REQUIRED SHEAR REINFORCEMENT IN THIS CHART IS BASED ON THE MAXIMUM ESTIMATED SPAN LENGTHS IN SECTION 1.3.1 AND 1.3.2.
3. END ZONE IS DEFINED AS THE DISTANCE FROM END OF GIRDER TO THE BEGINNING OF ZONE 1 AND THIS DISTANCE IS TYPICALLY AROUND 1.5 TIMES OF GIRDER DEPTH "H". THE REINFORCEMENT IN END ZONE SHALL BE PROVIDED BY DESIGNER.

1.4.8—LG-54, Grade 75 WWR

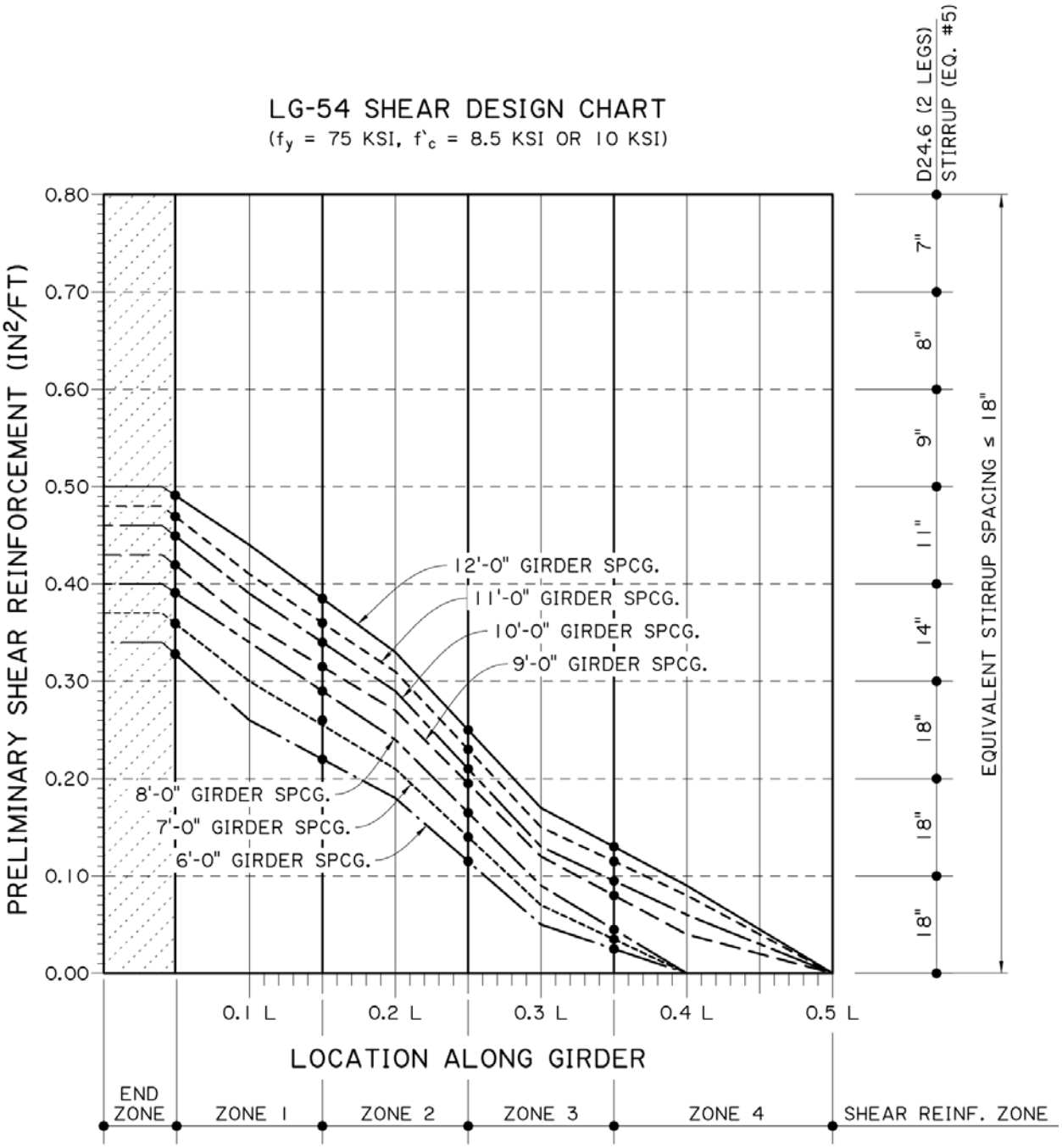

NOTES:
1. "L" IS THE GIRDER LENGTH FROM CENTER OF BEARING TO CENTER OF BEARING.
2. THE REQUIRED SHEAR REINFORCEMENT IN THIS CHART IS BASED ON THE MAXIMUM ESTIMATED SPAN LENGTHS IN SECTION 1.3.1 AND 1.3.2.
3. END ZONE IS DEFINED AS THE DISTANCE FROM END OF GIRDER TO THE BEGINNING OF ZONE 1 AND THIS DISTANCE IS TYPICALLY AROUND 1.5 TIMES OF GIRDER DEPTH "H". THE REINFORCEMENT IN END ZONE SHALL BE PROVIDED BY DESIGNER.

1.4.9—LG-63, Grade 60 Steel

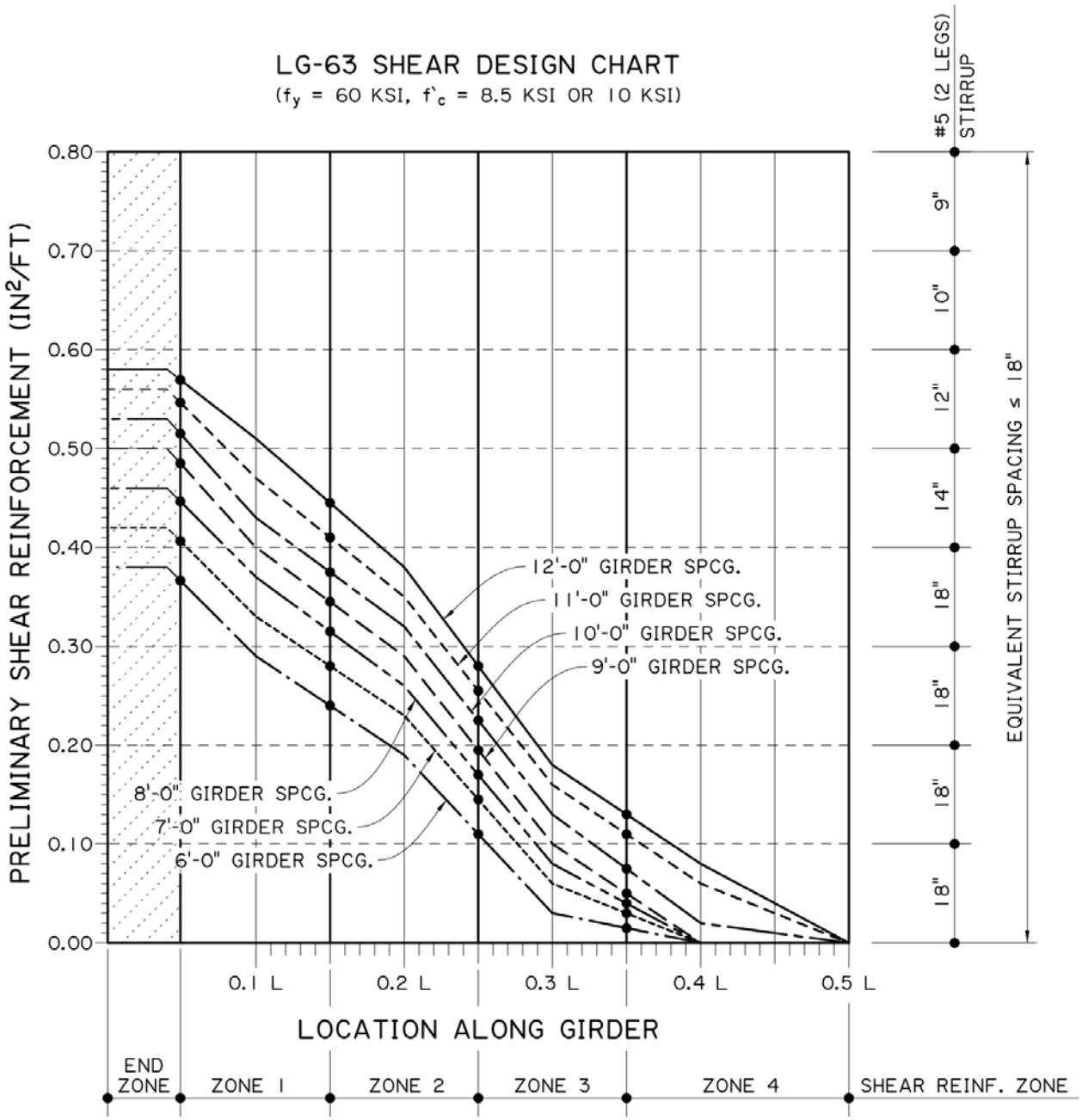

NOTES:
1. "L" IS THE GIRDER LENGTH FROM CENTER OF BEARING TO CENTER OF BEARING.
2. THE REQUIRED SHEAR REINFORCEMENT IN THIS CHART IS BASED ON THE MAXIMUM ESTIMATED SPAN LENGTHS IN SECTION 1.3.1 AND 1.3.2.
3. END ZONE IS DEFINED AS THE DISTANCE FROM END OF GIRDER TO THE BEGINNING OF ZONE 1 AND THIS DISTANCE IS TYPICALLY AROUND 1.5 TIMES OF GIRDER DEPTH "H". THE REINFORCEMENT IN END ZONE SHALL BE PROVIDED BY DESIGNER.

1.4.10—LG-63, Grade 75 WWR

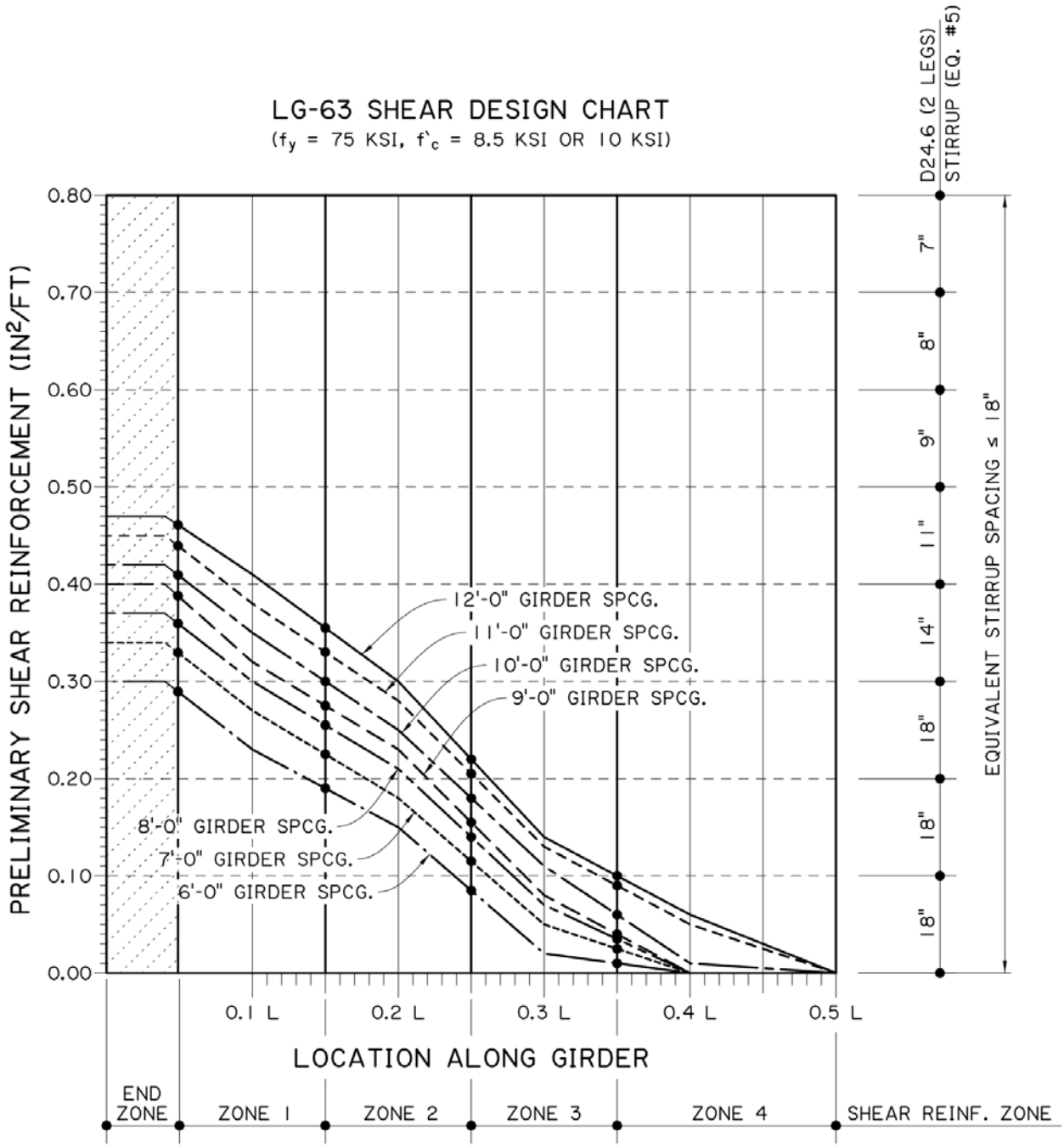

NOTES:
1. "L" IS THE GIRDER LENGTH FROM CENTER OF BEARING TO CENTER OF BEARING.
2. THE REQUIRED SHEAR REINFORCEMENT IN THIS CHART IS BASED ON THE MAXIMUM ESTIMATED SPAN LENGTHS IN SECTION 1.3.1 AND 1.3.2.
3. END ZONE IS DEFINED AS THE DISTANCE FROM END OF GIRDER TO THE BEGINNING OF ZONE 1 AND THIS DISTANCE IS TYPICALLY AROUND 1.5 TIMES OF GIRDER DEPTH "H". THE REINFORCEMENT IN END ZONE SHALL BE PROVIDED BY DESIGNER.

1.4.11—LG-72, Grade 60 Steel

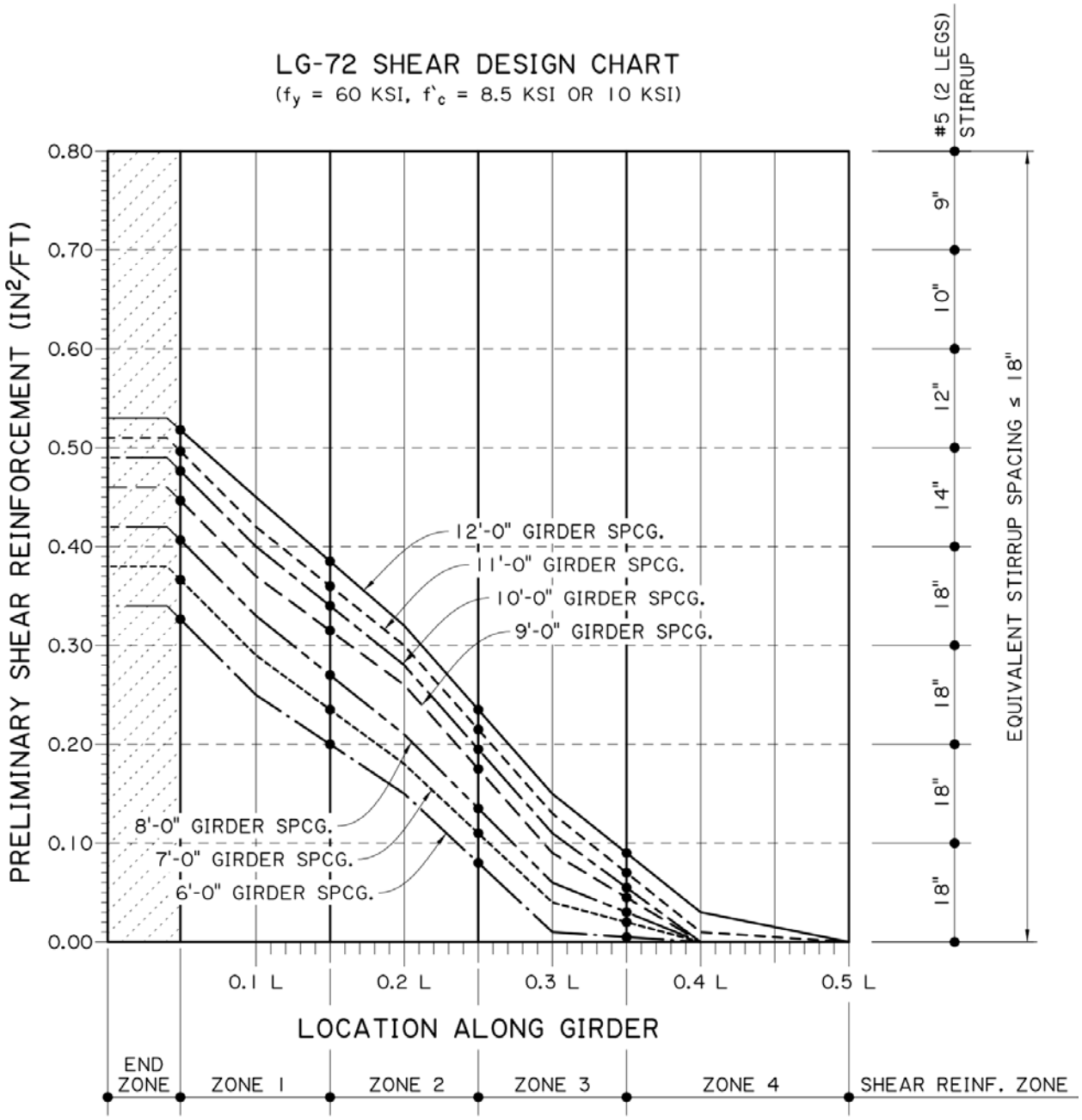

NOTES:
1. "L" IS THE GIRDER LENGTH FROM CENTER OF BEARING TO CENTER OF BEARING.
2. THE REQUIRED SHEAR REINFORCEMENT IN THIS CHART IS BASED ON THE MAXIMUM ESTIMATED SPAN LENGTHS IN SECTION 1.3.1 AND 1.3.2.
3. END ZONE IS DEFINED AS THE DISTANCE FROM END OF GIRDER TO THE BEGINNING OF ZONE 1 AND THIS DISTANCE IS TYPICALLY AROUND 1.5 TIMES OF GIRDER DEPTH "H". THE REINFORCEMENT IN END ZONE SHALL BE PROVIDED BY DESIGNER.

1.4.12—LG-72, Grade 75 WWR

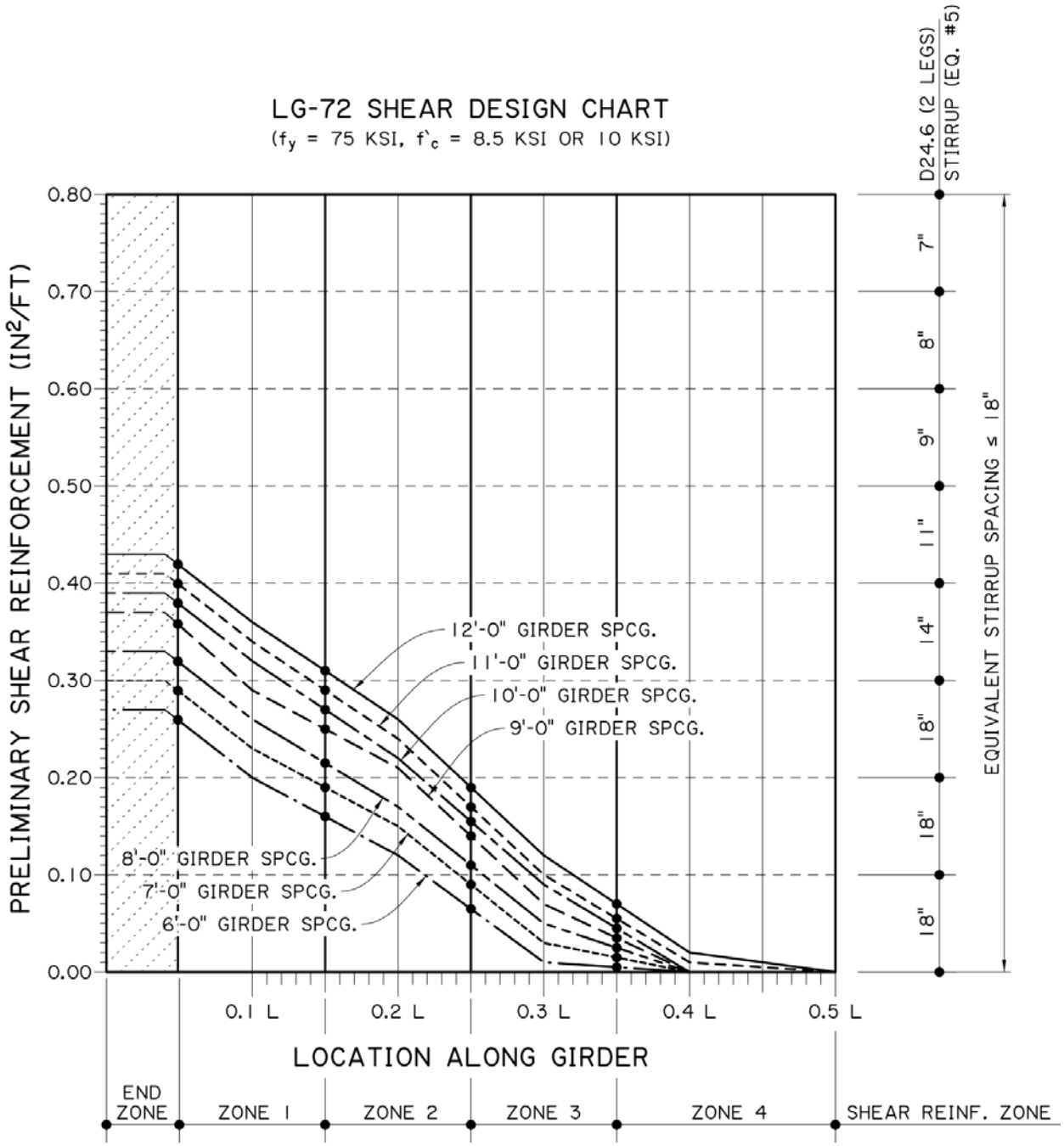

NOTES:
1. "L" IS THE GIRDER LENGTH FROM CENTER OF BEARING TO CENTER OF BEARING.
2. THE REQUIRED SHEAR REINFORCEMENT IN THIS CHART IS BASED ON THE MAXIMUM ESTIMATED SPAN LENGTHS IN SECTION 1.3.1 AND 1.3.2.
3. END ZONE IS DEFINED AS THE DISTANCE FROM END OF GIRDER TO THE BEGINNING OF ZONE 1 AND THIS DISTANCE IS TYPICALLY AROUND 1.5 TIMES OF GIRDER DEPTH "H". THE REINFORCEMENT IN END ZONE SHALL BE PROVIDED BY DESIGNER.

1.4.13—LG-78, Grade 60 Steel

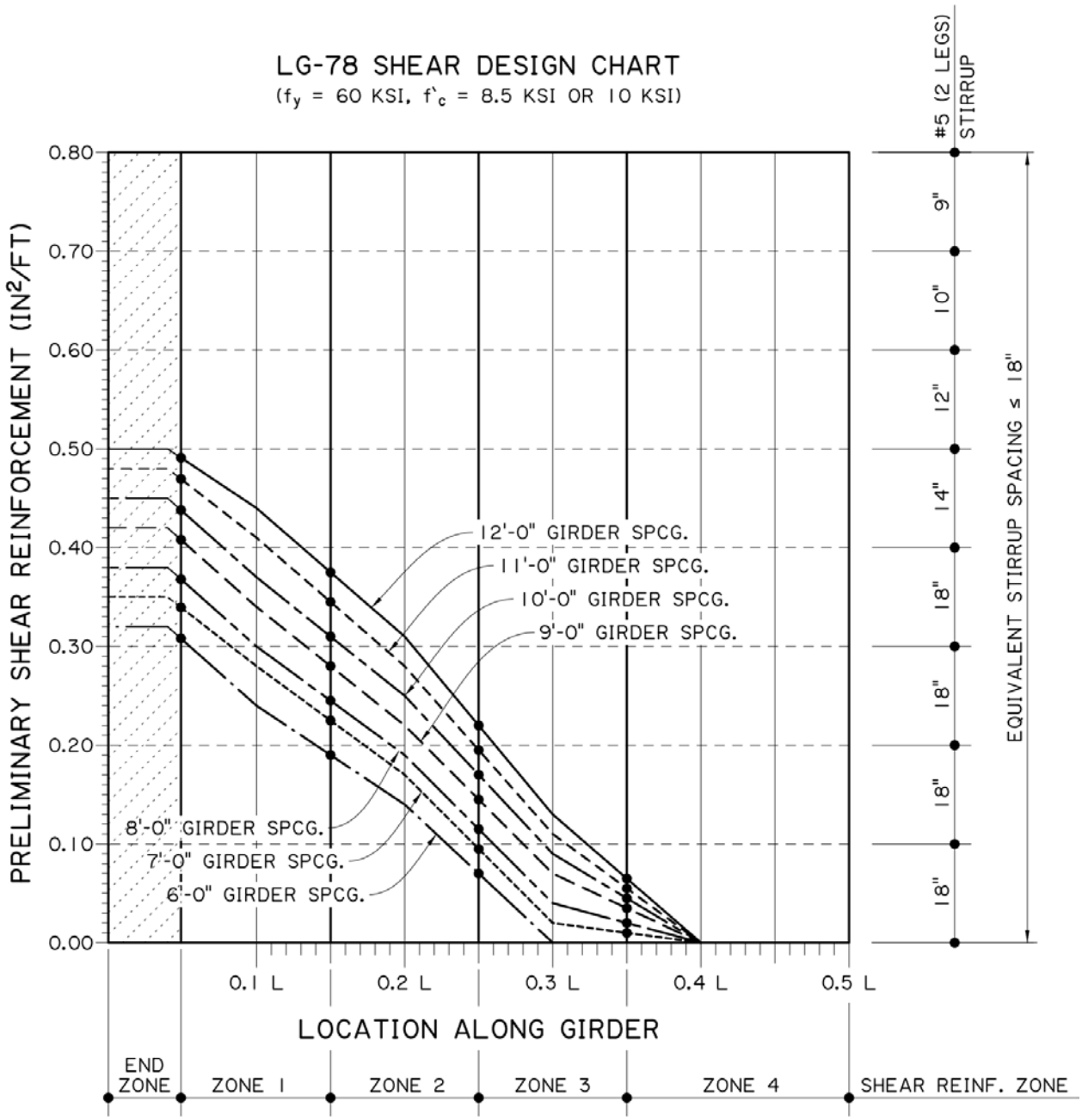

NOTES:
1. "L" IS THE GIRDER LENGTH FROM CENTER OF BEARING TO CENTER OF BEARING.
2. THE REQUIRED SHEAR REINFORCEMENT IN THIS CHART IS BASED ON THE MAXIMUM ESTIMATED SPAN LENGTHS IN SECTION 1.3.1 AND 1.3.2.
3. END ZONE IS DEFINED AS THE DISTANCE FROM END OF GIRDER TO THE BEGINNING OF ZONE 1 AND THIS DISTANCE IS TYPICALLY AROUND 1.5 TIMES OF GIRDER DEPTH "H". THE REINFORCEMENT IN END ZONE SHALL BE PROVIDED BY DESIGNER.

1.4.14—LG-78, Grade 75 WWR

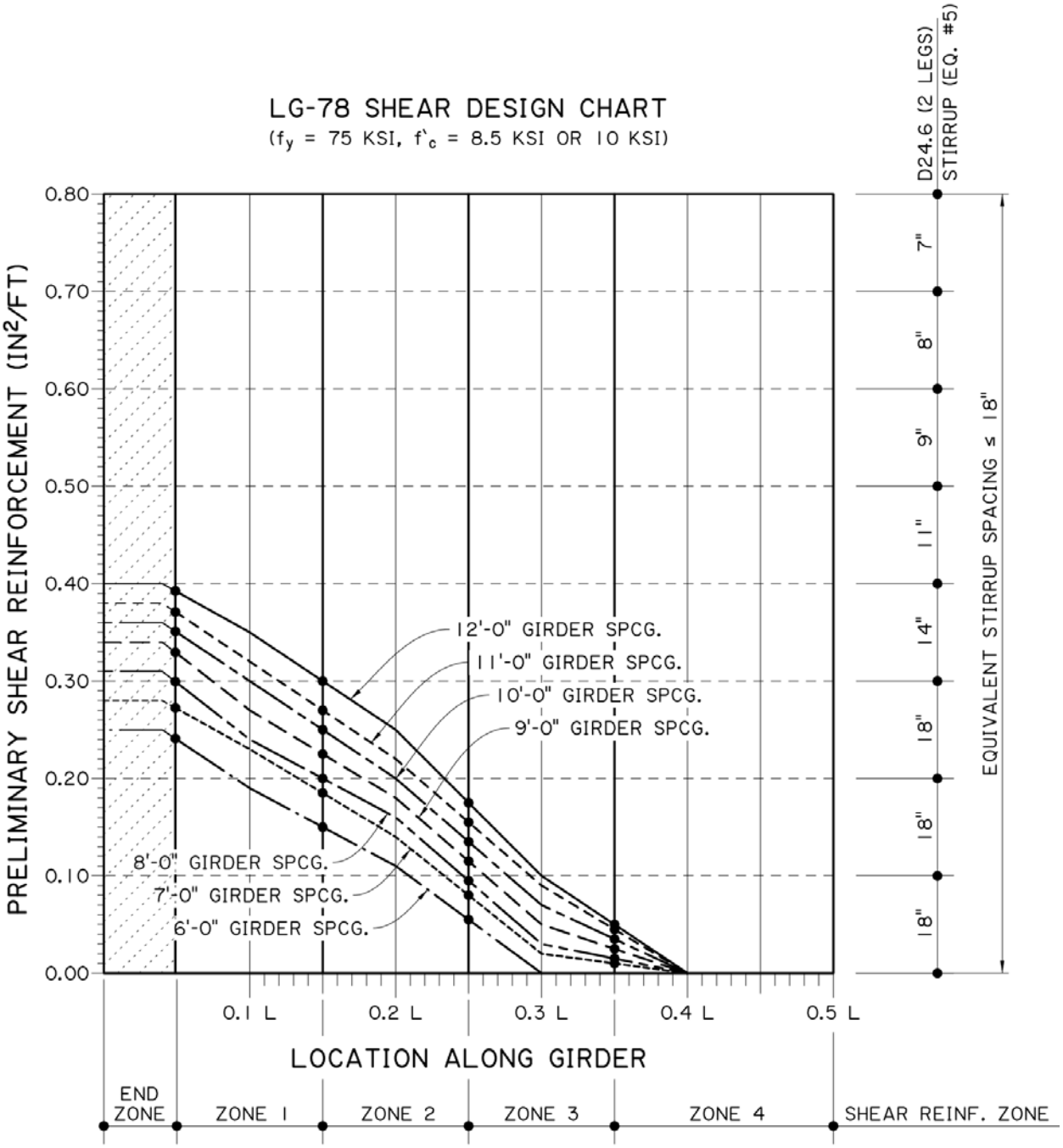

NOTES:
1. "L" IS THE GIRDER LENGTH FROM CENTER OF BEARING TO CENTER OF BEARING.
2. THE REQUIRED SHEAR REINFORCEMENT IN THIS CHART IS BASED ON THE MAXIMUM ESTIMATED SPAN LENGTHS IN SECTION 1.3.1 AND 1.3.2.
3. END ZONE IS DEFINED AS THE DISTANCE FROM END OF GIRDER TO THE BEGINNING OF ZONE 1 AND THIS DISTANCE IS TYPICALLY AROUND 1.5 TIMES OF GIRDER DEPTH "H". THE REINFORCEMENT IN END ZONE SHALL BE PROVIDED BY DESIGNER.

CHAPTER 2 – LADOTD DECK DESIGN TABLES

TABLE OF CONTENTS

2.1—LADOTD DECK DESIGN TABLES, GIRDER TOP FLANGE ⩾ 48 inches 1

2.1.1—LADOTD Deck Design Table, Overall Deck Thickness = 7.0 in. (for movable bridge span only) 3

2.1.2—LADOTD Deck Design Table, Overall Deck Thickness = 7.5 in. (for movable bridge span only) 4

2.1.3—LADOTD Deck Design Table, Overall Deck Thickness = 8.0 in. 5

2.1.4—LADOTD Deck Design Table, Overall Deck Thickness = 8.5 in. 6

2.1.5—LADOTD Deck Design Table, Overall Deck Thickness = 9.0 in. 7

2.1.6—LADOTD Deck Design Table, Overall Deck Thickness = 9.5 in. 8

2.2—LADOTD DECK DESIGN TABLES, GIRDER TOP FLANGE < 48 inches 9

2.2.1—LADOTD Deck Design Table, Overall Deck Thickness = 7.0 in. (for movable bridge span only) 10

2.2.2—LADOTD Deck Design Table, Overall Deck Thickness = 7.5 in. (for movable bridge span only) 11

2.2.3—LADOTD Deck Design Table, Overall Deck Thickness = 8.0 in. 12

2.2.4—LADOTD Deck Design Table, Overall Deck Thickness = 8.5 in. 13

2.2.5—LADOTD Deck Design Table, Overall Deck Thickness = 9.0 in. 14

2.2.6—LADOTD Deck Design Table, Overall Deck Thickness = 9.5 in. 15

2.1—LADOTD DECK DESIGN TABLES, GIRDER TOP FLANGE ≥ 48 INCHES

The tables in this section are developed for concrete cast-in-place deck supported by concrete girders with flange width ≥ 48 inches.

These tables may be used in lieu of detailed analysis. The following assumptions and limitations are used in developing this table and must be considered when using the listed values.

- The equivalent strip method is used and all limit states are satisfied.
- Reinforcements shown are for interior regions of the deck only and cannot be applied to deck overhang and its adjacent regions of the deck that need to be designed for vehicle collision provisions in accordance with *LRFD A13*, in addition to the wheel load.
- This table is applicable to decks supported on at least three girders. The maximum total overhang length from the center of exterior girder to the edge of deck shall equal to the smaller of 0.625 times the girder spacing and 6'-0". The minimum overhang length shall equal to 5 times deck thickness.
- Maximum live load moment from *Table A4-1* is used. Design section for the negative moment is determined in accordance with *LRFD A4.6.2.1.6* assuming a 48 inch top flange width for the girder.
- Flexural moments due to dead load effects are assumed to be $M=c*w*L^2$, where w is the uniformly distributed load in kip/ft and L is the girder spacing. For positive flexural moment c=0.08; for negative flexural moment c=0.10.
- The compressive strength of concrete, f'_c=4000 psi. The yield strength of the reinforcing bars, f_y=60 ksi.
- The deck thickness shown includes ½" sacrificial thickness that was not included in the structural calculation, but considered in the dead load calculations.
- For overall deck thickness ≥ 8 inches, the clear concrete cover at top and bottom of the slab equals to 2 ½" inches (including ½" sacrificial thickness) and 1 ½" inches, respectively. For overall deck thickness of 7 and 7 ½ inch, the clear concrete cover equals to 2" (including 1/2" sacrificial thickness) and 1 ½", respectively. Overall deck thickness less than 8 inches can only be used for movable bridge spans.
- The weight of the railing equals to 520.5 lb/ft (TL-5). The bottom width of the railing from the edge of the deck to the gutter line equals to 1'-8". The weight of railing is evenly distributed along the deck in transverse direction (perpendicular to traffic).
- Concrete density is 150 pcf.
- Stay-in-Place (SIP) steel form (foam filled) weight of 10 psf is included.
- Future wearing surface of 25 psf is included.
- The girder spacing is the distance between the centers of the girders.
- Minimum and maximum bar spacings are limited to 5 inches and 7 inches, respectively, with increments of 0.5 inch. This limitation applies to both transverse and longitudinal directions.
- Reinforcing bars are limited to #4, #5, and #6.

- Exposure factor for crack control calculations is assumed to be 1.0.
- Effective span length "S" for the distribution reinforcement calculation is in accordance with *LRFD A9.7.2.3,* assuming 48 inch top flange width and 7 inch web thickness for the girder.

2.1.1—LADOTD Deck Design Table, Overall Deck Thickness = 7.0 in. (for movable bridge span only)

Girder Spacing (ft)	Transverse Reinforcement		Longitudinal Reinforcement	
	Bottom (Bar No. @ Spacing)	Top (Bar No. @ Spacing)	Bottom (Bar No. @ Spacing)	Top (Bar No. @ Spacing)
5’-0”	#4@5.5”	#4@7”	#4@7”	#4@7”
5’-3”	#4@5”	#4@7”	#4@7”	#4@7”
5’-6”	#4@5”	#4@7”	#4@7”	#4@7”
5’-9”	#4@5”	#4@7”	#4@7”	#4@7”
6’-0”	#4@5”	#4@7”	#4@7”	#4@7”
6’-3”	#4@5”	#4@7”	#4@7”	#4@7”
6’-6”	#5@7”	#4@7”	#4@6.5”	#4@7”
6’-9”	#5@7”	#4@7”	#4@6.5”	#4@7”
7’-0”	#5@7”	#4@7”	#4@6.5”	#4@7”
7’-3”	#5@7”	#4@7”	#4@6.5”	#4@7”
7’-6”	#5@6.5”	#4@7”	#4@6”	#4@7”
7’-9”	#5@6.5”	#4@7”	#4@6”	#4@7”
8’-0”	#5@6”	#4@7”	#4@5.5”	#4@7”
8’-3”	#5@6”	#4@6.5”	#4@5.5”	#4@7”
8’-6”	#5@6”	#4@6.5”	#4@5.5”	#4@7”
8’-9”	#5@5.5”	#4@6”	#4@5”	#4@7”
9’-0”	#5@5.5”	#4@6”	#4@5”	#4@7”
9’-3”	#5@5.5”	#4@5.5”	#4@5”	#4@7”
9’-6”	#5@5”	#4@5.5”	#5@7”	#4@7”
9’-9”	#5@5”	#4@5”	#5@7”	#4@7”
10’-0”	#5@5”	#5@7”	#5@7”	#4@6.5”
10’-3”	#6@6.5”	#5@7”	#5@6.5”	#4@6.5”
10’-6”	#6@6.5”	#5@6.5”	#5@6.5”	#4@6”
10’-9”	#6@6”	#5@6”	#5@6”	#4@5.5”
11’-0”	#6@6”	#5@6”	#5@6”	#4@5.5”
11’-3”	#6@6”	#5@5.5”	#5@6”	#4@5”
11’-6”	#6@6”	#5@5.5”	#5@6”	#4@5”
11’-9”	#6@5.5”	#5@5”	#5@5.5”	#5@7”
12’-0”	#6@5.5”	#5@5”	#5@5.5”	#5@7”
12’-3”	#6@5.5”	#6@6.5”	#5@5.5”	#5@6.5”

2.1.2─LADOTD Deck Design Table, Overall Deck Thickness = 7.5 in. (for movable bridge span only)

Girder Spacing (ft)	Transverse Reinforcement		Longitudinal Reinforcement	
	Bottom (Bar No. @ Spacing)	Top (Bar No. @ Spacing)	Bottom (Bar No. @ Spacing)	Top (Bar No. @ Spacing)
5’-0”	#4@6”	#4@7”	#4@7”	#4@7”
5’-3”	#4@6”	#4@7”	#4@7”	#4@7”
5’-6”	#4@6”	#4@7”	#4@7”	#4@7”
5’-9”	#4@5.5”	#4@7”	#4@7”	#4@7”
6’-0”	#4@5.5”	#4@7”	#4@7”	#4@7”
6’-3”	#4@5.5”	#4@7”	#4@7”	#4@7”
6’-6”	#4@5.5”	#4@7”	#4@7”	#4@7”
6’-9”	#4@5”	#4@7”	#4@7”	#4@7”
7’-0”	#4@5”	#4@7”	#4@7”	#4@7”
7’-3”	#4@5”	#4@7”	#4@7”	#4@7”
7’-6”	#4@5”	#4@7”	#4@7”	#4@7”
7’-9”	#5@7”	#4@7”	#4@6.5”	#4@7”
8’-0”	#5@7”	#4@7”	#4@6.5”	#4@7”
8’-3”	#5@7”	#4@7”	#4@6.5”	#4@7”
8’-6”	#5@6.5”	#4@7”	#4@6”	#4@7”
8’-9”	#5@6.5”	#4@7”	#4@6”	#4@7”
9’-0”	#5@6”	#4@6.5”	#4@5.5”	#4@7”
9’-3”	#5@6”	#4@6.5”	#4@5.5”	#4@7”
9’-6”	#5@6”	#4@6”	#4@5.5”	#4@7”
9’-9”	#5@5.5”	#4@5.5”	#4@5”	#4@7”
10’-0”	#5@5.5”	#4@5.5”	#4@5”	#4@7”
10’-3”	#5@5.5”	#4@5”	#4@5”	#4@7”
10’-6”	#5@5”	#5@7”	#5@7”	#4@6.5”
10’-9”	#5@5”	#5@7”	#5@7”	#4@6.5”
11’-0”	#5@5”	#5@6.5”	#5@7”	#4@6”
11’-3”	#5@5”	#5@6.5”	#5@7”	#4@6”
11’-6”	#6@6.5”	#5@6”	#5@6.5”	#4@5.5”
11’-9”	#6@6.5”	#5@5.5”	#5@6.5”	#4@5”
12’-0”	#6@6.5”	#5@5.5”	#5@6.5”	#4@5”
12’-3”	#6@6”	#5@5”	#5@6”	#5@7”
12’-6”	#6@6”	#5@5”	#5@6”	#5@7”
12’-9”	#6@6”	#5@5”	#5@6”	#5@7”
13’-0”	#6@5.5”	#6@6.5”	#5@5.5”	#5@6.5”
13’-3”	#6@5.5”	#6@6.5”	#5@5.5”	#5@6.5”
13’-6”	#6@5.5”	#6@6”	#5@5.5”	#5@6”
13’-9”	#6@5.5”	#6@6”	#5@5.5”	#5@6”
14’-0”	#6@5.5”	#6@5.5”	#5@5.5”	#5@6”
14’-3”	#6@5”	#6@5.5”	#5@5.5”	#5@6”
14’-6”	#6@5”	#6@5.5”	#5@5.5”	#5@6”
14’-9”	#6@5”	#6@5”	#5@5.5”	#5@5.5”
15’-0”	#6@5”	#6@5”	#5@5.5”	#5@5.5”

2.1.3–LADOTD Deck Design Table, Overall Deck Thickness = 8.0 in.

Girder Spacing (ft)	Transverse Reinforcement		Longitudinal Reinforcement	
	Bottom (Bar No. @ Spacing)	Top (Bar No. @ Spacing)	Bottom (Bar No. @ Spacing)	Top (Bar No. @ Spacing)
6’-0”	#4@6”	#4@7”	#4@7”	#4@7”
6’-3”	#4@6”	#4@7”	#4@7”	#4@7”
6’-6”	#4@6”	#4@7”	#4@7”	#4@7”
6’-9”	#4@6”	#4@7”	#4@7”	#4@7”
7’-0”	#4@5.5”	#4@7”	#4@7”	#4@7”
7’-3”	#4@5.5”	#4@7”	#4@7”	#4@7”
7’-6”	#4@5.5”	#4@7”	#4@7”	#4@7”
7’-9”	#4@5”	#4@7”	#4@7”	#4@7”
8’-0”	#4@5”	#4@7”	#4@7”	#4@7”
8’-3”	#4@5”	#4@7”	#4@7”	#4@7”
8’-6”	#5@7”	#4@7”	#4@6.5”	#4@7”
8’-9”	#5@7”	#4@6.5”	#4@6.5”	#4@7”
9’-0”	#5@7”	#4@6.5”	#4@6.5”	#4@7”
9’-3”	#5@6.5”	#4@6”	#4@6”	#4@7”
9’-6”	#5@6.5”	#4@6”	#4@6”	#4@7”
9’-9”	#5@6.5”	#4@5.5”	#4@6”	#4@7”
10’-0”	#5@6”	#4@5.5”	#4@5.5”	#4@7”
10’-3”	#5@6”	#4@5”	#4@5.5”	#4@7”
10’-6”	#5@6”	#5@7”	#4@5.5”	#4@6.5”
10’-9”	#5@5.5”	#5@7”	#4@5”	#4@6.5”
11’-0”	#5@5.5”	#5@6.5”	#4@5”	#4@6”
11’-3”	#5@5.5”	#5@6”	#4@5”	#4@5.5”
11’-6”	#5@5”	#5@6”	#5@7”	#4@5.5”
11’-9”	#5@5”	#5@5.5”	#5@7”	#4@5”
12’-0”	#5@5”	#5@5.5”	#5@7”	#4@5”
12’-3”	#5@5”	#5@5”	#5@7”	#5@7”
12’-6”	#5@5”	#5@5”	#5@7”	#5@7”
12’-9”	#6@6.5”	#5@5”	#5@6.5”	#5@7”
13’-0”	#6@6.5”	#6@6.5”	#5@6.5”	#5@6.5”
13’-3”	#6@6.5”	#6@6”	#5@6.5”	#5@6”
13’-6”	#6@6”	#6@6”	#5@6”	#5@6”
13’-9”	#6@6”	#6@6”	#5@6”	#5@6”
14’-0”	#6@6”	#6@5.5”	#5@6”	#5@6”
14’-3”	#6@6”	#6@5.5”	#5@6”	#5@6”
14’-6”	#6@5.5”	#6@5”	#5@6”	#5@5.5”
14’-9”	#6@5.5”	#6@5”	#5@6”	#5@5.5”
15’-0”	#6@5.5”	#6@5”	#5@6”	#5@5.5”

2.1.4–LADOTD Deck Design Table, Overall Deck Thickness = 8.5 in.

Girder Spacing (ft)	Transverse Reinforcement		Longitudinal Reinforcement	
	Bottom (Bar No. @ Spacing)	Top (Bar No. @ Spacing)	Bottom (Bar No. @ Spacing)	Top (Bar No. @ Spacing)
6’-0”	#4@7”	#4@7”	#4@7”	#4@7”
6’-3”	#4@6.5”	#4@7”	#4@7”	#4@7”
6’-6”	#4@6.5”	#4@7”	#4@7”	#4@7”
6’-9”	#4@6.5”	#4@7”	#4@7”	#4@7”
7’-0”	#4@6”	#4@7”	#4@7”	#4@7”
7’-3”	#4@6”	#4@7”	#4@7”	#4@7”
7’-6”	#4@6”	#4@7”	#4@7”	#4@7”
7’-9”	#4@5.5”	#4@7”	#4@7”	#4@7”
8’-0”	#4@5.5”	#4@7”	#4@7”	#4@7”
8’-3”	#4@5.5”	#4@7”	#4@7”	#4@7”
8’-6”	#4@5”	#4@7”	#4@7”	#4@7”
8’-9”	#4@5”	#4@7”	#4@7”	#4@7”
9’-0”	#4@5”	#4@7”	#4@7”	#4@7”
9’-3”	#5@7”	#4@7”	#4@6.5”	#4@7”
9’-6”	#5@7”	#4@6.5”	#4@6.5”	#4@7”
9’-9”	#5@7”	#4@6”	#4@6.5”	#4@7”
10’-0”	#5@6.5”	#4@6”	#4@6”	#4@7”
10’-3”	#5@6.5”	#4@5.5”	#4@6”	#4@7”
10’-6”	#5@6.5”	#4@5”	#4@6”	#4@7”
10’-9”	#5@6”	#4@5”	#4@5.5”	#4@7”
11’-0”	#5@6”	#5@7”	#4@5.5”	#4@6.5”
11’-3”	#5@6”	#5@7”	#4@5.5”	#4@6.5”
11’-6”	#5@6”	#5@6.5”	#4@5.5”	#4@6”
11’-9”	#5@5.5”	#5@6.5”	#4@5”	#4@6”
12’-0”	#5@5.5”	#5@6”	#4@5”	#4@5.5”
12’-3”	#5@5.5”	#5@6”	#4@5”	#4@5.5”
12’-6”	#5@5.5”	#5@5.5”	#4@5”	#4@5”
12’-9”	#5@5”	#5@5.5”	#5@7”	#4@5”
13’-0”	#5@5”	#5@5”	#5@7”	#5@7”
13’-3”	#5@5”	#5@5”	#5@7”	#5@7”
13’-6”	#5@5”	#6@6.5”	#5@7”	#5@6.5”
13’-9”	#6@6.5”	#6@6.5”	#5@7”	#5@6.5”
14’-0”	#6@6.5”	#6@6.5”	#5@7”	#5@6.5”
14’-3”	#6@6.5”	#6@6”	#5@7”	#5@6.5”
14’-6”	#6@6.5”	#6@6”	#5@7”	#5@6.5”
14’-9”	#6@6.5”	#6@5.5”	#5@7”	#5@6”
15’-0”	#6@6”	#6@5.5”	#5@6.5”	#5@6”

2.1.5—LADOTD Deck Design Table, Overall Deck Thickness = 9.0 in.

Girder Spacing (ft)	Transverse Reinforcement		Longitudinal Reinforcement	
	Bottom (Bar No. @ Spacing)	Top (Bar No. @ Spacing)	Bottom (Bar No. @ Spacing)	Top (Bar No. @ Spacing)
6’-0”	#4@7”	#4@7”	#4@7”	#4@7”
6’-3”	#4@7”	#4@7”	#4@7”	#4@7”
6’-6”	#4@7”	#4@7”	#4@7”	#4@7”
6’-9”	#4@7”	#4@7”	#4@7”	#4@7”
7’-0”	#4@6.5”	#4@7”	#4@7”	#4@7”
7’-3”	#4@6.5”	#4@7”	#4@7”	#4@7”
7’-6”	#4@6.5”	#4@7”	#4@7”	#4@7”
7’-9”	#4@6”	#4@7”	#4@7”	#4@7”
8’-0”	#4@6”	#4@7”	#4@7”	#4@7”
8’-3”	#4@6”	#4@7”	#4@7”	#4@7”
8’-6”	#4@5.5”	#4@7”	#4@7”	#4@7”
8’-9”	#4@5.5”	#4@7”	#4@7”	#4@7”
9’-0”	#4@5.5”	#4@7”	#4@7”	#4@7”
9’-3”	#4@5”	#4@7”	#4@7”	#4@7”
9’-6”	#4@5”	#4@7”	#4@7”	#4@7”
9’-9”	#4@5”	#4@6.5”	#4@7”	#4@7”
10’-0”	#5@7”	#4@6.5”	#4@6.5”	#4@7”
10’-3”	#5@7”	#4@6”	#4@6.5”	#4@7”
10’-6”	#5@7”	#4@5.5”	#4@6.5”	#4@7”
10’-9”	#5@7”	#4@5.5”	#4@6.5”	#4@7”
11’-0”	#5@6.5”	#4@5”	#4@6”	#4@7”
11’-3”	#5@6.5”	#4@5”	#4@6”	#4@7”
11’-6”	#5@6.5”	#5@7”	#4@6”	#4@6.5”
11’-9”	#5@6”	#5@7”	#4@5.5”	#4@6.5”
12’-0”	#5@6”	#5@6.5”	#4@5.5”	#4@6”
12’-3”	#5@6”	#5@6.5”	#4@5.5”	#4@6”
12’-6”	#5@6”	#5@6”	#4@5.5”	#4@5.5”
12’-9”	#5@5.5”	#5@6”	#4@5”	#4@5.5”
13’-0”	#5@5.5”	#5@5.5”	#4@5”	#4@5”
13’-3”	#5@5.5”	#5@5.5”	#4@5”	#4@5”
13’-6”	#5@5.5”	#5@5”	#4@5”	#5@7”
13’-9”	#5@5”	#5@5”	#5@7”	#5@7”
14’-0”	#5@5”	#5@5”	#5@7”	#5@7”
14’-3”	#5@5”	#6@6.5”	#5@7”	#5@7”
14’-6”	#5@5”	#6@6.5”	#5@7”	#5@7”
14’-9”	#5@5”	#6@6.5”	#5@7”	#5@7”
15’-0”	#6@6.5”	#6@6”	#5@7”	#5@6.5”

2.1.6—LADOTD Deck Design Table, Overall Deck Thickness = 9.5 in.

Girder Spacing (ft)	Transverse Reinforcement		Longitudinal Reinforcement	
	Bottom (Bar No. @ Spacing)	Top (Bar No. @ Spacing)	Bottom (Bar No. @ Spacing)	Top (Bar No. @ Spacing)
6’-0”	#4@7”	#4@7”	#4@7”	#4@7”
6’-3”	#4@7”	#4@7”	#4@7”	#4@7”
6’-6”	#4@7”	#4@7”	#4@7”	#4@7”
6’-9”	#4@7”	#4@7”	#4@7”	#4@7”
7’-0”	#4@7”	#4@7”	#4@7”	#4@7”
7’-3”	#4@7”	#4@7”	#4@7”	#4@7”
7’-6”	#4@7”	#4@7”	#4@7”	#4@7”
7’-9”	#4@6.5”	#4@7”	#4@7”	#4@7”
8’-0”	#4@6.5”	#4@7”	#4@7”	#4@7”
8’-3”	#4@6.5”	#4@7”	#4@7”	#4@7”
8’-6”	#4@6”	#4@7”	#4@7”	#4@7”
8’-9”	#4@6”	#4@7”	#4@7”	#4@7”
9’-0”	#4@5.5”	#4@7”	#4@7”	#4@7”
9’-3”	#4@5.5”	#4@7”	#4@7”	#4@7”
9’-6”	#4@5.5”	#4@7”	#4@7”	#4@7”
9’-9”	#4@5”	#4@7”	#4@7”	#4@7”
10’-0”	#4@5”	#4@7”	#4@7”	#4@7”
10’-3”	#4@5”	#4@6.5”	#4@7”	#4@7”
10’-6”	#4@5”	#4@6”	#4@7”	#4@7”
10’-9”	#5@7”	#4@6”	#4@6.5”	#4@7”
11’-0”	#5@7”	#4@5.5”	#4@6.5”	#4@7”
11’-3”	#5@7”	#4@5”	#4@6.5”	#4@7”
11’-6”	#5@7”	#4@5”	#4@6.5”	#4@7”
11’-9”	#5@6.5”	#4@5”	#4@6”	#4@7”
12’-0”	#5@6.5”	#5@7”	#4@6”	#4@6.5”
12’-3”	#5@6.5”	#5@7”	#4@6”	#4@6.5”
12’-6”	#5@6”	#5@6.5”	#4@5.5”	#4@6”
12’-9”	#5@6”	#5@6.5”	#4@5.5”	#4@6”
13’-0”	#5@6”	#5@6”	#4@5.5”	#4@5.5”
13’-3”	#5@6”	#5@6”	#4@5.5”	#4@5.5”
13’-6”	#5@5.5”	#5@5.5”	#4@5”	#4@5”
13’-9”	#5@5.5”	#5@5.5”	#4@5”	#4@5”
14’-0”	#5@5.5”	#5@5.5”	#4@5”	#4@5”
14’-3”	#5@5.5”	#5@5”	#4@5”	#4@5”
14’-6”	#5@5.5”	#5@5”	#4@5”	#4@5”
14’-9”	#5@5”	#5@5”	#4@5”	#4@5”
15’-0”	#5@5”	#6@6.5”	#4@5”	#5@7”

2.2—LADOTD DECK DESIGN TABLES, GIRDER TOP FLANGE < 48 INCHES

The tables in this section are developed for concrete cast-in-place deck supported by concrete or steel girders with flange width < 48 inches.

These tables may be used in lieu of detailed analysis. Refer to Section 2.1 for assumptions and limitations used. In addition, the following assumptions were used as exceptions to those cases listed in Section 2.1 in order to develop these tables and must be considered when using the listed values.

- Maximum live load moment from *Table A4-1* is used. Design section for the negative moment is determined in accordance with *LRFD A4.6.2.1*.6, assuming a 12 inch top flange width for the girder.
- Effective span length "S" for the distribution reinforcement calculation is in accordance with *LRFD A9.7.2.3*, assuming a 12’’ top flange and 5/8’’ web for the girder.

2.2.1—LADOTD Deck Design Table, Overall Deck Thickness = 7.0 in. (for movable bridge span only)

Girder Spacing (ft)	Transverse Reinforcement		Longitudinal Reinforcement	
	Bottom (Bar No. @ Spacing)	Top (Bar No. @ Spacing)	Bottom (Bar No. @ Spacing)	Top (Bar No. @ Spacing)
5’-0”	#4@5.5”	#4@7”	#4@7”	#4@7”
5’-3”	#4@5”	#4@7”	#4@7”	#4@7”
5’-6”	#4@5”	#4@6.5”	#4@7”	#4@7”
5’-9”	#4@5”	#4@6”	#4@7”	#4@7”
6’-0”	#4@5”	#4@5.5”	#4@7”	#4@7”
6’-3”	#4@5”	#4@5.5”	#4@7”	#4@7”
6’-6”	#5@7”	#4@5”	#4@6.5”	#4@7”
6’-9”	#5@7”	#4@5”	#4@6.5”	#4@7”
7’-0”	#5@7”	#5@7”	#4@6.5”	#4@6.5”
7’-3”	#5@7”	#5@6.5”	#4@6.5”	#4@6”
7’-6”	#5@6.5”	#5@6.5”	#4@6”	#4@6”
7’-9”	#5@6.5”	#5@6”	#4@6”	#4@5.5”
8’-0”	#5@6”	#5@6”	#4@5.5”	#4@5.5”
8’-3”	#5@6”	#5@6”	#4@5.5”	#4@5.5”
8’-6”	#5@6”	#5@6”	#4@5.5”	#4@5.5”
8’-9”	#5@5.5”	#5@5.5”	#4@5”	#4@5”
9’-0”	#5@5.5”	#5@5.5”	#4@5”	#4@5”
9’-3”	#5@5.5”	#5@5.5”	#4@5”	#4@5”
9’-6”	#5@5”	#5@5”	#5@7”	#5@7”
9’-9”	#5@5”	#5@5”	#5@7”	#5@7”
10’-0”	#5@5”	#6@6.5”	#5@7”	#5@6.5”
10’-3”	#6@6.5”	#6@6”	#5@6.5”	#5@6”
10’-6”	#6@6.5”	#6@6”	#5@6.5”	#5@6”
10’-9”	#6@6”	#6@5.5”	#5@6”	#5@5”

2.2.2—LADOTD Deck Design Table, Overall Deck Thickness = 7.5 in. (for movable bridge span only)

Girder Spacing (ft)	Transverse Reinforcement		Longitudinal Reinforcement	
	Bottom (Bar No. @ Spacing)	Top (Bar No. @ Spacing)	Bottom (Bar No. @ Spacing)	Top (Bar No. @ Spacing)
5’-0”	#4@6”	#4@7”	#4@7”	#4@7”
5’-3”	#4@6”	#4@7”	#4@7”	#4@7”
5’-6”	#4@6”	#4@7”	#4@7”	#4@7”
5’-9”	#4@5.5”	#4@6.5”	#4@7”	#4@7”
6’-0”	#4@5.5”	#4@6.5”	#4@7”	#4@7”
6’-3”	#4@5.5”	#4@6”	#4@7”	#4@7”
6’-6”	#4@5.5”	#4@5.5”	#4@7”	#4@7”
6’-9”	#4@5”	#4@5.5”	#4@7”	#4@7”
7’-0”	#4@5”	#4@5”	#4@7”	#4@7”
7’-3”	#4@5”	#4@5”	#4@7”	#4@7”
7’-6”	#4@5”	#5@7”	#4@7”	#4@6.5”
7’-9”	#5@7”	#5@7”	#4@6.5”	#4@6.5”
8’-0”	#5@7”	#5@7”	#4@6.5”	#4@6.5”
8’-3”	#5@7”	#5@6.5”	#4@6.5”	#4@6”
8’-6”	#5@6.5”	#5@6.5”	#4@6”	#4@6”
8’-9”	#5@6.5”	#5@6.5”	#4@6”	#4@6”
9’-0”	#5@6”	#5@6.5”	#4@5.5”	#4@6”
9’-3”	#5@6”	#5@6”	#4@5.5”	#4@5.5”
9’-6”	#5@6”	#5@6”	#4@5.5”	#4@5.5”
9’-9”	#5@5.5”	#5@5.5”	#4@5”	#4@5”
10’-0”	#5@5.5”	#5@5”	#4@5”	#5@7”
10’-3”	#5@5.5”	#5@5”	#4@5”	#5@7”
10’-6”	#5@5”	#6@6.5”	#5@7”	#5@6.5”
10’-9”	#5@5”	#6@6.5”	#5@7”	#5@6.5”
11’-0”	#5@5”	#6@6”	#5@7”	#5@6”
11’-3”	#5@5”	#6@6”	#5@7”	#5@6”
11’-6”	#6@6.5”	#6@5.5”	#5@6.5”	#5@5.5”
11’-9”	#6@6.5”	#6@5.5”	#5@6.5”	#5@5.5”
12’-0”	#6@6.5”	#6@5”	#5@6.5”	#5@5”
12’-3”	#6@6”	#6@5”	#5@6.5”	#5@5”
12’-6”	#6@6”	#6@5”	#5@6.5”	#5@5”

2.2.3─LADOTD Deck Design Table, Overall Deck Thickness = 8.0 in.

Girder Spacing (ft)	Transverse Reinforcement		Longitudinal Reinforcement	
	Bottom (Bar No. @ Spacing)	Top (Bar No. @ Spacing)	Bottom (Bar No. @ Spacing)	Top (Bar No. @ Spacing)
6’-0”	#4@6”	#4@6.5”	#4@7”	#4@7”
6’-3”	#4@6”	#4@6”	#4@7”	#4@7”
6’-6”	#4@6”	#4@5.5”	#4@7”	#4@7”
6’-9”	#4@6”	#4@5.5”	#4@7”	#4@7”
7’-0”	#4@5.5”	#4@5”	#4@7”	#4@7”
7’-3”	#4@5.5”	#4@5”	#4@7”	#4@7”
7’-6”	#4@5.5”	#5@7”	#4@7”	#4@6.5”
7’-9”	#4@5”	#5@7”	#4@7”	#4@6.5”
8’-0”	#4@5”	#5@7”	#4@7”	#4@6.5”
8’-3”	#4@5”	#5@6.5”	#4@7”	#4@6”
8’-6”	#5@7”	#5@6.5”	#4@6.5”	#4@6”
8’-9”	#5@7”	#5@6.5”	#4@6.5”	#4@6”
9’-0”	#5@7”	#5@6”	#4@6.5”	#4@5.5”
9’-3”	#5@6.5”	#5@6”	#4@6”	#4@5.5”
9’-6”	#5@6.5”	#5@6”	#4@6”	#4@5.5”
9’-9”	#5@6.5”	#5@5.5”	#4@6”	#4@5”
10’-0”	#5@6”	#5@5”	#4@5.5”	#5@7”
10’-3”	#5@6”	#5@5”	#4@5.5”	#5@7”
10’-6”	#5@6”	#6@6.5”	#4@5.5”	#5@6.5”
10’-9”	#5@5.5”	#6@6.5”	#4@5”	#5@6.5”
11’-0”	#5@5.5”	#6@6”	#4@5”	#5@6”
11’-3”	#5@5.5”	#6@5.5”	#4@5”	#5@5.5”
11’-6”	#5@5”	#6@5.5”	#5@7”	#5@5.5”
11’-9”	#5@5”	#6@5.5”	#5@7”	#5@5.5”
12’-0”	#5@5”	#6@5”	#5@7”	#5@5”
12’-3”	#5@5”	#6@5”	#5@7”	#5@5”

2.2.4—LADOTD Deck Design Table, Overall Deck Thickness = 8.5 in.

Girder Spacing (ft)	Transverse Reinforcement		Longitudinal Reinforcement	
	Bottom (Bar No. @ Spacing)	Top (Bar No. @ Spacing)	Bottom (Bar No. @ Spacing)	Top (Bar No. @ Spacing)
6’-0”	#4@7”	#4@7”	#4@7”	#4@7”
6’-3”	#4@6.5”	#4@6.5”	#4@7”	#4@7”
6’-6”	#4@6.5”	#4@6.5”	#4@7”	#4@7”
6’-9”	#4@6.5”	#4@6”	#4@7”	#4@7”
7’-0”	#4@6”	#4@5.5”	#4@7”	#4@7”
7’-3”	#4@6”	#4@5.5”	#4@7”	#4@7”
7’-6”	#4@6”	#4@5”	#4@7”	#4@7”
7’-9”	#4@5.5”	#4@5”	#4@7”	#4@7”
8’-0”	#4@5.5”	#4@5”	#4@7”	#4@7”
8’-3”	#4@5.5”	#5@7”	#4@7”	#4@6.5”
8’-6”	#4@5”	#5@7”	#4@7”	#4@6.5”
8’-9”	#4@5”	#5@7”	#4@7”	#4@6.5”
9’-0”	#4@5”	#5@7”	#4@7”	#4@6.5”
9’-3”	#5@7”	#5@7”	#4@6.5”	#4@6.5”
9’-6”	#5@7”	#5@6.5”	#4@6.5”	#4@6”
9’-9”	#5@7”	#5@6”	#4@6.5”	#4@5.5”
10’-0”	#5@6.5”	#5@6”	#4@6”	#4@5.5”
10’-3”	#5@6.5”	#5@5.5”	#4@6”	#4@5”
10’-6”	#5@6.5”	#5@5”	#4@6”	#5@7”
10’-9”	#5@6”	#5@5”	#4@5.5”	#5@7”
11’-0”	#5@6”	#5@5”	#4@5.5”	#5@7”
11’-3”	#5@6”	#6@6.5”	#4@5.5”	#5@6.5”
11’-6”	#5@6”	#6@6”	#4@5.5”	#5@6”
11’-9”	#5@5.5”	#6@6”	#4@5”	#5@6”
12’-0”	#5@5.5”	#6@6”	#4@5”	#5@6”
12’-3”	#5@5.5”	#6@5.5”	#4@5”	#5@6”
12’-6”	#5@5.5”	#6@5.5”	#4@5”	#5@6”
12’-9”	#5@5”	#6@5”	#4@5”	#5@5.5”
13’-0”	#5@5”	#6@5”	#4@5”	#5@5.5”
13’-3”	#5@5”	#6@5”	#4@5”	#5@5.5”

2.2.5—LADOTD Deck Design Table, Overall Deck Thickness = 9.0 in.

Girder Spacing (ft)	Transverse Reinforcement		Longitudinal Reinforcement	
	Bottom (Bar No. @ Spacing)	Top (Bar No. @ Spacing)	Bottom (Bar No. @ Spacing)	Top (Bar No. @ Spacing)
6’-0”	#4@7”	#4@7”	#4@7”	#4@7”
6’-3”	#4@7”	#4@7”	#4@7”	#4@7”
6’-6”	#4@7”	#4@7”	#4@7”	#4@7”
6’-9”	#4@7”	#4@6.5”	#4@7”	#4@7”
7’-0”	#4@6.5”	#4@6”	#4@7”	#4@7”
7’-3”	#4@6.5”	#4@6”	#4@7”	#4@7”
7’-6”	#4@6.5”	#4@5.5”	#4@7”	#4@7”
7’-9”	#4@6”	#4@5.5”	#4@7”	#4@7”
8’-0”	#4@6”	#4@5.5”	#4@7”	#4@7”
8’-3”	#4@6”	#4@5”	#4@7”	#4@7”
8’-6”	#4@5.5”	#4@5”	#4@7”	#4@7”
8’-9”	#4@5.5”	#4@5”	#4@7”	#4@7”
9’-0”	#4@5.5”	#4@5”	#4@7”	#4@7”
9’-3”	#4@5”	#4@5”	#4@7”	#4@7”
9’-6”	#4@5”	#5@7”	#4@7”	#4@6.5”
9’-9”	#4@5”	#5@6.5”	#4@7”	#4@6”
10’-0”	#5@7”	#5@6.5”	#4@6.5”	#4@6”
10’-3”	#5@7”	#5@6”	#4@6.5”	#4@5.5”
10’-6”	#5@7”	#5@6”	#4@6.5”	#4@5.5”
10’-9”	#5@7”	#5@5.5”	#4@6.5”	#4@5”
11’-0”	#5@6.5”	#5@5.5”	#4@6”	#4@5”
11’-3”	#5@6.5”	#5@5”	#4@6”	#5@7”
11’-6”	#5@6.5”	#5@5”	#4@6”	#5@7”
11’-9”	#5@6”	#6@6.5”	#4@5.5”	#5@6.5”
12’-0”	#5@6”	#6@6.5”	#4@5.5”	#5@6.5”
12’-3”	#5@6”	#6@6”	#4@5.5”	#5@6.5”
12’-6”	#5@6”	#6@6”	#4@5.5”	#5@6.5”
12’-9”	#5@5.5”	#6@6”	#4@5.5”	#5@6.5”
13’-0”	#5@5.5”	#6@5.5”	#4@5.5”	#5@6”
13’-3”	#5@5.5”	#6@5.5”	#4@5.5”	#5@6”
13’-6”	#5@5.5”	#6@5.5”	#4@5.5”	#5@6”
13’-9”	#5@5”	#6@5”	#4@5”	#5@5.5”
14’-0”	#5@5”	#6@5”	#4@5”	#5@5.5”
14’-3”	#5@5”	#6@5”	#4@5”	#5@5.5”

2.2.6–LADOTD Deck Design Table, Overall Deck Thickness = 9.5 in.

Girder Spacing (ft)	Transverse Reinforcement		Longitudinal Reinforcement	
	Bottom (Bar No. @ Spacing)	Top (Bar No. @ Spacing)	Bottom (Bar No. @ Spacing)	Top (Bar No. @ Spacing)
6’-0”	#4@7”	#4@7”	#4@7”	#4@7”
6’-3”	#4@7”	#4@7”	#4@7”	#4@7”
6’-6”	#4@7”	#4@7”	#4@7”	#4@7”
6’-9”	#4@7”	#4@7”	#4@7”	#4@7”
7’-0”	#4@7”	#4@6.5”	#4@7”	#4@7”
7’-3”	#4@7”	#4@6.5”	#4@7”	#4@7”
7’-6”	#4@7”	#4@6”	#4@7”	#4@7”
7’-9”	#4@6.5”	#4@6”	#4@7”	#4@7”
8’-0”	#4@6.5”	#4@6”	#4@7”	#4@7”
8’-3”	#4@6.5”	#4@5.5”	#4@7”	#4@7”
8’-6”	#4@6”	#4@5.5”	#4@7”	#4@7”
8’-9”	#4@6”	#4@5.5”	#4@7”	#4@7”
9’-0”	#4@5.5”	#4@5.5”	#4@7”	#4@7”
9’-3”	#4@5.5”	#4@5”	#4@7”	#4@7”
9’-6”	#4@5.5”	#4@5”	#4@7”	#4@7”
9’-9”	#4@5”	#5@7”	#4@7”	#4@6.5”
10’-0”	#4@5”	#5@7”	#4@7”	#4@6.5”
10’-3”	#4@5”	#5@6.5”	#4@7”	#4@6”
10’-6”	#4@5”	#5@6.5”	#4@7”	#4@6”
10’-9”	#5@7”	#5@6”	#4@6.5”	#4@5.5”
11’-0”	#5@7”	#5@6”	#4@6.5”	#4@5.5”
11’-3”	#5@7”	#5@5.5”	#4@6.5”	#4@5”
11’-6”	#5@7”	#5@5.5”	#4@6.5”	#4@5”
11’-9”	#5@6.5”	#5@5”	#4@6”	#5@7”
12’-0”	#5@6.5”	#5@5”	#4@6”	#5@7”
12’-3”	#5@6.5”	#5@5”	#4@6”	#5@7”
12’-6”	#5@6”	#6@6.5”	#4@6”	#5@7”
12’-9”	#5@6”	#6@6.5”	#4@6”	#5@7”
13’-0”	#5@6”	#6@6”	#4@6”	#5@6.5”
13’-3”	#5@6”	#6@6”	#4@6”	#5@6.5”
13’-6”	#5@5.5”	#6@6”	#4@5.5”	#5@6.5”
13’-9”	#5@5.5”	#6@5.5”	#4@5.5”	#5@6”
14’-0”	#5@5.5”	#6@5.5”	#4@5.5”	#5@6”
14’-3”	#5@5.5”	#6@5.5”	#4@5.5”	#5@6”
14’-6”	#5@5.5”	#6@5”	#4@5.5”	#5@5.5”
14’-9”	#5@5”	#6@5”	#4@5.5”	#5@5.5”
15’-0”	#5@5”	#6@5”	#4@5.5”	#5@5.5”

PART IV

BACKGROUND INFORMATION

CHAPTER 1 – LADV-11 DEVELOPMENT

TABLE OF CONTENTS

1.1—OBJECTIVE OF RESEARCH AND ANALYSIS 1
1.2—VEHICLES 1
1.2.1—Design Vehicle 1
1.2.2—Louisiana Special Design Vehicles 1
1.3—INVESTIGATION OF FLEXURE MOMENT AND SHEAR 3
1.3.1—Procedure of the Calculation of MF_F and MF_V 3
1.3.2—Upper Boundary Line to Cover All Data 6
1.3.3—Summary of Magnification Factor for Flexure Moment and Shear 10
1.3.4— Serviceability of Slab Bridges 10
1.4—INVESTIGATION OF SUPPORT REACTION 15
1.4.1—Calculate the Reaction for Different Span Length Combinations 15
1.4.2—Summarize the Results 16
1.4.3—Find the Best Function to Cover All Data 54
1.4.3.1—Factored Support Reaction with or without Dynamic Impact 54
1.4.3.2—Support Reaction without Dynamic Impact (Used for Calculating Service Pile Load Only) 55
1.4.4—Summary of Equations for Support Reactions 56
1.5—SUMMARY AND CONCLUSIONS 56

1.1—OBJECTIVE OF RESEARCH AND ANALYSIS

The LADOTD current design policy is to use HL-93 live load model as the design load. In addition, designers are required to check the eight (8) Louisiana special design vehicles (LASDV) for Strength II with a specific load factor. This complicated process requires larger design efforts and most often results in new bridges not meeting the minimum load rating criteria. A new load model that envelops the LA special design vehicles and meets the minimum load rating criteria is needed. The purpose of this work is to determine Magnification Factors (MF) for the AASHTO design vehicle HL-93, such that the effects of HL-93 multiplied by the magnification factors will encompass the effects of all LASDV load cases.

This report includes the investigation of flexural moment, shear, and support reaction for different span combinations. Simple and continuous spans with span lengths varying from 20 ft. up to 500 ft. were considered. For support reactions, the investigation only considered reactions at the interior support of two-span bridges, which was determined to be the most critical case.

1.2—VEHICLES

1.2.1—Design Vehicle

According to *AASHTO LRFD A3.6.1.3.1*, the design vehicular live load effect is taken as the larger of the following:

- The effect of the design tandem combined with the effect of the design lane load, or
- The effect of one design truck with the variable axle spacing specified in *A3.6.1.2.2*, combined with the effect of the design lane load, and
- For negative moment between points of contraflexure under a uniform load on all spans, and reactions at interior piers only, 90 percent of the effect of two design trucks spaced a minimum of 50 ft. between the lead axle of one truck and the rear axle of the other truck combined with 90 percent of the effect of the design lane load. The distance between the 32.0-kip axles of each truck is 14 ft. The two design trucks are placed in adjacent spans in order to produce maximum force effects.

1.2.2—Louisiana Special Design Vehicles

The Louisiana Special Design Vehicles are shown in Figure 1.2.2-1 (*LADOTD LRFD Bridge Design Manual*, Figure 2.1, 2008).

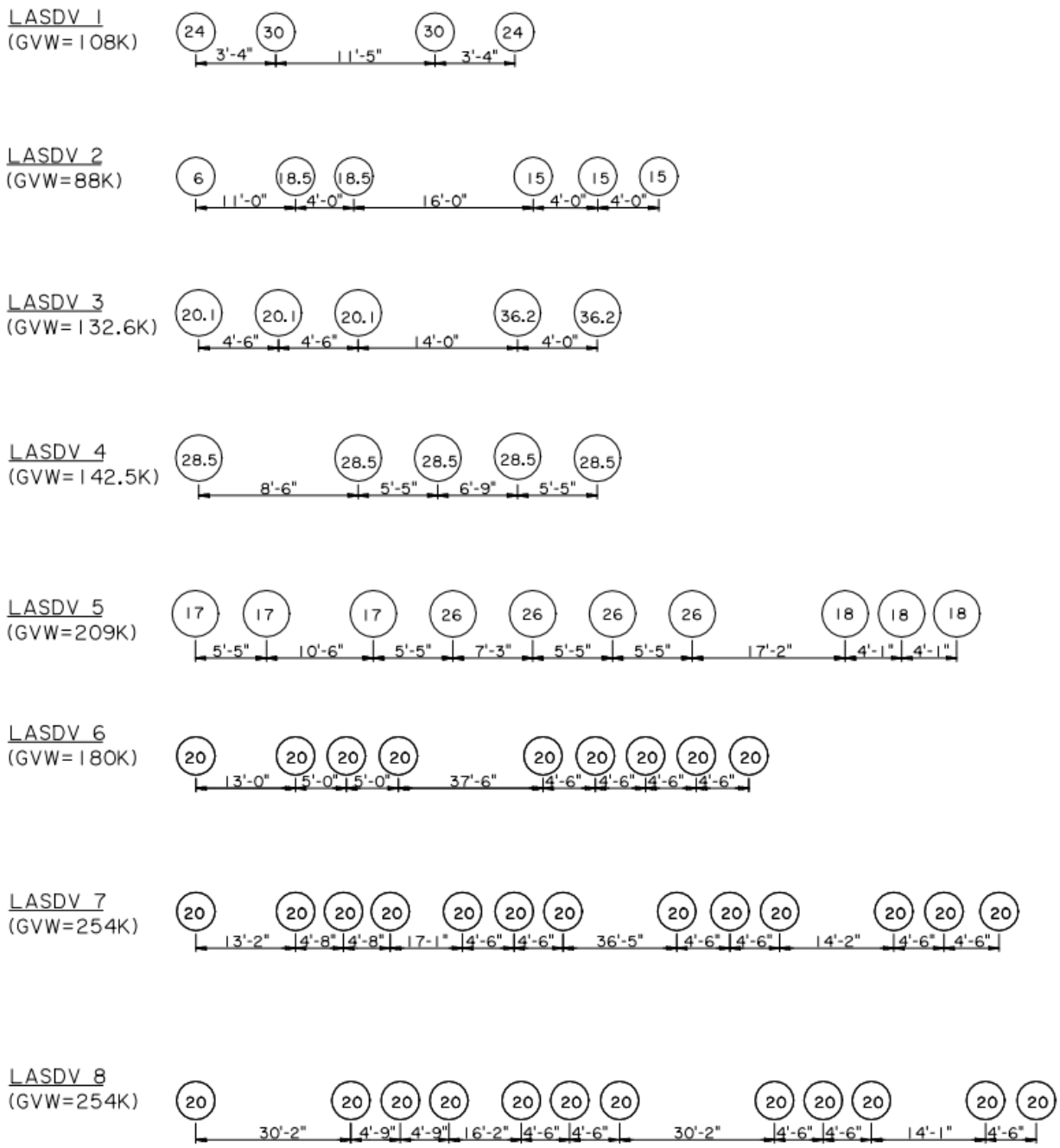

Figure 1.2.2-1: Louisiana Special Design Vehicles

1.3—INVESTIGATION OF FLEXURE MOMENT AND SHEAR

This analysis was carried out using the program Smart Bridge Suite 3.0 (Traditional Analysis), which generates flexural moment and shear effects on a superstructure. Bridges with simply supported spans and continuous spans with span lengths varying from 20 ft. up to 500 ft. were investigated. Table 1.3-1 summarizes the bridge types studied.

Table 1.3-1: Bridge Types Studied For Moment and Shear

Bridge type		Span length, ft.
Simply supported		20 ~ 240 (every 10'); 260, 300, 350, 400, 450, 500
Two continuous spans	Equal	20 ~ 240 (every 10'); 260, 300, 350, 400, 450, 500 (per each span)
	Unequal	20-30, 30-50,40-70, 50-70,60-100, 70-100, 80-100, 90-100, 80-130, 100-160, 110-180, 125-195, 140-210, 155-225, 160-240, 200-300, 260-400, 330-500
Three continuous spans	Equal	20 ~240 (every 10'); 260, 300, 350, 400, 450, 500 (per each span)
	Unequal	20-30-20, 30-50-30, 50-80-50, 65-100-65, 80-120-80, 100-150-100,120-180-120, 135-200-135, 150-225-150, 160-240-160, 200-300-200, 260-400-260, 330-500-330

In traditional bridge design, the live load effects are distributed to a specific girder by a distribution factor, as specified in AASHTO bridge design specifications. Since the objective of this work is to investigate the correlation between the HL-93 design load and the LA special design vehicle loads, the flexure and shear effects under per-lane load, without applying the distribution factor, were used for investigation. Note that the dynamic impact factor is included in the study.

1.3.1—Procedure of the Calculation of MF_F and MF_V

The following procedure was used to determine the ratio of the maximum factored LASDV moment/shear to the factored HL-93 moment/shear, which represents the magnification factor of HL-93 loading. For each case, the magnification factors are calculated using the following equations:

$$MF_F = \frac{Max(M_{LASDV})}{Max(M_{Design})}$$

where:

MF_F = Magnification factor for flexure moment

$Max(M_{LASDV})$ = Maximum flexure moment caused by factored LASDVs

$Max(M_{Design})$ = Maximum flexure moment caused by factored HL-93

$$MF_V = \frac{Max(V_{LASDV})}{Max(V_{Design})}$$

where:

MF_V = Magnification factor for shear

$Max(V_{LASDV})$ = Maximum shear caused by factored LASDV

$Max(V_{Design})$ = Maximum shear caused by factored HL-93

The detailing procedure is presented as follows:

1) Flexural moment and shear force at bridge sections are exported from Smart Bridge Suite and plotted in Microsoft Excel.

Note: 0.2 kip/ft. uniform load was applied with the LASDV to determine the positive and negative moments of bridge for any span length exceeding 200 feet.

2) Appropriate load factors are applied to the lane moment/shear under each loading. For bridge design and load rating at strength limit state, live load factors are applied. The load factors for design loading (Inventory) and LASDV, listed in Table 1.3.1-1, are in accordance with AASHTO specifications and LADOTD policies for bridge rating and evaluation.

Table 1.3.1-1: Load Factors for Design Loading and LASDV

Loading Vehicle		Load Factor
Design Loading	HL-93	1.750
LA Special Design Vehicles (LASDVs)	LASDV1	1.720
	LASDV2	1.800
	LASDV3	1.474
	LASDV4	1.375
	LASDV5	1.300
	LASDV6	1.300
	LASDV7	1.300
	LASDV8	1.300

3) Calculate the ratio of the 1.75*HL93 moment/shear to the maximum of factored LASDVs moment/shear, respectively. This ratio is determined to justify the percentage difference between the design loading and the control LA special vehicles.

- Flexure Moment Ratio $\frac{1.75(HL93)}{Max.(Factored\ \ LASDV\ 1,2,....8)}$ for the maximum moment section (i.e., 0.5L for the simply supported case).
- Shear Ratio $\frac{1.75(HL93)}{Max.(Factored\ \ LASDV\ 1,2,....8)}$ for the critical shear section, at approximately 0.05L.

Note that for continuous cases, flexure and shear ratio are calculated for each span of a 2-span continuous unit, and for Span 1 and Span 2 for a 3-span continuous unit (since Span 1 = Span 3 in this study) and the lesser one is taken as the control value for $\frac{1.75(HL93)}{Max.(Factored\ \ LASDV\ \ 1,2,....8)}$.

Therefore, it results in the larger value of $\frac{Max.(Factored\ \ LASDV\ \ 1,2,....8)}{1.75(HL-93)}$, which represents the controlling magnification factor of HL-93 for flexure moment (MF_F) or shear (MF_V).

A special case for the negative flexural moment of certain span lengths, the MF calculated on the basis of the support region differs largely from regions away from the support. For example, for a 100-100 ft. continuous span unit, as shown in Figure 1.3.1-1, 1.75*HL93 can envelop all factored LASDVs at the support region, but not at the other regions. Hence, a ratio based on the negative moment at 0.85L is considered better for the case of "Within Span Negative Moment."

4.) Plotting of the ratio $\frac{Max.(Factored\ \ LASDV\ \ 1,2,....8)}{1.75(HL93)}$ (MF_F or MF_V) against the span length in feet is shown in Figures 1.3.2-1, 1.3.2-2, and 1.3.2-3. *(Note that the span length used for the figures is the single span length for simply-supported and equal continuous span, but the shortest span length for unequal span cases.)*

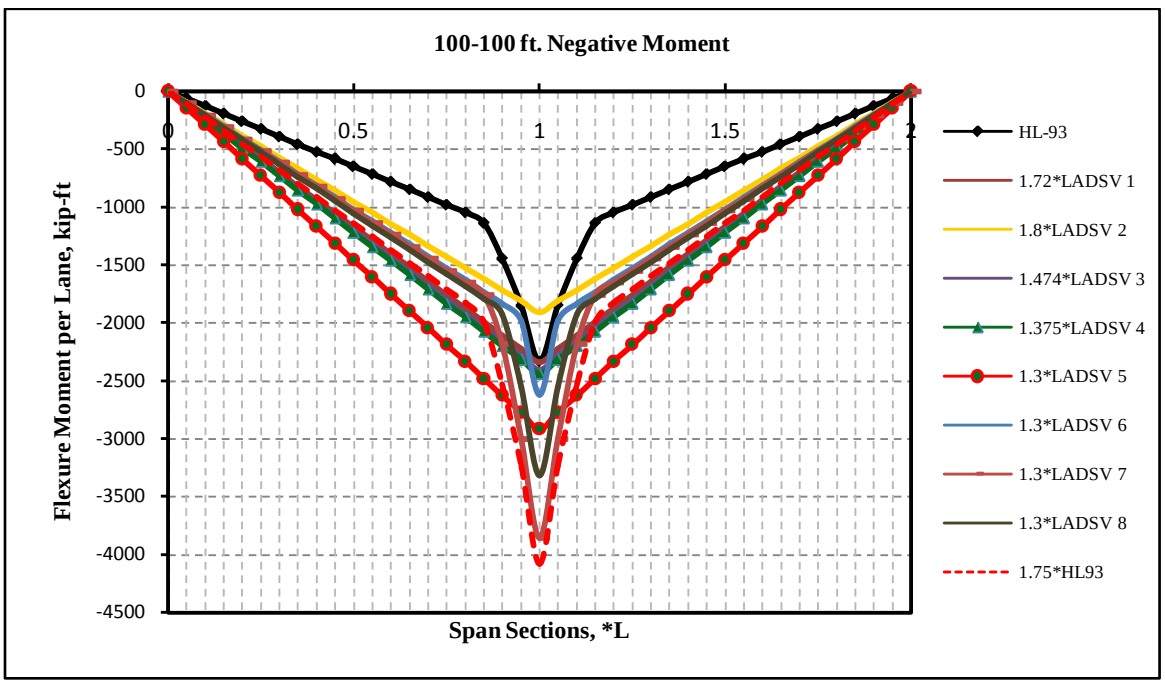

Figure 1.3.1-1: Negative Moment for 100-100 ft. Continuous Span Unit

1.3.2—Upper Boundary Line to Cover All Data

The upper boundary line is selected so that it envelops the ratios from all covered cases (i.e. simply supported, 2 equal spans, 3 equal spans, 2 unequal spans, and 3 unequal spans), as shown in Figures 1.3.2-1, 1.3.2-2, and 1.3.2-3, respectively.

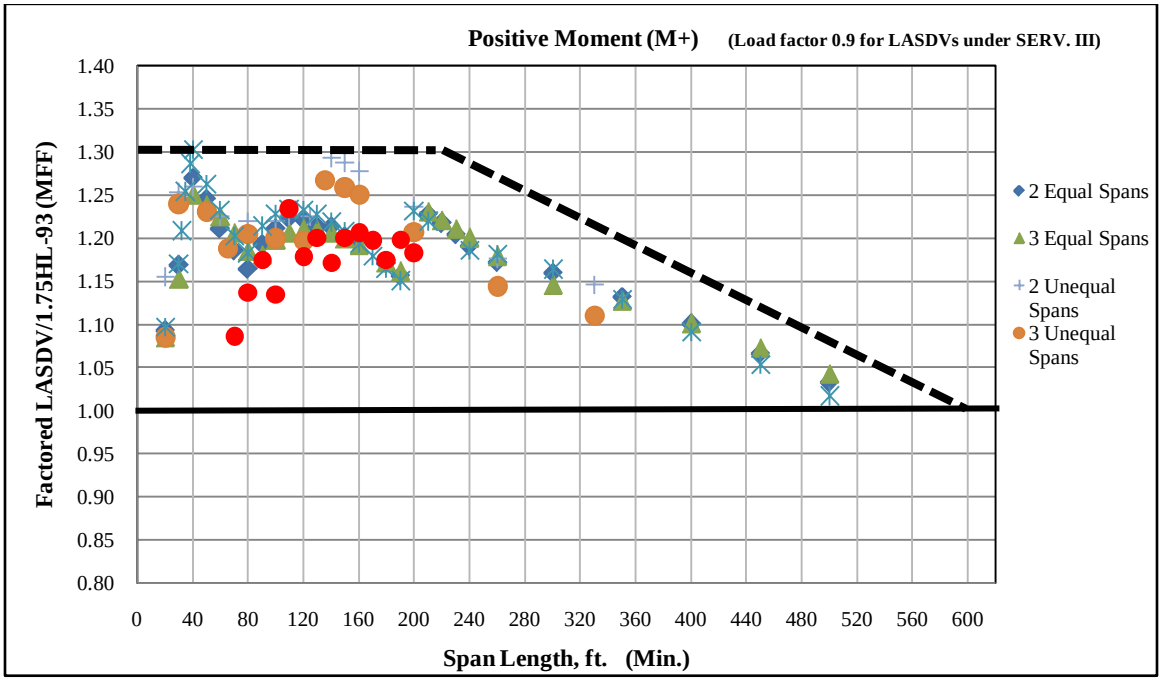

Figure 1.3.2-1: Upper Boundary Lines for Positive Flexure Moment

Condition	MF_F
S ≤ 240 ft.	1.30
240 ft. < S < 600 ft.	Interpolation
S ≥ 600 ft.	1.00

where:

MF_F = Magnification Factor

S = Span length, use shortest span for unequal continuous spans (feet)

Note that the red data points shown in Figure 1.3.2-1 are for checking Service III for prestressed concrete bridges, load factor 0.9 is applied to the LASDVs under Service III limit state, for which the load rating analysis for Service III is addressed in details as follows.

The proposed upper boundary lines in Figure 1.3.2-1 are based on strength limit state, for which the service limit state shall be taken into account as well.

For consistency, design examples hereafter will be performed with the new LG Girders with concrete strengths as specified in the new LADOTD *Bridge Design and Evaluation Manual* (BDEM). Only span lengths from 70 ft. to 200 ft. are to be investigated herein due to following considerations:

- At most cases the maximum span length for prestressed concrete girder bridges would be less than

200 ft.

- From Figure 1.3.2-1 it can be seen that the upper boundary line reserves about 10 percent more than the actual ratio for the 70 ft long spans, which could account for the service limit state at this range. Hence only span length varying from 70-200 ft. is considered.

Assumptions for Service III examples as shown in Figure 1.3.2-1 are given in Table 1.3.2-1. In addition, the load factor for Design loading is 1.0, while 0.9 load factor for LA permit Vehicles (LASDVs).

Table 1.3.2-1: Design Assumptions for Service III Examples

Bridge Girder:	New LG Girders
Rating Methodology:	Mixed with traffic
f_c' (girder):	8.5ksi - 10.0 ksi
f_{ci}' (girder):	6.5ksi - 7.5ksi
Allowable tension (Inv.):	$6\sqrt{f_c'}$ (girder)
Allowable tension (Op.):	$7.5\sqrt{f_c'}$ (girder)
f_c' (deck):	4.0 ksi
Design load:	1.3 *HL-93

Table 1.3.2-2 summarizes the load rating results for bridges with span length from 70 ft. to 200 ft. Note that the minimum design is performed for the new design loading.

Table 1.3.2-2: Load Rating Summary Based on Above Assumptions

Service III				
Span Length, ft.	**Design load (*HL93)**	**Rating Factor (RF)**		
		$RF_{Design\ load}$ (Inv.)	**RF_{LASDV}**	**1.3/ RF_{LASDV}**
70	1.30	1.02	1.20	1.09
80	1.30	1.05	1.14	1.14
90	1.30	1.01	1.11	1.18
100	1.30	1.07	1.14	1.14
110	1.30	1.00	1.05	1.23
120	1.30	1.05	1.10	1.18
130	1.30	1.05	1.08	1.20
140	1.30	1.07	1.11	1.17
150	1.30	1.05	1.08	1.20
160	1.30	1.03	1.08	1.21
170	1.30	1.03	1.09	1.20
180	1.30	1.04	1.11	1.18
190	1.30	1.01	1.08	1.20
200	1.30	1.01	1.10	1.18
		Min. Design		

The factor of "1.3/ R.F.$_{LASDV}$" is the required magnification for HL-93 to account for the service limit state, as plotted in Figure 1.3.2-1.

It can be seen that, for prestressed concrete bridges, using a load factor of 0.9 for LASDVs under Service III limit state, provides higher load rating factor than that from design loading (1.3*HL-93) with 1.0 load factor. Hence, it becomes unnecessary to check for LADOTD permits if the bridges are designed on the basis of 1.3*HL-93 design loading.

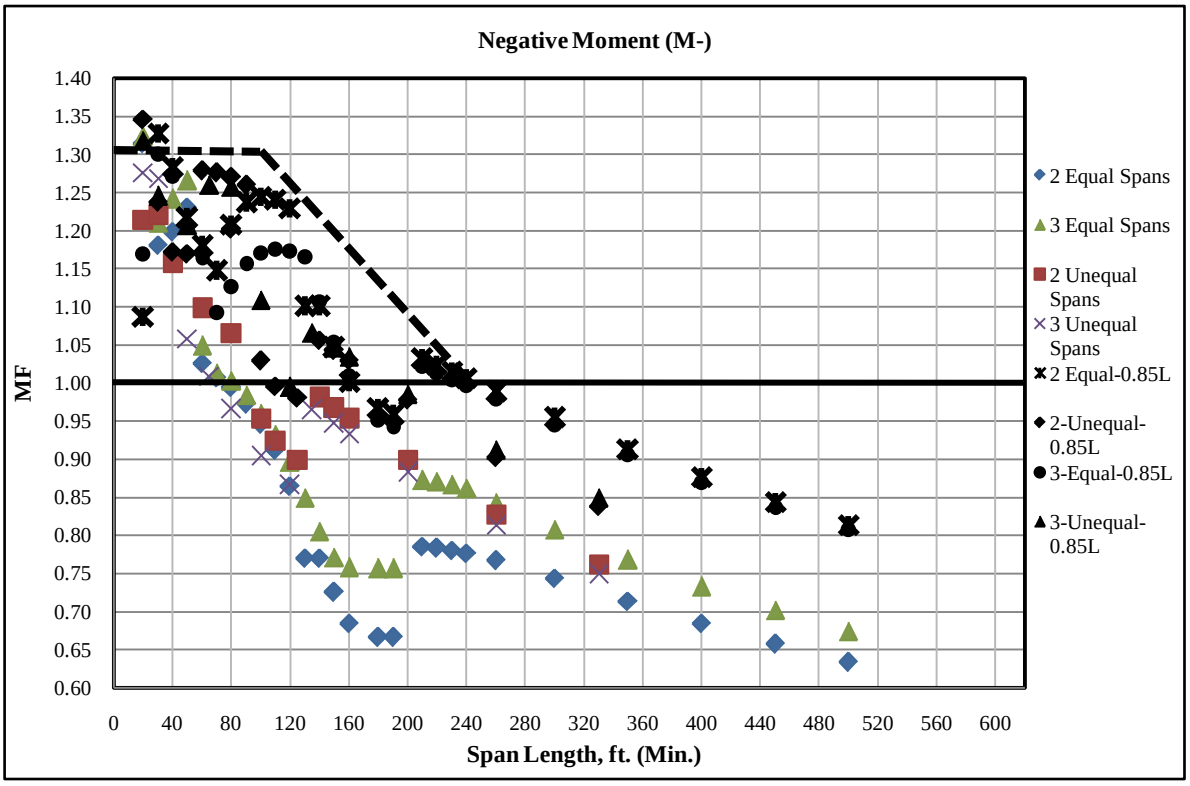

Figure 1.3.2-2: Upper Boundary Lines for Negative Flexure Moment

Condition	MF_F
S ≤ 100 ft.	1.30
100 ft. < S < 240 ft.	Interpolation
S ≥ 240 ft.	1.00

where:

MF_F = Magnification Factor
S = Span Length, use shortest span for unequal continuous spans (feet)

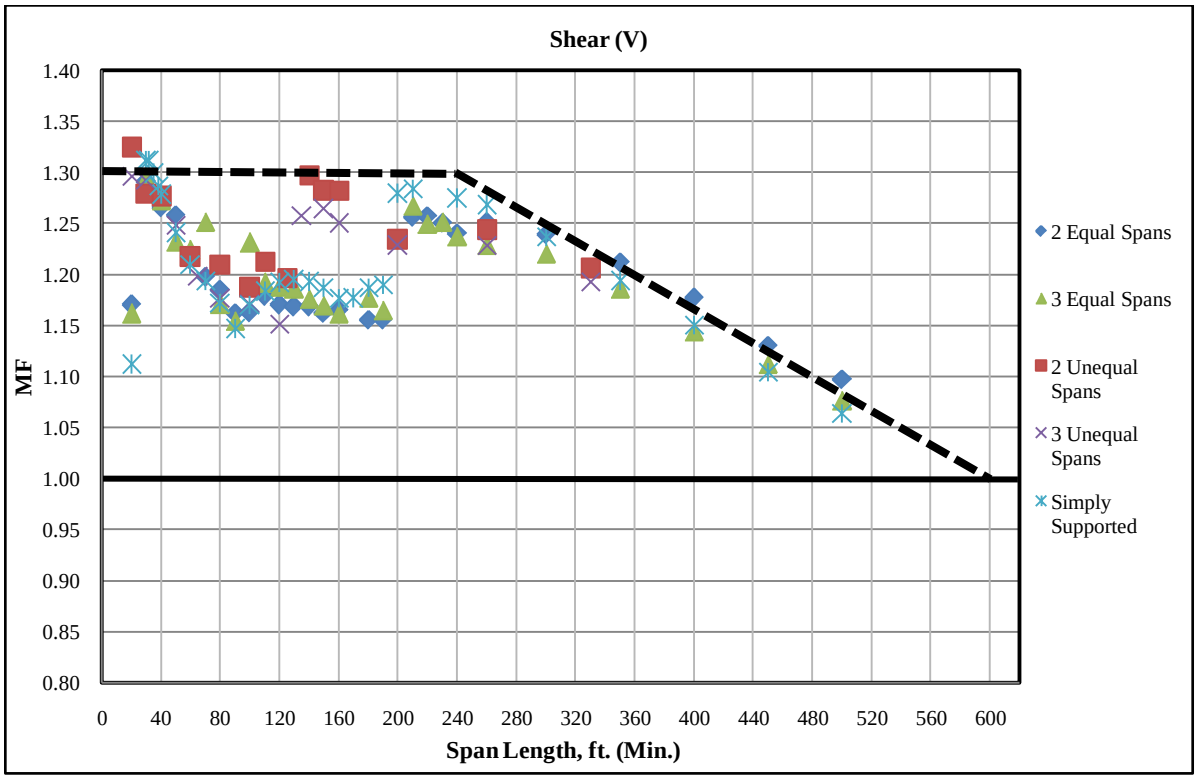

Figure 1.3.2-3: Upper Boundary Lines for Shear

Condition	MF_V
S ≤ 240 ft.	1.30
240 ft. < S < 600 ft.	Interpolation
S ≥ 600 ft.	1.00

where:

MF_V = Magnification Factor
S = Span Length, use shortest span for unequal continuous spans (feet)

1.3.3—Summary of Magnification Factor for Flexure Moment and Shear

Span Length	Magnification Factor	
	Positive Flexure (MF_F)	**Shear (MF_V)**
S ≤ 240 ft.	1.30	1.30
240 ft. < S <600 ft.	Interpolation	Interpolation
S ≥ 600 ft.	1.00	1.00

Span Length	Magnification Factor
	Negative Flexure (MF_F)
S ≤ 100 ft.	1.30
100 ft. < S < 240 ft.	Interpolation
S ≥ 240 ft.	1.00

where:

S = Span Length, use shortest span for unequal continuous spans (feet)

1.3.4—Serviceability of Slab Bridges

The serviceability of slab bridges with spans between 20 and 35 ft. was also investigated to determine whether crack control requirements are satisfied. Four examples of slab bridges are presented in Tables 1.3.4-1 through 1.3.4-4. It is concluded from the results presented in these tables that the crack control requirement is based on the steel stress under service, providing that the maximum steel stress is less than $0.6f_y$. No serviceability requirements are affected by increasing design live load.

Table 1.3.4-1: 20 ft. Long Simply Supported Slab Span

20 FT. SIMPLE SPAN													
Left Edge Beam													
Vehicles	**Section, ft.**	**0**	**2.00**	**4.00**	**6.00**	**8.00**	**10.00**	**12.00**	**14.00**	**16.00**	**18.00**	**20**	**Load factor**
HL93	Strength I (Inv.) M+	N/A	3.05	1.65	1.20	1.02	1.01	1.02	1.20	1.65	3.05	N/A	1.750
	Strength I (Op.) M+	N/A	3.95	2.13	1.56	1.33	1.31	1.33	1.56	2.13	3.95	N/A	1.350
	Service I (Inv.) M+	N/A	5.22	2.86	2.11	1.82	1.79	1.82	2.11	2.86	5.22	N/A	1.000
LASDV 1	Strength II M+	N/A	2.83	1.57	1.18	1.01	0.97	1.01	1.18	1.57	2.83	N/A	1.720
	Service I M+	N/A	4.76	2.68	2.03	1.75	1.70	1.75	2.03	2.68	4.76	N/A	1.000
LASDV 2	Strength II M+	N/A	4.16	2.22	1.67	1.41	1.34	1.41	1.67	2.22	4.16	N/A	1.800
	Service I M+	N/A	7.31	3.97	3.03	2.57	2.45	2.57	3.03	3.97	7.31	N/A	1.000
LASDV 3	Strength II M+	N/A	2.77	1.45	1.06	0.92	0.90	0.92	1.06	1.45	2.77	N/A	1.474
	Service I M+	N/A	3.98	2.13	1.56	1.37	1.35	1.37	1.56	2.13	3.98	N/A	1.000
LASDV 4	Strength II M+	N/A	3.27	1.83	1.43	1.19	1.12	1.19	1.43	1.83	3.27	N/A	1.375
	Service I M+	N/A	4.40	2.49	1.97	1.65	1.57	1.65	1.97	2.49	4.40	N/A	1.000
LASDV 5	Strength II M+	N/A	3.67	2.02	1.58	1.30	1.22	1.30	1.58	2.02	3.67	N/A	1.300
	Service I M+	N/A	4.66	2.61	2.07	1.71	1.62	1.71	2.07	2.61	4.66	N/A	1.000
LASDV 6	Strength II M+	N/A	4.06	2.24	1.61	1.36	1.32	1.36	1.61	2.24	4.06	N/A	1.300
	Service I M+	N/A	5.16	2.89	2.10	1.80	1.75	1.80	2.10	2.89	5.16	N/A	1.000
LASDV 7	Strength II M+	N/A	4.38	2.54	1.82	1.55	1.41	1.55	1.82	2.54	4.38	N/A	1.300
	Service I M+	N/A	5.57	3.28	2.38	2.04	1.86	2.04	2.38	3.28	5.57	N/A	1.000
LASDV 8	Strength II M+	N/A	4.69	2.46	1.85	1.54	1.47	1.54	1.85	2.46	4.69	N/A	1.300
	Service I M+	N/A	5.96	3.18	2.41	2.03	1.95	2.03	2.41	3.18	5.96	N/A	1.000
Interior Beam													
Vehicles	**Section, ft.**	**0**	**2.00**	**4.00**	**6.00**	**8.00**	**10.00**	**12.00**	**14.00**	**16.00**	**18.00**	**20**	**Load factor**
HL93	Strength I (Inv.) M+	N/A	3.09	1.66	1.21	1.03	1.02	1.03	1.21	1.66	3.09	N/A	1.750
	Strength I (Op.) M+	N/A	4.00	2.16	1.57	1.34	1.32	1.34	1.57	2.16	4.00	N/A	1.350
	Service I (Inv.) M+	N/A	5.28	2.89	2.13	1.83	1.81	1.83	2.13	2.89	5.28	N/A	1.000
LASDV 1	Strength II M+	N/A	2.94	1.63	1.22	1.04	1.01	1.04	1.22	1.63	2.94	N/A	1.720
	Service I M+	N/A	4.94	2.78	2.11	1.82	1.77	1.82	2.11	2.78	4.94	N/A	1.000
LASDV 2	Strength II M+	N/A	4.31	2.31	1.74	1.46	1.39	1.46	1.74	2.31	4.31	N/A	1.800
	Service I M+	N/A	7.59	4.12	3.14	2.66	2.54	2.66	3.14	4.12	7.59	N/A	1.000
LASDV 3	Strength II M+	N/A	2.87	1.51	1.10	0.95	0.93	0.95	1.10	1.51	2.87	N/A	1.474
	Service I M+	N/A	4.14	2.21	1.62	1.42	1.40	1.42	1.62	2.21	4.14	N/A	1.000
LASDV 4	Strength II M+	N/A	3.40	1.89	1.48	1.23	1.16	1.23	1.48	1.89	3.40	N/A	1.375
	Service I M+	N/A	4.57	2.59	2.05	1.72	1.63	1.72	2.05	2.59	4.57	N/A	1.000
LASDV 5	Strength II M+	N/A	3.81	2.10	1.64	1.35	1.27	1.35	1.64	2.10	3.81	N/A	1.300
	Service I M+	N/A	4.84	2.71	2.15	1.78	1.68	1.78	2.15	2.71	4.84	N/A	1.000
LASDV 6	Strength II M+	N/A	4.22	2.32	1.67	1.42	1.37	1.42	1.67	2.32	4.22	N/A	1.300
	Service I M+	N/A	5.36	3.00	2.18	1.87	1.82	1.87	2.18	3.00	5.36	N/A	1.000
LASDV 7	Strength II M+	N/A	4.55	2.64	1.89	1.61	1.46	1.61	1.89	2.64	4.55	N/A	1.300
	Service I M+	N/A	5.78	3.40	2.47	2.12	1.93	2.12	2.47	3.40	5.78	N/A	1.000
LASDV 8	Strength II M+	N/A	4.87	2.55	1.92	1.60	1.53	1.60	1.92	2.55	4.87	N/A	1.300
	Service I M+	N/A	6.19	3.30	2.50	2.11	2.02	2.11	2.50	3.30	6.19	N/A	1.000

Table 1.3.4-2: 25 ft. Long Simply Supported Slab Span

25 FT. SIMPLE SPAN													
Left Edge Beam													
Vehicles	**Section, ft.**	**0**	**2.50**	**5.00**	**7.50**	**10.00**	**12.50**	**15.00**	**17.50**	**20.00**	**22.50**	**25**	**Load factor**
HL93	Strength I (Inv.) M+	N/A	3.32	1.74	1.23	1.04	1.01	1.04	1.23	1.74	3.32	N/A	1.750
	Strength I (Op.) M+	N/A	4.30	2.26	1.59	1.35	1.30	1.35	1.59	2.26	4.30	N/A	1.350
	Service I (Inv.) M+	N/A	5.72	3.07	2.20	1.89	1.83	1.89	2.20	3.07	5.72	N/A	1.000
LASDV 1	Strength II M+	N/A	2.66	1.47	1.07	0.95	0.97	0.95	1.07	1.47	2.66	N/A	1.720
	Service I M+	N/A	4.51	2.54	1.88	1.69	1.73	1.69	1.88	2.54	4.51	N/A	1.000
LASDV 2	Strength II M+	N/A	4.39	2.30	1.67	1.39	1.31	1.39	1.67	2.30	4.39	N/A	1.800
	Service I M+	N/A	7.78	4.17	3.08	2.59	2.45	2.59	3.08	4.17	7.78	N/A	1.000
LASDV 3	Strength II M+	N/A	2.89	1.55	1.12	0.95	0.91	0.95	1.12	1.55	2.89	N/A	1.474
	Service I M+	N/A	4.19	2.30	1.69	1.45	1.40	1.45	1.69	2.30	4.19	N/A	1.000
LASDV 4	Strength II M+	N/A	3.12	1.72	1.23	1.02	1.03	1.02	1.23	1.72	3.12	N/A	1.375
	Service I M+	N/A	4.23	2.37	1.73	1.45	1.47	1.45	1.73	2.37	4.23	N/A	1.000
LASDV 5	Strength II M+	N/A	3.65	1.99	1.41	1.19	1.15	1.19	1.41	1.99	3.65	N/A	1.300
	Service I M+	N/A	4.67	2.60	1.88	1.61	1.56	1.61	1.88	2.60	4.67	N/A	1.000
LASDV 6	Strength II M+	N/A	3.78	2.07	1.42	1.22	1.14	1.22	1.42	2.07	3.78	N/A	1.300
	Service I M+	N/A	4.84	2.71	1.89	1.64	1.54	1.64	1.89	2.71	4.84	N/A	1.000
LASDV 7	Strength II M+	N/A	4.74	2.48	1.80	1.49	1.40	1.49	1.80	2.48	4.74	N/A	1.300
	Service I M+	N/A	6.06	3.24	2.40	2.00	1.89	2.00	2.40	3.24	6.06	N/A	1.000
LASDV 8	Strength II M+	N/A	4.79	2.49	1.81	1.49	1.43	1.49	1.81	2.49	4.79	N/A	1.300
	Service I M+	N/A	6.14	3.26	2.41	2.00	1.93	2.00	2.41	3.26	6.14	N/A	1.000
Interior strip													
Vehicles	**Section, ft.**	**0**	**2.50**	**5.00**	**7.50**	**10.00**	**12.50**	**15.00**	**17.50**	**20.00**	**22.50**	**25**	**Load factor**
HL93	Strength I (Inv.) M+	N/A	3.41	1.79	1.26	1.07	1.03	1.07	1.26	1.79	3.41	N/A	1.750
	Strength I (Op.) M+	N/A	4.43	2.32	1.64	1.39	1.34	1.39	1.64	2.32	4.43	N/A	1.350
	Service I (Inv.) M+	N/A	5.88	3.16	2.26	1.94	1.88	1.94	2.26	3.16	5.88	N/A	1.000
LASDV 1	Strength II M+	N/A	2.82	1.55	1.13	1.00	1.02	1.00	1.13	1.55	2.82	N/A	1.720
	Service I M+	N/A	4.78	2.69	1.99	1.79	1.83	1.79	1.99	2.69	4.78	N/A	1.000
LASDV 2	Strength II M+	N/A	4.65	2.44	1.77	1.47	1.39	1.47	1.77	2.44	4.65	N/A	1.800
	Service I M+	N/A	8.24	4.41	3.26	2.74	2.59	2.74	3.26	4.41	8.24	N/A	1.000
LASDV 3	Strength II M+	N/A	3.06	1.64	1.18	1.01	0.97	1.01	1.18	1.64	3.06	N/A	1.474
	Service I M+	N/A	4.44	2.43	1.79	1.54	1.48	1.54	1.79	2.43	4.44	N/A	1.000
LASDV 4	Strength II M+	N/A	3.30	1.82	1.30	1.08	1.09	1.08	1.30	1.82	3.30	N/A	1.375
	Service I M+	N/A	4.47	2.51	1.83	1.53	1.55	1.53	1.83	2.51	4.47	N/A	1.000
LASDV 5	Strength II M+	N/A	3.86	2.10	1.50	1.26	1.22	1.26	1.50	2.10	3.86	N/A	1.300
	Service I M+	N/A	4.94	2.75	1.99	1.70	1.65	1.70	1.99	2.75	4.94	N/A	1.000
LASDV 6	Strength II M+	N/A	4.01	2.19	1.50	1.29	1.20	1.29	1.50	2.19	4.01	N/A	1.300
	Service I M+	N/A	5.13	2.87	2.00	1.73	1.63	1.73	2.00	2.87	5.13	N/A	1.000
LASDV 7	Strength II M+	N/A	5.01	2.62	1.91	1.57	1.48	1.57	1.91	2.62	5.01	N/A	1.300
	Service I M+	N/A	6.42	3.43	2.54	2.12	2.00	2.12	2.54	3.43	6.42	N/A	1.000
LASDV 8	Strength II M+	N/A	5.07	2.64	1.91	1.57	1.52	1.57	1.91	2.64	5.07	N/A	1.300
	Service I M+	N/A	6.49	3.45	2.55	2.12	2.05	2.12	2.55	3.45	6.49	N/A	1.000

Table 1.3.4-3: 30 ft. Long Simply Supported Slab Span

30 FT. SIMPLE SPAN													
Left Edge Beam													
Vehicles	**Section, ft.**	**0**	**3.00**	**6.00**	**9.00**	**12.00**	**15.00**	**18.00**	**21.00**	**24.00**	**27.00**	**30**	**Load factor**
HL93	Strength I (Inv.) M+	N/A	3.59	1.82	1.27	1.06	1.01	1.06	1.27	1.82	3.59	N/A	1.750
	Strength I (Op.) M+	N/A	4.66	2.36	1.65	1.37	1.31	1.37	1.65	2.36	4.66	N/A	1.350
	Service I (Inv.) M+	N/A	6.20	3.23	2.30	1.95	1.87	1.95	2.30	3.23	6.20	N/A	1.000
LASDV 1	Strength II M+	N/A	2.74	1.41	1.00	0.87	0.90	0.87	1.00	1.41	2.74	N/A	1.720
	Service I M+	N/A	4.64	2.46	1.78	1.57	1.64	1.57	1.78	2.46	4.64	N/A	1.000
LASDV 2	Strength II M+	N/A	4.59	2.42	1.73	1.42	1.30	1.42	1.73	2.42	4.59	N/A	1.800
	Service I M+	N/A	8.14	4.40	3.22	2.68	2.48	2.68	3.22	4.40	8.14	N/A	1.000
LASDV 3	Strength II M+	N/A	2.91	1.53	1.12	0.97	0.93	0.97	1.12	1.53	2.91	N/A	1.474
	Service I M+	N/A	4.22	2.29	1.71	1.50	1.44	1.50	1.71	2.29	4.22	N/A	1.000
LASDV 4	Strength II M+	N/A	3.14	1.66	1.16	0.95	0.92	0.95	1.16	1.66	3.14	N/A	1.375
	Service I M+	N/A	4.26	2.31	1.65	1.38	1.34	1.38	1.65	2.31	4.26	N/A	1.000
LASDV 5	Strength II M+	N/A	3.48	1.89	1.30	1.09	1.04	1.09	1.30	1.89	3.48	N/A	1.300
	Service I M+	N/A	4.46	2.48	1.75	1.49	1.44	1.49	1.75	2.48	4.46	N/A	1.000
LASDV 6	Strength II M+	N/A	3.81	2.00	1.37	1.13	1.05	1.13	1.37	2.00	3.81	N/A	1.300
	Service I M+	N/A	4.88	2.64	1.85	1.55	1.44	1.55	1.85	2.64	4.88	N/A	1.000
LASDV 7	Strength II M+	N/A	4.83	2.59	1.81	1.50	1.39	1.50	1.81	2.59	4.83	N/A	1.300
	Service I M+	N/A	6.19	3.41	2.43	2.05	1.92	2.05	2.43	3.41	6.19	N/A	1.000
LASDV 8	Strength II M+	N/A	4.79	2.59	1.85	1.50	1.39	1.50	1.85	2.59	4.79	N/A	1.300
	Service I M+	N/A	6.14	3.41	2.49	2.04	1.91	2.04	2.49	3.41	6.14	N/A	1.000
Interior strip													
Vehicles	**Section, ft.**	**0**	**3.00**	**6.00**	**9.00**	**12.00**	**15.00**	**18.00**	**21.00**	**24.00**	**27.00**	**30**	**Load factor**
HL93	Strength I (Inv.) M+	N/A	3.75	1.90	1.33	1.11	1.05	1.11	1.33	1.90	3.75	N/A	1.750
	Strength I (Op.) M+	N/A	4.87	2.47	1.72	1.43	1.36	1.43	1.72	2.47	4.87	N/A	1.350
	Service I (Inv.) M+	N/A	6.47	3.37	2.40	2.04	1.95	2.04	2.40	3.37	6.47	N/A	1.000
LASDV 1	Strength II M+	N/A	2.94	1.52	1.07	0.93	0.97	0.93	1.07	1.52	2.94	N/A	1.720
	Service I M+	N/A	4.99	2.64	1.91	1.69	1.76	1.69	1.91	2.64	4.99	N/A	1.000
LASDV 2	Strength II M+	N/A	4.94	2.60	1.86	1.52	1.40	1.52	1.86	2.60	4.94	N/A	1.800
	Service I M+	N/A	8.76	4.74	3.47	2.89	2.66	2.89	3.47	4.74	8.76	N/A	1.000
LASDV 3	Strength II M+	N/A	3.13	1.65	1.21	1.04	1.00	1.04	1.21	1.65	3.13	N/A	1.474
	Service I M+	N/A	4.55	2.46	1.84	1.61	1.55	1.61	1.84	2.46	4.55	N/A	1.000
LASDV 4	Strength II M+	N/A	3.38	1.78	1.24	1.03	0.99	1.03	1.24	1.78	3.38	N/A	1.375
	Service I M+	N/A	4.58	2.48	1.77	1.48	1.44	1.48	1.77	2.48	4.58	N/A	1.000
LASDV 5	Strength II M+	N/A	3.74	2.03	1.40	1.17	1.12	1.17	1.40	2.03	3.74	N/A	1.300
	Service I M+	N/A	4.80	2.67	1.88	1.61	1.54	1.61	1.88	2.67	4.80	N/A	1.000
LASDV 6	Strength II M+	N/A	4.10	2.16	1.48	1.22	1.13	1.22	1.48	2.16	4.10	N/A	1.300
	Service I M+	N/A	5.25	2.84	1.99	1.67	1.55	1.67	1.99	2.84	5.25	N/A	1.000
LASDV 7	Strength II M+	N/A	5.19	2.79	1.94	1.61	1.50	1.61	1.94	2.79	5.19	N/A	1.300
	Service I M+	N/A	6.66	3.67	2.62	2.21	2.06	2.21	2.62	3.67	6.66	N/A	1.000
LASDV 8	Strength II M+	N/A	5.15	2.79	1.99	1.61	1.49	1.61	1.99	2.79	5.15	N/A	1.300
	Service I M+	N/A	6.61	3.67	2.68	2.20	2.06	2.20	2.68	3.67	6.61	N/A	1.000

Table 1.3.4-4: 35 ft. Long Simply Supported Slab Span

35 ft SIMPLE SPAN													
Left Edge Beam													
Vehicles	**Section, ft**	**0**	**3.50**	**7.00**	**10.50**	**14.00**	**17.50**	**21.00**	**24.50**	**28.00**	**31.50**	**35**	**Load factor**
HL93	Strength I (Inv.) M+	N/A	3.52	1.85	1.29	1.06	1.01	1.06	1.29	1.85	3.52	N/A	1.750
	Strength I (Op.) M+	N/A	4.56	2.40	1.67	1.38	1.31	1.38	1.67	2.40	4.56	N/A	1.350
	Service I (Inv.) M+	N/A	6.09	3.29	2.36	1.98	1.89	1.98	2.36	3.29	6.09	N/A	1.000
LASDV 1	Strength II M+	N/A	2.73	1.39	0.96	0.82	0.83	0.82	0.96	1.39	2.73	N/A	1.720
	Service I M+	N/A	4.65	2.43	1.73	1.51	1.52	1.51	1.73	2.43	4.65	N/A	1.000
LASDV 2	Strength II M+	N/A	4.31	2.29	1.65	1.40	1.33	1.40	1.65	2.29	4.31	N/A	1.800
	Service I M+	N/A	7.66	4.20	3.10	2.68	2.57	2.68	3.10	4.20	7.66	N/A	1.000
LASDV 3	Strength II M+	N/A	2.89	1.50	1.09	0.92	0.90	0.92	1.09	1.50	2.89	N/A	1.474
	Service I M+	N/A	4.21	2.25	1.68	1.44	1.43	1.44	1.68	2.25	4.21	N/A	1.000
LASDV 4	Strength II M+	N/A	3.07	1.58	1.07	0.90	0.83	0.90	1.07	1.58	3.07	N/A	1.375
	Service I M+	N/A	4.18	2.22	1.54	1.32	1.23	1.32	1.54	2.22	4.18	N/A	1.000
LASDV 5	Strength II M+	N/A	3.56	1.81	1.21	1.01	0.96	1.01	1.21	1.81	3.56	N/A	1.300
	Service I M+	N/A	4.58	2.39	1.65	1.40	1.34	1.40	1.65	2.39	4.58	N/A	1.000
LASDV 6	Strength II M+	N/A	3.86	1.97	1.33	1.09	1.02	1.09	1.33	1.97	3.86	N/A	1.300
	Service I M+	N/A	4.96	2.60	1.80	1.51	1.42	1.51	1.80	2.60	4.96	N/A	1.000
LASDV 7	Strength II M+	N/A	4.88	2.47	1.70	1.44	1.41	1.44	1.70	2.47	4.88	N/A	1.300
	Service I M+	N/A	6.27	3.27	2.31	2.00	1.96	2.00	2.31	3.27	6.27	N/A	1.000
LASDV 8	Strength II M+	N/A	4.70	2.46	1.76	1.48	1.42	1.48	1.76	2.46	4.70	N/A	1.300
	Service I M+	N/A	6.04	3.26	2.40	2.05	1.98	2.05	2.40	3.26	6.04	N/A	1.000
Interior strip													
Vehicles	**Section, ft**	**0**	**3.50**	**7.00**	**10.50**	**14.00**	**17.50**	**21.00**	**24.50**	**28.00**	**31.50**	**35**	**Load factor**
HL93	Strength I (Inv.) M+	N/A	3.73	1.96	1.36	1.12	1.07	1.12	1.36	1.96	3.73	N/A	1.750
	Strength I (Op.) M+	N/A	4.84	2.54	1.77	1.46	1.38	1.46	1.77	2.54	4.84	N/A	1.350
	Service I (Inv.) M+	N/A	6.46	3.48	2.49	2.09	2.00	2.09	2.49	3.48	6.46	N/A	1.000
LASDV 1	Strength II M+	N/A	2.99	1.52	1.05	0.90	0.90	0.90	1.05	1.52	2.99	N/A	1.720
	Service I M+	N/A	5.08	2.65	1.89	1.64	1.66	1.64	1.89	2.65	5.08	N/A	1.000
LASDV 2	Strength II M+	N/A	4.70	2.50	1.80	1.53	1.45	1.53	1.80	2.50	4.70	N/A	1.800
	Service I M+	N/A	8.36	4.58	3.39	2.92	2.80	2.92	3.39	4.58	8.36	N/A	1.000
LASDV 3	Strength II M+	N/A	3.16	1.63	1.19	1.00	0.99	1.00	1.19	1.63	3.16	N/A	1.474
	Service I M+	N/A	4.60	2.45	1.84	1.58	1.56	1.58	1.84	2.45	4.60	N/A	1.000
LASDV 4	Strength II M+	N/A	3.36	1.73	1.17	0.99	0.91	0.99	1.17	1.73	3.36	N/A	1.375
	Service I M+	N/A	4.56	2.42	1.68	1.45	1.34	1.45	1.68	2.42	4.56	N/A	1.000
LASDV 5	Strength II M+	N/A	3.89	1.97	1.33	1.11	1.05	1.11	1.33	1.97	3.89	N/A	1.300
	Service I M+	N/A	5.00	2.61	1.80	1.53	1.46	1.53	1.80	2.61	5.00	N/A	1.000
LASDV 6	Strength II M+	N/A	4.21	2.15	1.45	1.19	1.11	1.19	1.45	2.15	4.21	N/A	1.300
	Service I M+	N/A	5.41	2.84	1.97	1.65	1.55	1.65	1.97	2.84	5.41	N/A	1.000
LASDV 7	Strength II M+	N/A	5.33	2.70	1.86	1.58	1.54	1.58	1.86	2.70	5.33	N/A	1.300
	Service I M+	N/A	6.84	3.57	2.52	2.18	2.14	2.18	2.52	3.57	6.84	N/A	1.000
LASDV 8	Strength II M+	N/A	5.13	2.69	1.93	1.61	1.56	1.61	1.93	2.69	5.13	N/A	1.300
	Service I M+	N/A	6.59	3.56	2.62	2.23	2.17	2.23	2.62	3.56	6.59	N/A	1.000

1.4—INVESTIGATION OF SUPPORT REACTION

Through the course of this analysis it was immediately apparent that there was no single magnification factor that could be suitably applied to every span length combination. The relationship between the magnification factor and span length was obtained using the following steps:

1. Calculate the reactions for different span length combinations.
2. Summarize the results.
3. Find the best equation to cover all data.

1.4.1—Calculate the Reaction for Different Span Length Combinations

The reactions at the interior supports of two-span bridges were calculated using the program RISA 3D V8.1, as shown in Figure 1.4.1-1. The bridge was modeled using frame elements. The lane load was applied as a distributed load. The truck loads were modeled using the moving load function in RISA. In each analysis step, the truck loads were moved through the bridge in both directions. The reactions at the interior support were recorded for further analysis.

The model was analyzed using different span length combinations. The starting length for each span was 20 ft., which is the minimum span length as stated in the definition of bridge in the AASHTO *Manual for Bridge Evaluation* (MBE). First, Span 1 was maintained at 20 ft., while the length of Span 2 was increased by 10 ft. for each analysis step (20 ft., 30 ft., 40 ft. and so on). At each analysis step, the reaction at the interior support was calculated and recorded. The length of Span 2 was increased until the magnification factor was found to be less than 1.00, indicating that the effect of the design vehicle was larger than all the LASDV. Next, Span 1 was maintained at 30 ft., while Span 2 was increased by 10 ft. for each analysis step. This continued until all the span combinations with a magnification factor larger than 1.00 were found.

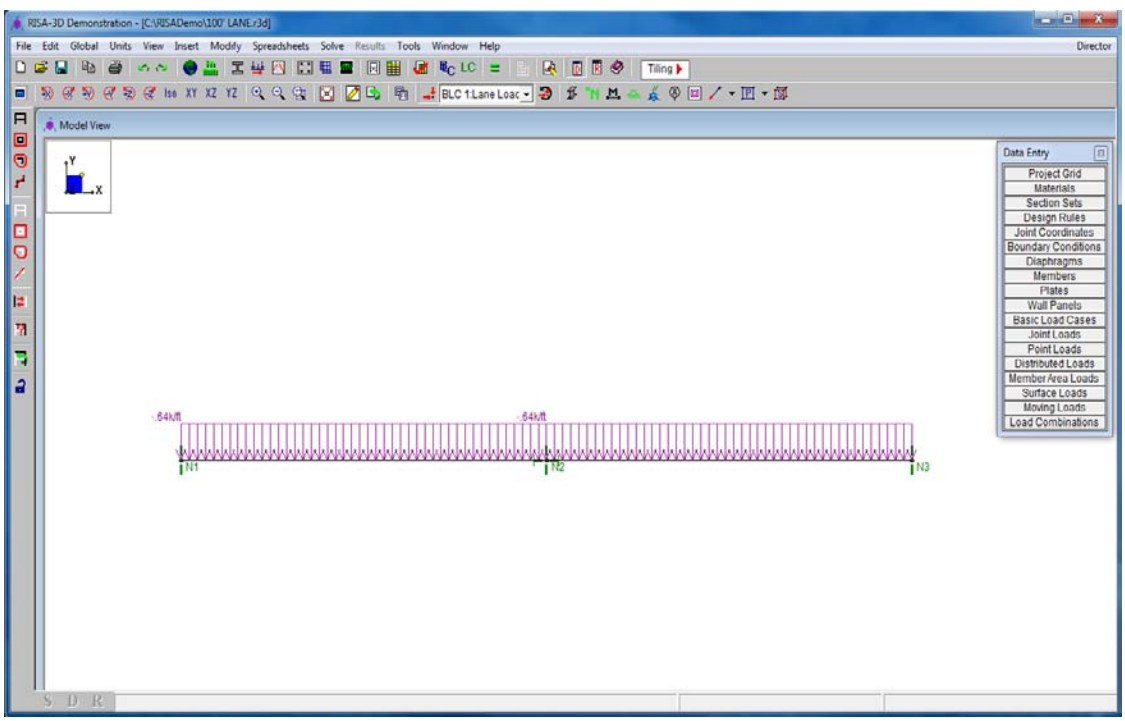

Figure 1.4.1-1: RISA Model

For long spans, only the "2HL93 + lane", "LASDV 5" and "LASDV 7" are included in the study, since the other vehicles are obviously not controlling, and the span length is increased by 20 ft. in each step. A lane load of 0.2 klf is added to spans equal or greater than 200 ft.

1.4.2—Summarize the Results

Tables 1.4.2-1 through 1.4.2-6 summarize the reactions at the interior support for all span combinations: simple or continuous, with or without the effect of impact, and factored or service load.

For each span length, the magnification factor is calculated using the following equation:

$$MF_{SR} = \frac{Max(R_{LASDV})}{Max(R_{Design})}$$

where:

MF_{SR} = Magnification Factor for support reaction

$Max(R_{LASDV})$ = The maximum reaction caused by the eight LASDVs

$Max(R_{Design})$ = The maximum reaction caused by the three HL93 load combinations

Table 1.4.2-1: Factored Reactions for Continuous Spans Without Impact (kips)

	HS20 +lane	0.9(2*HS20 +lane)	Tandem +lane	LASDV 1	LASDV2	LASDV 3	LASDV 4	LASDV 5	LASDV 6	LASDV 7	LASDV 8	**MF**	**Controlling Vehicle**
Load Factor	1.75	1.75	1.75	1.72	1.8	1.474	1.375	1.3	1.3	1.3	1.3		
IM	1.00	1.00	1.00	1.00	1.00	1.00	1.00	1.00	1.00	1.00	1.00		
Span Length	**Design Vehicle Reactions (kips)**			**LASDV Reactions (kips)**									
20-20	121.32	109.19	114.05	152.25	90.81	128.77	146.23	124.93	112.53	88.62	85.31	1.255	LASDV 1
20-30	143.67	129.30	125.13	169.16	114.05	156.89	168.03	144.83	122.23	114.33	106.51	1.177	LASDV 1
20-40	167.26	150.53	140.54	186.52	136.29	180.76	188.80	172.54	133.21	135.78	129.81	1.129	LASDV 4
20-50	191.61	172.45	158.61	203.64	155.81	202.28	208.65	204.78	144.58	156.48	150.02	1.089	LASDV 4
20-60	217.05	195.34	178.76	220.77	173.74	222.60	227.88	244.08	156.19	180.93	168.37	1.125	LASDV 5
20-70	243.77	219.40	200.71	237.98	190.74	242.29	246.83	280.44	184.79	203.33	194.96	1.150	LASDV 5
20-80	271.86	244.68	224.34	255.28	207.19	261.66	265.67	314.62	216.30	224.39	229.58	1.157	LASDV 5
20-90	301.34	272.81	249.54	272.67	223.31	280.84	284.45	347.07	220.40	254.52	270.69	1.152	LASDV 5
20-100	332.21	316.84	276.28	290.12	239.20	299.91	303.21	378.20	281.09	292.87	312.35	1.138	LASDV 5
20-110	364.49	369.06	304.52	307.63	254.95	318.89	321.96	408.34	310.92	340.76	351.70	1.106	LASDV 5
20-120	398.18	422.07	334.22	325.19	270.59	337.83	340.71	437.76	339.55	390.15	389.15	1.037	LASDV 5
20-130	433.27	474.70	365.38	342.78	286.15	356.74	359.45	466.64	367.23	437.39	428.72	0.983	LASDV 5
20-140	469.76	527.24	397.98	360.41	301.66	375.63	378.21	495.09	394.16	482.75	468.86	0.939	LASDV 5
20-150	507.67	579.93	432.02	378.07	317.12	394.50	396.98	523.21	420.51	526.57	507.67	0.908	LASDV 7
20-160	546.99	632.94	467.49	395.75	332.56	413.36	415.75	551.06	446.38	569.00	545.42	0.899	LASDV 7
20-180		740.60						606.15		650.60		0.878	LASDV 7
20-200		851.05						751.45		819.73		0.963	LASDV 7
20-220		964.91						821.73		911.84		0.945	LASDV 7
20-240		1082.60						893.01		1003.42		0.927	LASDV 7
20-260		1204.37						965.34		1094.90		0.909	LASDV 7
20-280		1330.44						1038.79		1186.57		0.892	LASDV 7
20-300		1460.96						1113.40		1278.66		0.875	LASDV 7
20-320		1596.03						1189.18		1371.33		0.859	LASDV 7
30-30	152.13	136.91	128.82	170.25	123.23	163.56	172.13	155.78	121.90	123.20	117.51	1.132	LASDV 4
30-40	165.80	149.22	138.02	177.00	134.24	174.71	180.99	176.73	125.89	134.54	129.17	1.092	LASDV 4
30-50	181.72	163.54	150.10	185.68	145.15	186.47	191.31	203.72	131.48	150.40	140.49	1.121	LASDV 5
30-60	199.05	179.14	164.12	195.17	155.75	198.25	202.19	228.29	147.83	165.29	156.59	1.147	LASDV 5
30-70	217.62	195.86	179.67	205.21	166.09	210.01	213.39	251.19	170.07	179.28	181.57	1.154	LASDV 5
30-80	237.34	214.38	196.56	215.62	176.24	221.84	224.81	272.90	194.49	198.42	210.84	1.150	LASDV 5

	HS20 +lane	0.9(2*HS20 +lane)	Tandem +lane	LASDV 1	LASDV2	LASDV 3	LASDV 4	LASDV 5	LASDV 6	LASDV 7	LASDV 8	**MF**	**Controlling Vehicle**
Load Factor	1.75	1.75	1.75	1.72	1.8	1.474	1.375	1.3	1.3	1.3	1.3		
IM	1.00	1.00	1.00	1.00	1.00	1.00	1.00	1.00	1.00	1.00	1.00		
Span Length	**Design Vehicle Reactions (kips)**			**LASDV Reactions (kips)**									
30-90	258.15	243.00	214.66	226.29	186.33	233.76	236.42	293.72	216.97	224.82	240.66	1.138	LASDV 5
30-100	280.03	280.72	233.88	237.18	196.38	245.73	248.16	313.83	237.94	259.57	268.57	1.118	LASDV 5
30-110	302.93	318.76	254.18	248.22	206.40	257.78	260.02	333.39	257.81	294.95	294.89	1.046	LASDV 5
30-120	326.84	356.23	275.53	259.38	216.43	269.87	271.97	352.51	276.80	328.40	322.15	0.990	LASDV 5
30-130	351.75	393.33	297.89	270.65	226.45	282.02	283.99	371.31	295.12	360.28	350.15	0.944	LASDV 5
30-140	377.65	430.26	321.25	282.01	236.48	294.22	296.09	389.88	312.95	390.79	377.05	0.908	LASDV 7
30-150	404.52	467.21	345.60	293.43	246.52	306.45	308.24	408.26	330.38	420.17	403.06	0.899	LASDV 7
30-170		541.74						444.62		476.25		0.879	LASDV 7
30-190		617.77						480.59		529.54		0.857	LASDV 7
30-210		695.83						591.30		655.84		0.943	LASDV 7
30-230		776.29						638.96		717.84		0.925	LASDV 7
30-250		859.37						687.37		779.60		0.907	LASDV 7
30-270		945.24						736.54		841.39		0.890	LASDV 7
30-290		1034.04						786.50		903.37		0.874	LASDV 7
30-310		1125.83						837.27		965.70		0.858	LASDV 7
40-40	172.70	155.43	143.10	176.86	137.66	176.93	182.08	193.12	125.34	142.71	133.34	1.118	LASDV 5
40-50	183.34	165.01	151.54	180.35	143.24	182.57	186.62	209.83	132.69	151.80	142.31	1.144	LASDV 5
40-60	196.02	176.42	162.07	185.50	149.55	189.41	192.70	225.79	149.94	160.97	161.78	1.152	LASDV 5
40-70	210.11	189.21	174.11	191.59	156.16	196.82	199.61	241.17	169.58	173.39	184.82	1.148	LASDV 5
40-80	225.33	208.92	187.38	198.26	162.94	204.59	207.02	256.07	187.40	194.09	208.31	1.136	LASDV 5
40-90	241.56	239.45	201.73	205.35	169.80	212.61	214.79	270.59	203.84	221.82	230.08	1.120	LASDV 5
40-100	258.73	269.88	217.03	212.76	176.75	220.84	222.81	284.81	219.23	249.98	250.50	1.055	LASDV 5
40-110	276.77	299.58	233.23	220.41	183.77	229.23	231.05	298.77	233.83	276.41	271.52	0.997	LASDV 5
40-120	295.66	328.83	250.28	228.24	190.86	237.76	239.46	312.53	247.79	301.43	293.23	0.950	LASDV 5
40-130	315.35	357.85	268.15	236.23	198.01	246.29	248.00	326.11	261.27	325.21	314.00	0.911	LASDV 5
40-140	335.84	386.75	286.81	244.34	205.21	255.13	256.65	339.57	274.38	347.98	334.02	0.900	LASDV 7
40-160		444.66						366.23		391.14		0.880	LASDV 7
40-180		503.37						392.70		431.85		0.858	LASDV 7
40-200		563.43						477.49		529.24		0.939	LASDV 7
40-220		625.16						513.17		576.33		0.922	LASDV 7
40-240		688.79						549.45		623.13		0.905	LASDV 7

	HS20 +lane	0.9(2*HS20 +lane)	Tandem +lane	LASDV 1	LASDV2	LASDV 3	LASDV 4	LASDV 5	LASDV 6	LASDV 7	LASDV 8	**MF**	**Controlling Vehicle**
Load Factor	1.75	1.75	1.75	1.72	1.8	1.474	1.375	1.3	1.3	1.3	1.3		
IM	1.00	1.00	1.00	1.00	1.00	1.00	1.00	1.00	1.00	1.00	1.00		
Span Length	**Design Vehicle Reactions (kips)**			**LASDV Reactions (kips)**									
40-260		754.48						586.35		669.87		0.888	LASDV 7
40-280		822.32						623.88		716.71		0.872	LASDV 7
40-300		892.41						662.04		763.77		0.856	LASDV 7
40-320		964.78						700.85		811.14		0.841	LASDV 7
50-50	189.90	170.91	157.23	179.99	144.76	183.41	186.89	218.41	142.79	155.83	155.28	1.150	LASDV 5
50-60	199.20	179.28	165.27	182.08	148.01	186.69	189.57	228.38	158.50	162.46	173.78	1.146	LASDV 5
50-70	210.21	192.33	174.94	185.49	152.06	191.12	193.56	238.65	172.83	179.32	192.97	1.135	LASDV 5
50-80	222.48	218.20	185.83	189.73	156.58	196.22	198.33	249.04	186.08	202.59	210.61	1.119	LASDV 5
50-90	235.75	243.71	197.75	194.50	161.35	201.73	203.62	259.45	198.49	226.15	227.06	1.065	LASDV 5
50-100	249.92	268.54	210.57	199.68	166.32	207.56	209.27	269.85	210.22	248.05	243.94	1.005	LASDV 5
50-110	264.91	292.89	224.20	205.18	171.44	213.64	215.21	280.23	221.42	268.65	261.66	0.957	LASDV 5
50-120	280.66	316.93	238.57	210.91	176.69	219.92	221.39	290.57	232.20	288.20	278.57	0.917	LASDV 5
50-130	297.12	340.83	253.65	216.85	182.03	226.37	227.74	300.88	242.64	306.86	294.80	0.900	LASDV 7
50-150		388.62						321.42		342.06		0.880	LASDV 7
50-170		436.84						341.91		375.05		0.859	LASDV 7
50-190		485.98						362.41		406.45		0.836	LASDV 7
50-210		536.37						438.87		492.64		0.918	LASDV 7
50-230		588.24						467.73		530.36		0.902	LASDV 7
50-250		641.72						497.15		567.98		0.885	LASDV 7
50-270		696.92						503.72		605.65		0.869	LASDV 7
50-290		753.90						557.63		643.48		0.854	LASDV 7
50-310		812.71						588.68		681.54		0.839	LASDV 7
60-60	205.69	186.77	171.30	181.72	148.76	187.02	189.57	233.31	167.68	174.15	187.93	1.134	LASDV 5
60-70	214.28	208.88	179.11	183.09	150.84	189.13	191.31	239.72	177.82	193.86	201.88	1.119	LASDV 5
60-80	224.32	230.35	188.23	185.52	153.65	192.22	194.12	246.76	187.57	213.88	215.10	1.071	LASDV 5
60-90	235.45	251.33	198.38	188.63	156.90	195.93	197.61	254.18	196.96	232.41	228.96	1.011	LASDV 5
60-100	247.47	272.01	209.41	192.23	160.45	200.05	201.57	261.84	206.01	249.77	243.48	0.963	LASDV 5
60-110	260.30	292.47	221.22	196.20	164.23	204.49	205.89	269.67	214.77	266.18	257.48	0.922	LASDV 5
60-120	273.85	312.81	233.72	200.46	168.18	209.19	210.50	277.60	223.28	281.82	270.95	0.901	LASDV 7
60-140		353.46						293.67		311.31		0.881	LASDV 7
60-160		394.50						309.91		338.94		0.859	LASDV 7

	HS20 +lane	0.9(2*HS20 +lane)	Tandem +lane	LASDV 1	LASDV2	LASDV 3	LASDV 4	LASDV 5	LASDV 6	LASDV 7	LASDV 8	**MF**	**Controlling Vehicle**
Load Factor	1.75	1.75	1.75	1.72	1.8	1.474	1.375	1.3	1.3	1.3	1.3		
IM	1.00	1.00	1.00	1.00	1.00	1.00	1.00	1.00	1.00	1.00	1.00		
Span Length	**Design Vehicle Reactions (kips)**			**LASDV Reactions (kips)**									
60-180		436.24						326.29		365.16		0.837	LASDV 7
60-200		478.96						390.46		437.99		0.914	LASDV 7
60-220		522.88						414.25		469.57		0.898	LASDV 7
60-240		568.13						438.56		501.02		0.882	LASDV 7
60-260		614.81						463.39		532.50		0.866	LASDV 7
60-280		662.98						488.71		564.09		0.851	LASDV 7
60-300		712.69						514.53		595.88		0.836	LASDV 7
60-320		763.96						540.82		627.91		0.822	LASDV 7
70-70	220.80	226.20	185.35	182.78	151.23	189.23	191.21	242.78	183.73	209.77	211.13	1.073	LASDV 5
70-80	228.98	243.55	193.00	183.74	152.65	190.68	192.42	247.15	190.63	225.13	222.34	1.015	LASDV 5
70-90	238.38	260.91	201.75	185.55	154.70	192.96	194.51	252.22	197.59	239.64	234.06	0.967	LASDV 5
70-100	248.74	278.29	211.38	187.93	157.15	195.77	197.17	257.76	204.51	253.43	245.38	0.926	LASDV 5
70-110	259.91	295.71	221.79	190.74	159.90	198.96	200.25	263.62	211.36	266.60	256.48	0.902	LASDV 7
70-120	271.79	313.19	232.87	193.89	162.87	202.48	203.67	269.71	218.12	279.26	267.30	0.892	LASDV 7
70-130		330.77						275.97		291.49		0.881	LASDV 7
70-150		366.30						288.85		314.91		0.860	LASDV 7
70-170		402.55						302.08		337.21		0.838	LASDV 7
70-190		439.67						315.57		358.64		0.816	LASDV 7
70-210		477.80						377.02		427.16		0.894	LASDV 7
70-230		517.08						397.56		454.12		0.878	LASDV 7
70-250		557.59						418.61		481.09		0.863	LASDV 7
70-270		599.39						440.15		508.16		0.848	LASDV 7
70-290		642.53						462.15		535.40		0.833	LASDV 7
70-310		687.02						484.60		562.86		0.819	LASDV 7
80-80	235.52	257.41	199.38	183.46	152.86	190.69	192.30	249.15	194.62	236.26	231.07	0.968	LASDV 5
80-90	243.44	271.72	206.93	184.17	153.89	191.74	193.18	252.27	199.55	247.39	239.92	0.928	LASDV 5
80-100	252.42	286.37	215.41	185.58	155.43	193.48	194.78	256.07	204.70	258.22	248.71	0.902	LASDV 7
80-110	262.23	301.29	224.66	187.46	157.35	195.68	196.87	260.34	209.97	268.76	257.42	0.892	LASDV 7
80-120		316.44						264.95		279.02		0.882	LASDV 7
80-140		347.39						274.89		298.83		0.860	LASDV 7
80-160		379.20						285.48		317.86		0.838	LASDV 7

	HS20 +lane	0.9(2*HS20 +lane)	Tandem +lane	LASDV 1	LASDV2	LASDV 3	LASDV 4	LASDV 5	LASDV 6	LASDV 7	LASDV 8	**MF**	**Controlling Vehicle**
Load Factor	1.75	1.75	1.75	1.72	1.8	1.474	1.375	1.3	1.3	1.3	1.3		
IM	1.00	1.00	1.00	1.00	1.00	1.00	1.00	1.00	1.00	1.00	1.00		
Span Length	**Design Vehicle Reactions (kips)**			**LASDV Reactions (kips)**									
80-180		411.90						296.49		336.25		0.816	LASDV 7
80-200		445.56						350.06		396.37		0.890	LASDV 7
80-220		480.25						367.65		419.85		0.874	LASDV 7
80-240		516.05						385.77		443.35		0.859	LASDV 7
80-260		552.99						404.38		466.95		0.844	LASDV 7
80-280		591.13						423.45		490.72		0.830	LASDV 7
80-300		630.47						442.95		514.69		0.816	LASDV 7
80-320		671.03						462.88		538.90		0.803	LASDV 7
90-90	250.03	283.39	213.40	183.94	153.99	191.70	193.04	253.63	202.35	255.42	246.24	0.901	LASDV 7
90-100	257.77	295.69	133.26	184.48	154.76	192.49	193.72	255.95	205.98	263.73	252.86	0.892	LASDV 7
90-110		308.47						258.88		272.03		0.882	LASDV 7
90-130		335.17						265.98		288.46		0.861	LASDV 7
90-150		363.10						274.15		304.54		0.839	LASDV 7
90-170		392.07						283.01		320.28		0.817	LASDV 7
90-190		422.07						292.34		335.72		0.795	LASDV 7
90-210		453.06						345.23		394.10		0.870	LASDV 7
90-230		485.08						360.97		414.81		0.855	LASDV 7
90-250		518.16						377.21		435.64		0.841	LASDV 7
90-270		552.33						393.92		456.64		0.827	LASDV 7
90-290		587.60						411.07		477.84		0.813	LASDV 7
90-310		623.99						428.64		499.27		0.800	LASDV 7
100-100	264.39	305.91	227.42	184.28	154.81	192.43	193.58	256.90	208.02	269.70	257.56	0.882	LASDV 7
100-120		328.29						260.99		282.57		0.861	LASDV 7
100-140		352.51						266.79		295.79		0.839	LASDV 7
100-160		378.13						273.63		309.07		0.817	LASDV 7
100-180		404.92						281.15		322.30		0.796	LASDV 7
100-200		432.78						328.16		374.44		0.865	LASDV 7
100-220		461.66						341.87		392.80		0.851	LASDV 7
100-240		491.55						356.13		411.32		0.837	LASDV 7
120-120		344.53						261.25		289.09		0.839	LASDV 7
120-140		363.52						263.91		297.29		0.818	LASDV 7

	HS20 +lane	0.9(2*HS20 +lane)	Tandem +lane	LASDV 1	LASDV2	LASDV 3	LASDV 4	LASDV 5	LASDV 6	LASDV 7	LASDV 8	**MF**	**Controlling Vehicle**
Load Factor	1.75	1.75	1.75	1.72	1.8	1.474	1.375	1.3	1.3	1.3	1.3		
IM	1.00	1.00	1.00	1.00	1.00	1.00	1.00	1.00	1.00	1.00	1.00		
Span Length	**Design Vehicle Reactions (kips)**			**LASDV Reactions (kips)**									
120-160		384.44						267.97		306.29		0.797	LASDV 7
120-180		406.85						272.96		315.73		0.776	LASDV 7
120-200		430.50						315.42		362.26		0.841	LASDV 7
140-140		378.13						263.93		301.30		0.797	LASDV 7
140-160		395.20						265.77		306.85		0.776	LASDV 7
140-180		414.09						268.77		313.30		0.757	LASDV 7
160-160		408.93						265.70		309.45		0.757	LASDV 7
160-180		424.82						267.04		313.41		0.738	LASDV 7
170-170		423.65						266.37		312.55		0.738	LASDV 7
200-200		466.09						332.81		384.33		0.825	LASDV 7
200-250		505.06						344.86		400.01		0.792	LASDV 7
200-300		550.85						361.12		419.90		0.762	LASDV 7
250-250		533.54						350.44		407.10		0.763	LASDV 7
250-300		570.11						361.17		419.89		0.737	LASDV 7
250-350		613.87						375.11		436.10		0.710	LASDV 7
300-300		599.00						367.44		426.97		0.713	LASDV 7
300-350		634.26						385.08		445.89		0.703	LASDV 7
500-500		854.67						433.56		497.36		0.582	LASDV 7

Table 1.4.2-2: Factored Reactions for Continuous Spans With Impact (kips)

	HS20 +lane	0.9(2*HS20 +lane)	Tandem +lane	LASDV 1	LASDV 2	LASDV 3	LASDV 4	LASDV 5	LASDV 6	LASDV 7	LASDV 8	**MF**	**Controlling Vehicle**
Load Factor	1.75	1.75	1.75	1.72	1.8	1.474	1.375	1.3	1.3	1.3	1.3		
IM	1.33TL+ 1.0LL	1.33TL+ 1.0LL	1.33TL+ 1.0LL	1.33	1.33	1.33	1.33	1.33	1.33	1.33	1.33		
Span Length	**Design Vehicle Reactions (kips)**			**LASDV Reactions (kips)**									
20-20	152.17	136.95	142.50	202.50	120.77	171.26	194.48	166.16	149.66	117.87	113.47	1.331	LASDV 1
20-30	179.19	161.27	154.54	224.99	151.68	208.66	223.49	192.62	162.56	152.06	141.66	1.256	LASDV 1
20-40	207.26	186.54	171.73	248.07	181.26	240.41	251.11	229.48	177.17	180.58	172.64	1.212	LASDV 4
20-50	235.83	212.25	191.93	270.85	207.22	269.03	277.50	272.36	192.29	208.11	199.53	1.177	LASDV 4
20-60	265.34	238.81	214.42	293.62	231.07	296.05	303.07	324.63	207.73	240.63	223.93	1.223	LASDV 5
20-70	296.09	266.48	238.82	316.51	253.68	322.25	328.29	372.99	245.77	270.43	259.29	1.260	LASDV 5
20-80	328.18	295.36	264.98	339.52	275.57	348.01	353.34	418.44	287.68	298.44	305.34	1.275	LASDV 5
20-90	361.64	327.62	292.76	362.65	297.00	373.52	378.32	461.60	293.14	338.52	360.01	1.276	LASDV 5
20-100	396.51	380.59	322.12	385.86	318.14	398.87	403.27	503.01	373.85	389.51	415.43	1.269	LASDV 5
20-110	432.77	444.05	353.00	409.15	339.08	424.13	428.21	543.10	413.53	453.21	467.76	1.223	LASDV 5
20-120	470.44	508.12	385.37	432.50	359.88	449.32	453.14	582.23	451.60	518.90	517.57	1.146	LASDV 5
20-130	509.51	571.29	419.22	455.89	380.58	474.46	478.07	620.63	488.41	581.73	570.20	1.086	LASDV 5
20-140	549.98	633.91	454.51	479.34	401.20	499.58	503.02	658.47	524.24	642.06	623.58	1.039	LASDV 5
20-150	591.88	696.31	491.25	502.83	421.78	524.69	527.98	695.87	559.28	700.34	675.20	1.006	LASDV 7
20-160	635.19	758.73	529.45	526.35	442.30	549.77	552.95	732.91	593.69	756.77	725.41	0.997	LASDV 7
20-180		884.48						806.18		865.29		0.978	LASDV 7
20-200		1012.29						969.46		1060.27		1.047	LASDV 7
20-220		1142.97						1057.58		1177.42		1.030	LASDV 7
20-240		1277.06						1146.59		1293.43		1.013	LASDV 7
20-260		1414.93						1236.58		1408.88		0.996	LASDV 7
20-280		1556.85						1327.61		1524.16		0.979	LASDV 7
20-300		1703.02						1419.77		1639.57		0.963	LASDV 7
20-320		1853.59						1513.06		1755.32		0.947	LASDV 7
30-30	188.50	169.65	157.51	226.43	163.90	217.53	228.94	207.18	162.12	163.86	156.28	1.215	LASDV 4
30-40	204.11	183.70	167.16	235.42	178.54	232.37	240.72	235.05	167.44	178.94	171.79	1.179	LASDV 4
30-50	222.25	200.03	180.20	246.95	193.05	248.00	254.44	270.95	174.87	200.03	186.86	1.219	LASDV 5
30-60	241.90	217.71	195.44	259.57	207.15	263.67	268.92	303.62	196.61	219.83	208.27	1.255	LASDV 5
30-70	262.86	236.58	212.39	272.93	220.89	279.31	283.80	334.08	226.20	238.44	241.49	1.271	LASDV 5

	HS20 +lane	0.9(2*HS20 +lane)	Tandem +lane	LASDV 1	LASDV 2	LASDV 3	LASDV 4	LASDV 5	LASDV 6	LASDV 7	LASDV 8	**MF**	**Controlling Vehicle**
Load Factor	1.75	1.75	1.75	1.72	1.8	1.474	1.375	1.3	1.3	1.3	1.3		
IM	1.33TL+ 1.0LL	1.33TL+ 1.0LL	1.33TL+ 1.0LL	1.33	1.33	1.33	1.33	1.33	1.33	1.33	1.33		
Span Length	**Design Vehicle Reactions (kips)**			**LASDV Reactions (kips)**									
30-80	285.01	257.53	230.77	286.77	234.40	295.05	299.00	362.96	258.67	263.89	280.41	1.273	LASDV 5
30-90	308.29	291.64	250.43	300.97	247.82	310.89	314.43	390.65	288.57	299.02	320.08	1.267	LASDV 5
30-100	332.65	337.55	271.28	315.44	261.18	326.83	330.05	417.40	316.46	345.23	357.20	1.237	LASDV 5
30-110	358.07	383.61	293.24	330.13	274.52	342.84	345.82	443.40	342.88	392.28	392.21	1.156	LASDV 5
30-120	384.53	428.63	316.27	344.98	287.85	358.93	361.71	468.83	368.14	436.78	428.47	1.094	LASDV 5
30-130	411.99	472.88	340.35	359.97	301.18	375.09	377.71	493.85	392.51	479.17	465.70	1.044	LASDV 5
30-140	440.45	516.61	365.45	375.07	314.52	391.31	393.80	518.54	416.23	519.75	501.48	1.006	LASDV 7
30-150	469.90	560.10	391.54	390.26	327.87	407.58	409.96	542.99	439.40	558.83	536.07	0.998	LASDV 7
30-170		647.06						591.34		633.41		0.979	LASDV 7
30-190		734.90						639.19		704.29		0.958	LASDV 7
30-210		824.35						761.69		847.52		1.028	LASDV 7
30-230		915.85						821.07		925.97		1.011	LASDV 7
30-250		1009.74						881.16		1003.83		0.994	LASDV 7
30-270		1106.23						941.99		1081.43		0.978	LASDV 7
30-290		1205.50						1003.57		1159.01		0.961	LASDV 7
30-310		1307.65						1065.95		1236.77		0.946	LASDV 7
40-40	211.24	190.11	171.87	235.22	183.09	235.32	242.16	256.84	166.71	189.81	177.34	1.216	LASDV 5
40-50	222.87	200.59	180.57	239.86	190.51	242.82	248.21	279.07	176.48	201.89	189.28	1.252	LASDV 5
40-60	236.86	213.17	191.71	246.72	198.90	251.92	256.28	300.30	199.42	214.09	215.16	1.268	LASDV 5
40-70	252.43	227.34	204.55	254.82	207.69	261.76	265.48	320.75	225.54	230.61	245.80	1.271	LASDV 5
40-80	269.23	250.45	218.76	263.69	216.70	272.10	275.34	340.57	249.24	258.13	277.06	1.265	LASDV 5
40-90	287.11	287.72	234.12	273.12	225.83	282.77	285.66	359.88	271.11	295.03	306.00	1.251	LASDV 5
40-100	305.98	324.62	250.52	282.97	235.07	293.72	296.34	378.80	291.57	332.47	333.16	1.167	LASDV 5
40-110	325.77	360.35	267.87	293.14	244.41	304.88	307.30	397.37	310.99	367.63	361.12	1.103	LASDV 5
40-120	346.44	395.25	286.10	303.56	253.84	316.22	318.48	415.66	329.56	400.91	389.99	1.052	LASDV 5
40-130	367.95	429.63	305.18	314.19	263.35	327.57	329.84	433.72	347.48	432.53	417.63	1.010	LASDV 5
40-140	390.28	463.62	325.07	324.97	272.93	339.33	341.35	451.62	364.92	462.82	444.25	0.998	LASDV 7
40-160		531.16						487.09		520.22		0.979	LASDV 7
40-180		598.90						522.29		574.36		0.959	LASDV 7
40-200		667.59						615.77		684.60		1.025	LASDV 7

	HS20 +lane	0.9(2*HS20 +lane)	Tandem +lane	LASDV 1	LASDV 2	LASDV 3	LASDV 4	LASDV 5	LASDV 6	LASDV 7	LASDV 8	**MF**	**Controlling Vehicle**
Load Factor	1.75	1.75	1.75	1.72	1.8	1.474	1.375	1.3	1.3	1.3	1.3		
IM	1.33TL+ 1.0LL	1.33TL+ 1.0LL	1.33TL+ 1.0LL	1.33	1.33	1.33	1.33	1.33	1.33	1.33	1.33		
Span Length	**Design Vehicle Reactions (kips)**			**LASDV Reactions (kips)**									
40-220		737.67						660.11		744.12		1.009	LASDV 7
40-240		809.44						705.04		803.04		0.992	LASDV 7
40-260		883.11						750.58		861.66		0.976	LASDV 7
40-280		958.81						796.75		920.21		0.960	LASDV 7
40-300		1036.66						843.54		978.84		0.944	LASDV 7
40-320		1116.72						890.97		1037.65		0.929	LASDV 7
50-50	229.49	206.54	186.04	239.39	192.53	243.93	248.56	290.48	189.91	207.26	206.52	1.266	LASDV 5
50-60	239.37	215.43	194.25	242.16	196.85	248.30	252.13	303.74	210.80	216.07	231.13	1.269	LASDV 5
50-70	251.25	230.29	204.33	246.70	202.24	254.19	257.43	317.40	229.86	238.49	256.65	1.263	LASDV 5
50-80	264.54	261.99	215.79	252.34	208.25	260.97	263.79	331.22	247.48	269.44	280.11	1.252	LASDV 5
50-90	278.93	292.98	228.39	258.69	214.60	268.31	270.81	345.07	263.99	300.78	301.99	1.178	LASDV 5
50-100	294.30	322.87	241.96	265.58	221.20	276.06	278.33	358.90	279.60	329.91	324.45	1.112	LASDV 5
50-110	310.56	351.94	256.41	272.88	228.01	284.14	286.23	372.70	294.49	357.30	348.00	1.059	LASDV 5
50-120	327.62	380.42	271.64	280.52	234.99	292.50	294.44	386.46	308.83	383.30	370.49	1.016	LASDV 5
50-130	345.43	408.54	287.62	288.41	242.11	301.07	302.90	400.17	322.72	408.13	392.08	0.999	LASDV 7
50-150		464.22						427.49		454.94		0.980	LASDV 7
50-170		519.79						454.74		498.81		0.960	LASDV 7
50-190		575.90						482.01		540.58		0.939	LASDV 7
50-210		633.00						565.23		636.75		1.006	LASDV 7
50-230		691.39						600.88		684.18		0.990	LASDV 7
50-250		751.25						637.09		731.30		0.973	LASDV 7
50-270		812.72						642.73		778.31		0.958	LASDV 7
50-290		875.89						711.18		825.36		0.942	LASDV 7
50-310		940.83						749.05		872.55		0.927	LASDV 7
60-60	245.87	223.47	200.13	241.69	197.85	248.73	252.13	310.31	223.01	231.61	249.94	1.262	LASDV 5
60-70	254.84	250.67	208.06	243.51	200.62	251.54	254.45	318.83	236.50	257.84	268.50	1.251	LASDV 5
60-80	265.49	276.78	217.48	246.74	204.35	255.65	258.18	328.19	249.47	284.46	286.08	1.186	LASDV 5
60-90	277.36	302.06	228.06	250.88	208.68	260.58	262.82	338.06	261.95	309.10	304.52	1.119	LASDV 5
60-100	290.22	326.75	239.60	255.66	213.40	266.06	268.09	348.25	273.99	332.19	323.83	1.066	LASDV 5
60-110	303.97	350.98	251.99	260.94	218.42	271.97	273.84	358.66	285.65	354.02	342.45	1.022	LASDV 5

	HS20 +lane	0.9(2*HS20 +lane)	Tandem +lane	LASDV 1	LASDV 2	LASDV 3	LASDV 4	LASDV 5	LASDV 6	LASDV 7	LASDV 8	**MF**	**Controlling Vehicle**
Load Factor	1.75	1.75	1.75	1.72	1.8	1.474	1.375	1.3	1.3	1.3	1.3		
IM	1.33TL+ 1.0LL	1.33TL+ 1.0LL	1.33TL+ 1.0LL	1.33	1.33	1.33	1.33	1.33	1.33	1.33	1.33		
Span Length	**Design Vehicle Reactions (kips)**			**LASDV Reactions (kips)**									
60-120	318.50	374.89	265.13	266.61	223.68	278.23	279.97	369.21	296.96	374.82	360.36	1.000	LASDV 7
60-140		422.21						390.58		414.04		0.981	LASDV 7
60-160		469.44						412.18		450.78		0.960	LASDV 7
60-180		517.02						433.97		485.66		0.939	LASDV 7
60-200		565.33						503.59		566.80		1.003	LASDV 7
60-220		614.67						532.87		606.45		0.987	LASDV 7
60-240		665.21						562.70		645.78		0.971	LASDV 7
60-260		717.09						593.07		684.99		0.955	LASDV 7
60-280		770.39						623.97		724.22		0.940	LASDV 7
60-300		825.17						655.37		763.57		0.925	LASDV 7
60-320		881.48						687.27		803.10		0.911	LASDV 7
70-70	261.33	271.75	214.19	243.09	201.14	251.68	254.31	322.90	244.36	278.99	280.81	1.188	LASDV 5
70-80	269.78	292.64	221.93	244.37	203.03	253.61	255.92	328.71	253.54	299.42	295.71	1.123	LASDV 5
70-90	279.63	313.34	230.91	246.78	205.75	256.63	258.69	335.45	262.79	318.72	311.30	1.071	LASDV 5
70-100	290.56	333.88	240.88	249.95	209.01	260.37	262.23	342.82	272.00	337.06	326.35	1.027	LASDV 5
70-110	302.38	354.33	251.69	253.68	212.66	264.62	266.33	350.61	281.11	354.58	341.11	1.001	LASDV 7
70-120	315.00	374.70	263.23	257.88	216.62	269.30	270.88	358.71	290.10	371.42	355.50	0.991	LASDV 7
70-130		395.06						367.04		387.68		0.981	LASDV 7
70-150		435.89						384.17		418.83		0.961	LASDV 7
70-170		477.13						401.77		448.50		0.940	LASDV 7
70-190		519.02						419.71		476.99		0.919	LASDV 7
70-210		561.76						485.67		552.37		0.983	LASDV 7
70-230		605.53						510.79		586.01		0.968	LASDV 7
70-250		650.46						536.46		619.55		0.952	LASDV 7
70-270		696.61						562.65		653.10		0.938	LASDV 7
70-290		744.06						589.34		686.76		0.923	LASDV 7
70-310		792.82						616.50		720.59		0.909	LASDV 7
80-80	276.30	309.11	228.23	244.01	203.31	253.62	255.75	331.37	258.85	314.22	307.33	1.072	LASDV 5
80-90	284.41	325.96	235.84	244.95	204.67	255.01	256.93	335.52	265.40	329.03	319.10	1.029	LASDV 5
80-100	293.73	343.09	244.51	246.81	206.73	257.32	259.06	340.57	272.25	343.44	330.79	1.001	LASDV 7

	HS20 +lane	0.9(2*HS20 +lane)	Tandem +lane	LASDV 1	LASDV 2	LASDV 3	LASDV 4	LASDV 5	LASDV 6	LASDV 7	LASDV 8	**MF**	**Controlling Vehicle**
Load Factor	1.75	1.75	1.75	1.72	1.8	1.474	1.375	1.3	1.3	1.3	1.3		
IM	1.33TL+ 1.0LL	1.33TL+ 1.0LL	1.33TL+ 1.0LL	1.33	1.33	1.33	1.33	1.33	1.33	1.33	1.33		
Span Length	**Design Vehicle Reactions (kips)**			**LASDV Reactions (kips)**									
80-110	303.99	360.41	254.02	249.32	209.27	260.25	261.84	346.25	279.26	357.45	342.36	0.992	LASDV 7
80-120		377.91						352.39		371.10		0.982	LASDV 7
80-140		413.37						365.60		397.45		0.961	LASDV 7
80-160		449.46						379.69		422.75		0.941	LASDV 7
80-180		486.27						394.33		447.21		0.920	LASDV 7
80-200		523.92						451.64		513.23		0.980	LASDV 7
80-220		562.49						473.05		542.48		0.964	LASDV 7
80-240		602.09						495.06		571.64		0.949	LASDV 7
80-260		642.79						517.61		600.83		0.935	LASDV 7
80-280		684.64						540.67		630.14		0.920	LASDV 7
80-300		727.68						564.20		659.61		0.906	LASDV 7
80-320		771.91						588.18		689.29		0.893	LASDV 7
90-90	290.97	339.50	242.26	244.64	204.81	254.96	256.75	337.33	269.13	339.71	327.50	1.001	LASDV 7
90-100	298.86	353.69	133.26	245.36	205.83	256.01	257.64	340.41	273.95	350.76	336.30	0.992	LASDV 7
90-110		368.37						344.31		361.80		0.982	LASDV 7
90-130		398.80						353.75		383.65		0.962	LASDV 7
90-150		430.37						364.63		405.03		0.941	LASDV 7
90-170		462.89						376.41		425.98		0.920	LASDV 7
90-190		496.34						388.81		446.51		0.900	LASDV 7
90-210		530.71						444.90		509.89		0.961	LASDV 7
90-230		566.05						463.92		535.53		0.946	LASDV 7
90-250		602.40						483.52		561.24		0.932	LASDV 7
90-270		639.81						503.65		587.07		0.918	LASDV 7
90-290		678.31						524.27		613.07		0.904	LASDV 7
90-310		717.91						545.34		639.28		0.890	LASDV 7
100-100	305.45	365.29	256.28	245.09	205.90	255.93	257.47	341.68	276.66	358.70	342.56	0.982	LASDV 7
100-120		390.58						347.12		375.81		0.962	LASDV 7
100-140		417.81						354.83		393.40		0.942	LASDV 7
100-160		446.44						363.93		411.06		0.921	LASDV 7
100-180		476.20						373.94		428.66		0.900	LASDV 7

	HS20 +lane	0.9(2*HS20 +lane)	Tandem +lane	LASDV 1	LASDV 2	LASDV 3	LASDV 4	LASDV 5	LASDV 6	LASDV 7	LASDV 8	**MF**	**Controlling Vehicle**
Load Factor	1.75	1.75	1.75	1.72	1.8	1.474	1.375	1.3	1.3	1.3	1.3		
IM	1.33TL+ 1.0LL	1.33TL+ 1.0LL	1.33TL+ 1.0LL	1.33	1.33	1.33	1.33	1.33	1.33	1.33	1.33		
Span Length	**Design Vehicle Reactions (kips)**			**LASDV Reactions (kips)**									
100-200		507.00						423.59		485.13		0.957	LASDV 7
100-220		538.78						440.06		507.80		0.942	LASDV 7
100-240		571.55						457.18		530.59		0.928	LASDV 7
120-120		408.33						347.47		384.50		0.942	LASDV 7
120-140		429.18						351.00		395.40		0.921	LASDV 7
120-160		452.13						356.40		407.37		0.901	LASDV 7
120-180		476.67						363.03		419.92		0.881	LASDV 7
120-200		502.50						407.36		469.65		0.935	LASDV 7
140-140		444.71						351.03		400.72		0.901	LASDV 7
140-160		463.03						353.48		408.11		0.881	LASDV 7
140-180		483.37						357.47		416.69		0.862	LASDV 7
160-160		477.35						353.39		411.57		0.862	LASDV 7
160-180		494.13						355.17		416.83		0.844	LASDV 7
170-170		492.78						354.27		415.69		0.844	LASDV 7
200-200		536.74						421.19		489.71		0.912	LASDV 7
200-250		577.25						434.29		507.64		0.879	LASDV 7
250-250		605.66						439.27		514.63		0.850	LASDV 7
500-500		928.81						523.01		607.86		0.654	LASDV 7

Table 1.4.2-3: Factored Reactions for Simply Supported Spans Without Impact (kips)

	HS20 +lane	0.9(2*HS20 +lane)	Tandem +lane	LASDV 1	LASDV 2	LASDV 3	LASDV 4	LASDV 5	LASDV 6	LASDV 7	LASDV 8	**MF**	**Controlling Vehicle**
Load Factor	1.75	1.75	1.75	1.72	1.8	1.474	1.375	1.3	1.3	1.3	1.3		
IM	1.00	1.00	1.00	1.00	1.00	1.00	1.00	1.00	1.00	1.00	1.00		
Span Length	**Design Vehicle Reactions (kips)**			**LASDV Reactions (kips)**									
20-20	99.40	89.46	101.15	118.98	71.46	107.16	120.83	103.13	94.25	69.76	69.98	1.195	LASDV 4
20-30	118.07	106.26	109.67	138.26	91.44	130.12	133.62	117.96	100.75	89.92	84.14	1.171	LASDV 1
20-40	130.20	117.18	116.73	148.54	104.22	143.82	145.89	132.49	106.60	102.05	97.66	1.141	LASDV 1
20-50	141.68	127.51	123.20	154.71	113.98	152.04	153.91	144.85	110.11	111.41	107.99	1.092	LASDV 1
20-60	151.20	136.08	129.38	158.83	120.48	158.71	159.25	158.19	118.08	120.94	114.87	1.053	LASDV 4
20-70	159.60	143.64	135.40	161.77	125.13	163.98	163.07	168.79	129.72	128.79	125.77	1.058	LASDV 5
20-80	167.30	151.83	141.31	164.77	128.61	167.93	165.93	177.97	140.73	137.01	138.50	1.064	LASDV 5
20-90	174.53	163.80	147.16	167.10	131.32	171.01	169.25	185.11	150.44	147.09	151.10	1.061	LASDV 5
20-100	181.44	178.42	152.95	168.96	133.63	173.47	171.90	190.87	158.21	159.44	163.95	1.052	LASDV 5
20-110	188.11	192.67	158.71	170.49	135.88	175.48	174.07	197.02	164.57	172.62	174.46	1.023	LASDV 5
20-120	194.60	206.01	164.44	171.76	137.76	177.16	175.88	202.64	169.87	185.34	183.23	0.984	LASDV 5
20-140		229.14						211.87		206.13		0.925	LASDV 5
20-160		249.01						218.80		221.93		0.891	LASDV 7
20-180		266.70						224.19		234.23		0.878	LASDV 7
20-200		282.87						254.50		270.06		0.955	LASDV 7
20-220		297.93						260.75		280.71		0.942	LASDV 7
20-240		312.17						266.57		290.02		0.929	LASDV 7
20-260		325.76						271.90		298.69		0.917	LASDV 7
20-280		338.85						276.84		306.50		0.905	LASDV 7
20-300		351.54						281.50		313.61		0.892	LASDV 7
20-320		363.90						285.92		320.16		0.880	LASDV 7
20-340		376.00						290.13		326.24		0.868	LASDV 7
30-30	126.93	114.24	115.27	141.24	96.84	133.67	145.86	128.65	106.17	95.77	89.99	1.149	LASDV 4
30-40	139.07	125.16	122.33	150.71	109.26	147.38	152.26	145.61	109.42	108.28	103.37	1.095	LASDV 4
30-50	148.59	133.73	128.80	156.84	116.93	155.60	157.66	159.99	112.93	119.04	111.61	1.077	LASDV 5
30-60	156.80	141.12	134.98	160.95	122.28	161.08	162.57	172.52	123.28	126.21	118.84	1.100	LASDV 5
30-70	165.20	148.92	141.00	163.89	126.93	164.99	166.39	182.23	133.90	132.44	131.82	1.103	LASDV 5
30-80	172.90	157.92	146.91	166.09	130.41	167.93	169.25	189.58	144.84	143.46	143.57	1.096	LASDV 5
30-90	180.13	170.52	152.76	167.80	133.12	171.01	171.48	195.29	153.54	154.19	157.18	1.084	LASDV 5

	HS20 +lane	0.9(2*HS20 +lane)	Tandem +lane	LASDV 1	LASDV 2	LASDV 3	LASDV 4	LASDV 5	LASDV 6	LASDV 7	LASDV 8	**MF**	**Controlling Vehicle**
Load Factor	1.75	1.75	1.75	1.72	1.8	1.474	1.375	1.3	1.3	1.3	1.3		
IM	1.00	1.00	1.00	1.00	1.00	1.00	1.00	1.00	1.00	1.00	1.00		
Span Length	**Design Vehicle Reactions (kips)**			**LASDV Reactions (kips)**									
30-100	187.04	185.64	158.55	169.18	135.29	173.47	173.26	200.64	160.51	166.94	168.74	1.073	LASDV 5
30-110	193.71	199.84	164.31	170.49	137.06	175.48	174.72	205.32	166.52	180.68	178.20	1.027	LASDV 5
30-120	200.20	212.52	170.04	171.76	138.54	177.16	175.93	209.21	171.82	192.13	186.22	0.984	LASDV 5
30-130		224.02						212.51		201.82		0.949	LASDV 5
30-150		244.44						217.81		217.40		0.891	LASDV 5
30-170		263.12						223.24		230.54		0.876	LASDV 7
30-190		279.98						227.92		241.32		0.862	LASDV 7
30-210		295.56						259.11		277.38		0.939	LASDV 7
30-230		310.18						264.93		287.32		0.926	LASDV 7
30-250		324.07						270.22		296.07		0.914	LASDV 7
30-270		337.40						275.13		303.92		0.901	LASDV 7
30-290		350.28						279.71		311.04		0.888	LASDV 7
30-310		362.80						284.03		317.58		0.875	LASDV 7
30-330		375.02						288.23		323.64		0.863	LASDV 7
40-40	146.30	131.67	127.93	152.37	111.96	149.16	158.38	160.47	112.13	115.86	106.87	1.097	LASDV 5
40-50	155.82	140.24	134.40	158.05	119.63	157.38	162.22	173.71	115.83	124.54	118.07	1.115	LASDV 5
40-60	164.03	147.63	140.58	162.01	124.74	162.86	164.78	183.08	127.40	131.19	130.52	1.116	LASDV 5
40-70	171.50	155.43	146.60	164.95	128.39	166.77	168.28	190.30	138.26	137.98	143.63	1.110	LASDV 5
40-80	178.50	165.38	152.51	167.15	131.31	169.71	170.91	197.32	148.04	149.74	156.27	1.105	LASDV 5
40-90	185.73	180.60	158.36	168.87	134.02	171.99	173.14	202.97	156.51	162.43	166.10	1.093	LASDV 5
40-100	192.64	194.80	164.15	170.24	136.19	173.82	174.92	207.54	163.28	175.30	173.99	1.065	LASDV 5
40-110	199.31	207.56	169.91	171.36	137.96	175.48	176.38	211.28	168.91	187.32	183.75	1.018	LASDV 5
40-120	205.80	219.03	175.64	172.29	139.44	177.16	177.60	214.39	173.66	197.98	192.02	0.979	LASDV 5
40-140		241.11						220.24		215.10		0.913	LASDV 5
40-160		260.19						224.83		228.60		0.879	LASDV 7
40-180		277.27						228.40		239.09		0.862	LASDV 7
40-200		292.95						257.28		273.55		0.934	LASDV 7
40-220		308.01						262.96		283.68		0.921	LASDV 7
40-240		322.25						268.37		292.87		0.909	LASDV 7
40-260		335.84						273.45		301.05		0.896	LASDV 7
40-280		348.93						278.18		308.46		0.884	LASDV 7

	HS20 +lane	0.9(2*HS20 +lane)	Tandem +lane	LASDV 1	LASDV 2	LASDV 3	LASDV 4	LASDV 5	LASDV 6	LASDV 7	LASDV 8	**MF**	**Controlling Vehicle**
Load Factor	1.75	1.75	1.75	1.72	1.8	1.474	1.375	1.3	1.3	1.3	1.3		
IM	1.00	1.00	1.00	1.00	1.00	1.00	1.00	1.00	1.00	1.00	1.00		
Span Length	**Design Vehicle Reactions (kips)**			**LASDV Reactions (kips)**									
40-300		361.62						282.63		315.28		0.872	LASDV 7
40-320		373.98						286.85		321.57		0.860	LASDV 7
50-50	162.40	146.16	140.00	159.05	121.25	158.45	165.89	182.72	119.34	129.09	128.40	1.125	LASDV 5
50-60	170.61	153.55	146.18	162.83	126.36	163.93	168.45	191.47	130.91	134.87	139.94	1.122	LASDV 5
50-70	178.08	161.57	152.20	165.58	130.01	167.84	170.28	198.04	141.77	145.22	153.95	1.112	LASDV 5
50-80	185.08	173.94	158.11	167.79	132.75	170.78	172.24	203.22	151.55	159.17	165.29	1.098	LASDV 5
50-90	191.77	189.67	163.96	169.50	134.88	173.06	174.28	207.83	159.15	172.86	174.35	1.084	LASDV 5
50-100	198.24	203.36	169.75	170.87	136.73	174.89	175.92	212.19	165.23	183.88	182.22	1.043	LASDV 5
50-110	204.91	216.12	175.51	171.99	138.50	176.38	177.38	215.88	170.77	194.25	189.75	0.999	LASDV 5
50-130		238.08						221.64		211.73		0.931	LASDV 5
50-150		256.87						225.86		225.98		0.880	LASDV 7
50-170		274.86						229.67		237.14		0.863	LASDV 7
50-190		291.18						232.85		246.50		0.847	LASDV 7
50-210		306.31						262.73		281.37		0.919	LASDV 7
50-230		320.57						267.46		290.23		0.905	LASDV 7
50-250		334.15						271.87		298.14		0.892	LASDV 7
50-270		347.48						276.43		305.65		0.880	LASDV 7
50-290		360.36						280.92		312.63		0.868	LASDV 7
50-310		372.88						285.20		319.11		0.856	LASDV 7
60-60	176.87	159.18	151.78	163.50	127.44	164.64	170.90	197.55	133.25	143.83	148.02	1.117	LASDV 5
60-70	184.33	169.20	157.80	166.21	131.09	168.55	172.73	203.76	144.61	155.23	161.35	1.105	LASDV 5
60-80	191.33	182.39	163.71	168.23	133.83	171.49	174.10	208.66	153.89	170.17	172.21	1.091	LASDV 5
60-90	198.02	198.24	169.56	169.93	135.96	173.77	175.16	212.62	161.49	182.71	181.58	1.073	LASDV 5
60-100	204.49	211.93	175.35	171.30	137.66	175.60	176.80	215.84	167.57	193.09	189.45	1.018	LASDV 5
60-110	210.81	224.05	181.11	172.42	139.06	177.09	178.14	219.13	172.55	202.05	195.88	0.978	LASDV 5
60-120		234.99						222.11		209.57		0.945	LASDV 5
60-140		255.18						226.97		223.52		0.889	LASDV 5
60-160		272.84						230.64		234.91		0.861	LASDV 7
60-180		288.82						233.50		244.65		0.847	LASDV 7
60-200		304.50						262.17		278.47		0.915	LASDV 7
60-220		319.16						267.11		287.94		0.902	LASDV 7

	HS20 +lane	0.9(2*HS20 +lane)	Tandem +lane	LASDV 1	LASDV 2	LASDV 3	LASDV 4	LASDV 5	LASDV 6	LASDV 7	LASDV 8	**MF**	**Controlling Vehicle**
Load Factor	1.75	1.75	1.75	1.72	1.8	1.474	1.375	1.3	1.3	1.3	1.3		
IM	1.00	1.00	1.00	1.00	1.00	1.00	1.00	1.00	1.00	1.00	1.00		
Span Length	**Design Vehicle Reactions (kips)**			**LASDV Reactions (kips)**									
60-240		333.06						271.66		296.26		0.890	LASDV 7
60-260		346.37						275.90		303.71		0.877	LASDV 7
60-280		359.22						279.92		310.46		0.864	LASDV 7
60-300		371.70						283.75		316.70		0.852	LASDV 7
60-320		384.06						287.71		322.75		0.840	LASDV 7
70-70	190.40	176.76	163.40	166.68	131.86	169.06	174.48	208.14	147.27	163.52	169.71	1.093	LASDV 5
70-80	197.40	189.95	169.31	168.71	134.60	172.00	175.85	212.76	156.12	178.27	180.81	1.078	LASDV 5
70-90	204.09	205.80	175.16	170.29	136.73	174.28	176.91	216.57	163.16	190.57	189.63	1.052	LASDV 5
70-100	210.56	219.49	180.95	171.60	138.43	176.11	177.77	219.68	169.24	200.59	196.84	1.001	LASDV 5
70-110		231.61						222.32		208.80		0.960	LASDV 5
70-130		252.58						227.03		222.45		0.899	LASDV 5
70-150		270.98						231.12		233.30		0.861	LASDV 7
70-170		287.72						234.34		242.91		0.844	LASDV 7
70-190		303.06						236.89		250.93		0.828	LASDV 7
70-210		317.40						266.25		285.29		0.899	LASDV 7
70-230		331.65						270.83		293.71		0.886	LASDV 7
70-250		345.24						275.22		301.51		0.873	LASDV 7
70-270		358.31						279.34		308.58		0.861	LASDV 7
70-290		370.96						283.25		315.04		0.849	LASDV 7
80-80	203.35	196.88	174.91	169.07	135.18	172.38	177.16	216.08	158.11	185.33	187.50	1.063	LASDV 5
80-90	210.04	212.73	180.76	170.64	137.31	174.66	178.23	219.65	164.99	196.80	196.10	1.033	LASDV 5
80-100	216.51	226.42	186.55	171.91	139.01	176.49	179.08	222.70	170.50	206.49	203.16	0.984	LASDV 5
80-120		249.48						227.39		221.53		0.911	LASDV 5
80-140		268.83						231.00		232.84		0.866	LASDV 7
80-160		285.86						234.51		241.68		0.845	LASDV 7
80-180		301.84						237.33		249.64		0.827	LASDV 7
80-200		316.64						265.62		282.65		0.893	LASDV 7
80-220		330.58						270.09		291.26		0.881	LASDV 7
80-240		343.87						274.25		299.19		0.870	LASDV 7
80-260		357.19						278.36		306.30		0.858	LASDV 7
80-280		370.04						282.37		312.95		0.846	LASDV 7

	HS20 +lane	0.9(2*HS20 +lane)	Tandem +lane	LASDV 1	LASDV 2	LASDV 3	LASDV 4	LASDV 5	LASDV 6	LASDV 7	LASDV 8	**MF**	**Controlling Vehicle**
Load Factor	1.75	1.75	1.75	1.72	1.8	1.474	1.375	1.3	1.3	1.3	1.3		
IM	1.00	1.00	1.00	1.00	1.00	1.00	1.00	1.00	1.00	1.00	1.00		
Span Length	**Design Vehicle Reactions (kips)**			**LASDV Reactions (kips)**									
80-300		382.52						286.20		319.15		0.834	LASDV 7
90-90	215.91	219.24	186.36	170.92	137.76	174.96	179.25	222.26	166.54	202.29	201.33	1.014	LASDV 5
90-100	222.38	232.93	192.15	172.18	139.46	176.78	180.10	225.10	172.05	211.46	208.21	0.966	LASDV 5
90-110		245.05						227.59		219.28		0.929	LASDV 5
90-130		266.02						231.49		231.90		0.872	LASDV 7
90-150		284.09						234.46		241.39		0.850	LASDV 7
90-170		300.28						237.36		249.12		0.830	LASDV 7
90-190		315.38						239.81		255.65		0.811	LASDV 7
90-210		329.72						269.18		288.98		0.876	LASDV 7
90-230		343.32						273.48		296.81		0.865	LASDV 7
90-250		356.35						277.51		304.10		0.853	LASDV 7
90-270		368.95						281.33		310.87		0.843	LASDV 7
100-100	228.20	239.15	197.75	172.40	139.82	177.02	180.91	227.21	173.29	215.86	212.40	0.950	LASDV 5
100-120		262.21						231.59		229.78		0.883	LASDV 5
100-140		281.56						234.87		240.53		0.854	LASDV 7
100-160		298.59						237.46		248.59		0.833	LASDV 7
100-180		314.08						239.76		255.43		0.813	LASDV 7
100-200		328.48						267.95		286.94		0.874	LASDV 7
100-220		342.42						272.39		294.73		0.861	LASDV 7
100-240		355.72						276.55		302.02		0.849	LASDV 7
100-260		368.52						280.47		308.66		0.838	LASDV 7
120-120		274.05						234.62		236.22		0.862	LASDV 7
120-140		293.40						237.73		246.06		0.839	LASDV 7
120-160		310.43						240.18		254.09		0.818	LASDV 7
120-180		325.92						242.16		260.35		0.799	LASDV 7
120-200		340.33						269.77		291.54		0.857	LASDV 7
120-220		353.95						274.02		298.62		0.844	LASDV 7
120-240		366.98						278.11		304.99		0.831	LASDV 7
140-140		304.74						239.92		250.76		0.823	LASDV 7
140-160		321.77						242.23		258.14		0.802	LASDV 7
140-180		337.26						244.14		264.28		0.784	LASDV 7

	HS20 +lane	0.9(2*HS20 +lane)	Tandem +lane	LASDV 1	LASDV 2	LASDV 3	LASDV 4	LASDV 5	LASDV 6	LASDV 7	LASDV 8	**MF**	**Controlling Vehicle**
Load Factor	1.75	1.75	1.75	1.72	1.8	1.474	1.375	1.3	1.3	1.3	1.3		
IM	1.00	1.00	1.00	1.00	1.00	1.00	1.00	1.00	1.00	1.00	1.00		
Span Length	**Design Vehicle Reactions (kips)**			**LASDV Reactions (kips)**									
140-200		351.67						271.69		295.30		0.840	LASDV 7
140-220		365.29						275.61		302.00		0.827	LASDV 7
160-160		332.80						243.89		261.67		0.786	LASDV 7
160-180		348.28						245.68		267.40		0.768	LASDV 7
160-200		362.69						273.20		298.24		0.822	LASDV 7
170-170		346.13						245.53		266.16		0.769	LASDV 7
170-190		361.03						247.11		271.27		0.751	LASDV 7
180-180		359.10						246.98		270.15		0.752	LASDV 7
180-200		373.51						274.40		300.73		0.805	LASDV 7
190-190		371.77						248.28		273.72		0.736	LASDV 7
200-200		384.17						301.45		328.93		0.856	LASDV 7
200-250		417.16						295.15		343.90		0.824	LASDV 7
200-300		447.55						318.98		356.41		0.796	LASDV 7
250-250		443.42						318.90		354.15		0.799	LASDV 7
250-300		473.81						327.16		366.21		0.773	LASDV 7
250-350		502.72						334.97		377.01		0.750	LASDV 7

Table 1.4.2-4: Factored Reactions for Simply Supported Spans With Impact (kips)

	HS20 +lane	0.9(2*HS20 +lane)	Tandem +lane	LASDV 1	LASDV 2	LASDV 3	LASDV 4	LASDV 5	LASDV 6	LASDV 7	LASDV 8	**MF**	**Controlling Vehicle**
Load Factor	1.75	1.75	1.75	1.72	1.8	1.474	1.375	1.3	1.3	1.3	1.3		
IM	1.33TL +1.0LL	1.33TL+ 1.0LL	1.33TL+ 1.0LL	1.33	1.33	1.33	1.33	1.33	1.33	1.33	1.33		
Span Length	**Design Vehicle Reactions (kips)**			**LASDV Reactions (kips)**									
20-20	124.81	112.33	127.14	158.25	95.04	142.52	160.70	137.16	125.35	92.79	93.08	1.264	LASDV 4
20-30	147.79	133.01	136.62	183.89	121.62	173.06	177.71	156.89	134.00	119.59	111.91	1.244	LASDV 1
20-40	162.08	145.87	144.16	197.56	138.61	191.28	194.04	176.22	141.78	135.73	129.89	1.219	LASDV 1
20-50	175.50	157.95	150.92	205.77	151.59	202.22	204.70	192.65	146.45	148.18	143.62	1.172	LASDV 1
20-60	186.31	167.68	157.30	211.24	160.24	211.09	211.81	210.40	157.05	160.84	152.77	1.137	LASDV 4
20-70	195.64	176.07	163.45	215.15	166.42	218.10	216.88	224.49	172.53	171.29	167.28	1.147	LASDV 5
20-80	204.03	185.30	169.46	219.14	171.05	223.35	220.69	236.70	187.16	182.23	184.21	1.160	LASDV 5
20-90	211.80	199.56	175.39	222.24	174.66	227.44	225.10	246.19	200.08	195.63	200.96	1.162	LASDV 5
20-100	219.14	217.33	181.25	224.72	177.73	230.71	228.63	253.85	210.42	212.06	218.05	1.158	LASDV 5
20-110	226.16	234.62	187.06	226.75	180.73	233.39	231.52	262.04	218.88	229.59	232.04	1.117	LASDV 5
20-120	232.95	250.71	192.84	228.45	183.22	235.62	233.92	269.51	225.92	246.50	243.69	1.075	LASDV 5
20-130	239.55	265.09	198.58	229.88	185.33	262.92	235.96	276.11	231.88	261.34	253.55	1.042	LASDV 5
20-140	246.01	278.15	204.31	231.10	187.14	268.72	237.70	281.78	237.00	274.15	262.00	1.013	LASDV 5
20-150	252.35	290.13	210.02	232.17	188.71	273.74	239.21	286.70	241.43	285.36	269.55	0.988	LASDV 5
20-160		301.24						291.00		295.17		0.980	LASDV 7
20-180		321.45						298.17		311.52		0.969	LASDV 7
20-200		339.63						329.90		350.60		1.032	LASDV 7
20-220		356.33						337.36		363.91		1.021	LASDV 7
20-240		371.94						344.25		375.43		1.009	LASDV 7
20-260		386.69						350.47		386.10		0.998	LASDV 7
20-280		400.77						356.18		395.63		0.987	LASDV 7
20-300		414.33						361.52		404.23		0.976	LASDV 7
20-320		427.44						366.55		412.08		0.964	LASDV 7
20-340		440.20						371.29		419.32		0.953	LASDV 7
30-40	172.02	154.82	149.76	200.44	145.32	196.01	202.50	193.67	145.52	144.01	137.48	1.177	LASDV 4
30-50	182.84	164.55	156.52	208.59	155.51	206.95	209.69	212.79	150.19	158.32	148.44	1.164	LASDV 5
30-60	191.91	172.72	162.90	214.06	162.63	214.24	216.22	229.46	163.97	167.86	158.06	1.196	LASDV 5

	HS20 +lane	0.9(2*HS20 +lane)	Tandem +lane	LASDV 1	LASDV 2	LASDV 3	LASDV 4	LASDV 5	LASDV 6	LASDV 7	LASDV 8	**MF**	**Controlling Vehicle**
Load Factor	1.75	1.75	1.75	1.72	1.8	1.474	1.375	1.3	1.3	1.3	1.3		
IM	1.33TL +1.0LL	1.33TL+ 1.0LL	1.33TL+ 1.0LL	1.33	1.33	1.33	1.33	1.33	1.33	1.33	1.33		
Span Length	**Design Vehicle Reactions (kips)**			**LASDV Reactions (kips)**									
30-70	201.24	181.43	169.05	217.97	168.81	219.44	221.30	242.37	178.09	176.15	175.33	1.204	LASDV 5
30-80	209.63	191.74	175.06	220.90	173.45	223.35	225.11	252.14	192.64	190.80	190.95	1.203	LASDV 5
30-90	217.40	206.83	180.99	223.18	177.05	227.44	228.07	259.74	204.21	205.08	209.05	1.195	LASDV 5
30-100	224.74	225.28	186.85	225.01	179.93	230.71	230.44	266.85	213.47	222.03	224.42	1.185	LASDV 5
30-110	231.76	242.51	192.66	226.75	182.29	233.39	232.38	273.07	221.47	240.30	237.00	1.126	LASDV 5
30-120	238.55	257.70	198.44	228.45	184.26	235.62	233.99	278.25	228.52	255.53	247.68	1.080	LASDV 5
30-130	245.15	271.34	204.18	229.88	185.92	265.86	236.03	282.64	234.48	268.41	256.74	1.042	LASDV 5
30-140	251.61	283.74	209.91	231.10	187.35	271.66	237.77	286.39	239.59	279.46	264.84	1.009	LASDV 5
30-150	257.95	295.17	206.87	232.17	188.71	276.68	239.28	289.69	244.02	289.14	272.24	0.981	LASDV 5
30-170		316.68						296.90		306.61		0.968	LASDV 7
30-190		335.79						303.13		320.95		0.956	LASDV 7
30-210		353.18						335.61		359.91		1.019	LASDV 7
30-230		369.29						342.48		372.26		1.008	LASDV 7
30-250		384.45						348.67		383.05		0.996	LASDV 7
30-270		398.85						354.33		392.63		0.984	LASDV 7
30-290		412.65						359.57		401.24		0.972	LASDV 7
30-310		425.97						364.47		409.08		0.960	LASDV 7
30-330		438.90						369.20		416.28		0.948	LASDV 7
40-40	179.80	161.82	155.36	202.65	148.91	198.38	210.65	213.43	149.13	154.10	142.14	1.187	LASDV 5
40-50	190.61	171.55	162.12	210.21	159.11	209.31	215.75	231.03	154.05	165.64	157.03	1.212	LASDV 5
40-60	199.68	179.72	168.50	215.47	165.90	216.60	219.15	243.50	169.44	174.48	173.60	1.219	LASDV 5
40-70	207.77	188.43	174.65	219.38	170.76	221.81	223.82	253.09	183.89	183.52	191.02	1.218	LASDV 5
40-80	215.23	199.99	180.66	222.31	174.64	225.71	227.32	262.43	196.89	199.16	207.84	1.219	LASDV 5
40-90	223.00	218.58	186.59	224.59	178.25	228.75	230.28	269.94	208.15	216.03	220.92	1.211	LASDV 5
40-100	230.34	235.79	192.45	226.42	181.13	231.18	232.65	276.02	217.16	233.15	231.41	1.171	LASDV 5
40-110	237.36	251.10	198.26	227.91	183.49	233.39	234.59	281.00	224.65	249.13	244.39	1.119	LASDV 5
40-120	244.15	264.70	204.04	229.15	185.46	235.62	236.20	285.14	230.97	263.31	255.39	1.077	LASDV 5
40-130	250.75	278.33	209.78	230.20	187.12	267.94	237.57	289.17	236.31	275.31	265.49	1.039	LASDV 5
40-140	257.21	290.74	215.51	231.10	188.54	273.13	238.74	292.92	240.89	286.09	274.15	1.008	LASDV 5

	HS20 +lane	0.9(2*HS20 +lane)	Tandem +lane	LASDV 1	LASDV 2	LASDV 3	LASDV 4	LASDV 5	LASDV 6	LASDV 7	LASDV 8	**MF**	**Controlling Vehicle**
Load Factor	1.75	1.75	1.75	1.72	1.8	1.474	1.375	1.3	1.3	1.3	1.3		
IM	1.33TL +1.0LL	1.33TL+ 1.0LL	1.33TL+ 1.0LL	1.33	1.33	1.33	1.33	1.33	1.33	1.33	1.33		
Span Length	**Design Vehicle Reactions (kips)**			**LASDV Reactions (kips)**									
40-150	263.55	302.16	221.22	232.17	189.78	278.15	239.76	296.18	245.32	295.66	281.65	0.980	LASDV 5
40-160		312.79						299.03		304.03		0.972	LASDV 7
40-180		332.18						303.78		317.99		0.957	LASDV 7
40-200		349.71						333.61		355.24		1.016	LASDV 7
40-220		366.41						340.30		367.85		1.004	LASDV 7
40-240		382.02						346.64		379.22		0.993	LASDV 7
40-260		396.77						352.54		389.24		0.981	LASDV 7
40-280		410.85						357.97		398.25		0.969	LASDV 7
40-300		424.41						363.03		406.45		0.958	LASDV 7
40-320		437.52						367.78		413.96		0.946	LASDV 7
50-50	197.51	177.76	167.72	211.53	161.26	210.73	220.64	243.01	158.72	171.69	170.77	1.230	LASDV 5
50-60	206.59	185.93	174.10	216.57	168.06	218.02	224.04	254.66	174.11	179.38	186.12	1.233	LASDV 5
50-70	214.67	194.93	180.25	220.23	172.92	223.23	226.47	263.39	188.56	193.14	204.75	1.227	LASDV 5
50-80	222.13	209.72	186.26	223.16	176.56	227.13	229.08	270.29	201.56	211.70	219.84	1.217	LASDV 5
50-90	229.18	228.98	192.19	225.44	179.39	230.17	231.79	276.41	211.67	229.91	231.88	1.206	LASDV 5
50-100	235.94	245.53	198.05	227.26	181.85	232.60	233.97	282.22	219.76	244.57	242.35	1.149	LASDV 5
50-110	242.96	260.83	203.86	228.75	184.21	234.59	235.91	287.12	227.13	258.36	252.37	1.101	LASDV 5
50-120	249.75	274.43	209.64	230.00	186.17	264.49	237.53	291.27	233.27	270.83	263.14	1.061	LASDV 5
50-130	256.35	286.71	215.38	231.05	187.84	270.39	238.89	294.78	238.47	281.60	272.42	1.028	LASDV 5
50-140	262.81	297.96	221.11	231.95	189.26	275.58	240.07	297.78	243.05	291.64	280.39	0.999	LASDV 5
50-150	269.15	308.38	226.82	232.73	190.50	280.08	241.08	300.39	247.02	300.56	287.30	0.975	LASDV 7
50-170		328.97						305.46		315.40		0.959	LASDV 7
50-190		347.35						309.70		327.84		0.944	LASDV 7
50-210		364.15						340.42		365.22		1.003	LASDV 7
50-230		379.78						345.86		376.14		0.990	LASDV 7
50-250		394.53						350.86		385.80		0.978	LASDV 7
50-270		408.93						356.07		394.93		0.966	LASDV 7
50-290		422.73						361.19		403.36		0.954	LASDV 7
50-310		436.05						366.02		411.11		0.943	LASDV 7

	HS20 +lane	0.9(2*HS20 +lane)	Tandem +lane	LASDV 1	LASDV 2	LASDV 3	LASDV 4	LASDV 5	LASDV 6	LASDV 7	LASDV 8	**MF**	**Controlling Vehicle**
Load Factor	1.75	1.75	1.75	1.72	1.8	1.474	1.375	1.3	1.3	1.3	1.3		
IM	1.33TL +1.0LL	1.33TL+ 1.0LL	1.33TL+ 1.0LL	1.33	1.33	1.33	1.33	1.33	1.33	1.33	1.33		
Span Length	**Design Vehicle Reactions (kips)**			**LASDV Reactions (kips)**									
60-60	213.06	191.75	179.70	217.46	169.50	218.97	227.30	262.74	177.22	191.29	196.87	1.233	LASDV 5
60-70	221.14	203.41	185.85	221.05	174.35	224.17	229.73	271.00	192.33	206.46	214.59	1.225	LASDV 5
60-80	228.60	219.29	191.86	223.75	177.99	228.08	231.55	277.51	204.67	226.33	229.04	1.214	LASDV 5
60-90	235.65	238.71	197.79	226.00	180.83	231.12	232.97	282.79	214.78	243.00	241.50	1.185	LASDV 5
60-100	242.41	255.26	203.65	227.83	183.09	233.55	235.14	287.07	222.87	256.80	251.96	1.125	LASDV 5
60-110	248.96	269.71	209.46	229.32	184.95	235.53	236.92	291.45	229.49	268.72	260.52	1.081	LASDV 5
60-120	255.35	282.60	215.24	230.56	186.65	266.45	238.41	295.41	235.00	278.73	268.69	1.045	LASDV 5
60-130	261.95	294.88	220.98	231.61	188.32	272.35	239.78	298.86	240.20	288.41	277.81	1.013	LASDV 5
60-140	268.41	306.12	226.71	232.51	189.74	277.40	240.95	301.86	244.65	297.28	285.62	0.986	LASDV 5
60-160		326.29						306.75		312.43		0.958	LASDV 7
60-180		344.21						310.55		325.39		0.945	LASDV 7
60-200		361.74						340.11		361.79		1.000	LASDV 7
60-220		377.91						345.82		373.52		0.988	LASDV 7
60-240		393.07						351.01		383.73		0.976	LASDV 7
60-260		407.45						355.80		392.78		0.964	LASDV 7
60-280		421.21						360.28		400.90		0.952	LASDV 7
60-300		434.49						364.52		408.34		0.940	LASDV 7
60-320		447.60						368.92		415.53		0.928	LASDV 7
70-70	227.36	211.81	191.45	221.68	175.38	224.85	232.05	276.83	195.87	217.48	225.72	1.218	LASDV 5
70-80	234.82	227.68	197.46	224.38	179.02	228.76	233.88	282.97	207.63	237.10	240.47	1.205	LASDV 5
70-90	241.87	247.10	203.39	226.48	181.85	231.79	235.30	288.04	217.00	253.45	252.21	1.166	LASDV 5
70-100	248.63	263.65	209.25	228.23	184.12	234.22	236.43	292.17	225.09	266.79	261.79	1.108	LASDV 5
70-110	255.18	278.11	215.06	229.72	185.97	262.72	237.76	295.68	231.71	277.70	270.36	1.063	LASDV 5
70-120	261.57	290.99	220.84	230.97	187.52	268.97	239.25	298.60	237.22	287.46	277.49	1.026	LASDV 5
70-130	267.84	302.67	226.58	232.02	188.83	274.26	240.50	301.96	241.89	295.86	283.53	0.998	LASDV 5
70-150		323.82						307.39		310.29		0.958	LASDV 7
70-170		342.76						311.68		323.07		0.943	LASDV 7
70-190		359.83						315.07		333.74		0.927	LASDV 7
70-210		375.57						345.11		370.42		0.986	LASDV 7

	HS20 +lane	0.9(2*HS20 +lane)	Tandem +lane	LASDV 1	LASDV 2	LASDV 3	LASDV 4	LASDV 5	LASDV 6	LASDV 7	LASDV 8	**MF**	**Controlling Vehicle**
Load Factor	1.75	1.75	1.75	1.72	1.8	1.474	1.375	1.3	1.3	1.3	1.3		
IM	1.33TL +1.0LL	1.33TL+ 1.0LL	1.33TL+ 1.0LL	1.33	1.33	1.33	1.33	1.33	1.33	1.33	1.33		
Span Length	**Design Vehicle Reactions (kips)**			**LASDV Reactions (kips)**									
70-230		391.20						350.33		380.77		0.973	LASDV 7
70-250		405.95						355.31		390.28		0.961	LASDV 7
70-270		420.00						359.94		398.83		0.950	LASDV 7
70-290		433.50						364.29		406.57		0.938	LASDV 7
80-80	240.89	235.23	203.06	224.86	179.79	229.26	235.62	287.39	210.29	246.49	249.37	1.193	LASDV 5
80-90	247.94	254.66	208.99	226.96	182.62	232.30	237.04	292.14	219.44	261.74	260.82	1.147	LASDV 5
80-100	254.70	271.20	214.85	228.63	184.89	234.73	238.17	296.19	226.76	274.63	270.21	1.092	LASDV 5
80-110	261.24	285.66	220.66	230.02	186.74	264.61	239.10	299.51	233.38	285.54	277.89	1.048	LASDV 5
80-120	267.63	298.54	226.44	231.27	188.29	270.87	239.88	302.43	238.89	294.64	284.86	1.013	LASDV 5
80-130	273.90	310.22	232.18	232.32	189.60	239.78	241.13	304.90	243.56	302.47	290.90	0.983	LASDV 5
80-140		320.95						307.23		309.67		0.965	LASDV 7
80-160		340.28						311.90		321.43		0.945	LASDV 7
80-180		358.20						315.65		332.01		0.927	LASDV 7
80-200		374.56						344.69		367.35		0.981	LASDV 7
80-220		389.77						349.78		377.94		0.970	LASDV 7
80-240		404.13						354.45		387.62		0.959	LASDV 7
80-260		418.51						359.06		396.22		0.947	LASDV 7
80-280		432.27						363.54		404.21		0.935	LASDV 7
80-300		445.54						367.77		411.60		0.924	LASDV 7
90-90	253.90	261.65	214.59	227.32	183.22	232.69	238.40	295.61	221.50	269.05	267.77	1.130	LASDV 5
90-100	260.66	278.20	220.45	229.00	185.49	235.12	239.53	299.38	228.82	281.25	276.91	1.076	LASDV 5
90-110	267.20	292.65	226.26	230.38	187.34	266.24	240.46	302.70	234.81	291.64	284.58	1.034	LASDV 5
90-120	273.60	305.54	232.04	231.52	188.89	272.33	241.23	305.46	240.19	300.73	290.98	1.000	LASDV 5
90-130		317.22						307.88		308.43		0.972	LASDV 7
90-150		337.92						311.84		321.05		0.950	LASDV 7
90-170		356.12						315.68		331.33		0.930	LASDV 7
90-190		372.89						318.95		340.02		0.912	LASDV 7
90-210		388.63						349.00		375.34		0.966	LASDV 7
90-230		403.39						353.86		384.89		0.954	LASDV 7

	HS20 +lane	0.9(2*HS20 +lane)	Tandem +lane	LASDV 1	LASDV 2	LASDV 3	LASDV 4	LASDV 5	LASDV 6	LASDV 7	LASDV 8	**MF**	**Controlling Vehicle**
Load Factor	1.75	1.75	1.75	1.72	1.8	1.474	1.375	1.3	1.3	1.3	1.3		
IM	1.33TL +1.0LL	1.33TL+ 1.0LL	1.33TL+ 1.0LL	1.33	1.33	1.33	1.33	1.33	1.33	1.33	1.33		
Span Length	**Design Vehicle Reactions (kips)**			**LASDV Reactions (kips)**									
90-250		417.40						358.36		393.73		0.943	LASDV 7
90-270		430.82						362.59		401.87		0.933	LASDV 7
100-100	266.55	284.80	226.05	229.30	185.97	235.44	240.62	302.19	230.48	287.10	282.49	1.061	LASDV 5
100-110	273.09	299.26	231.86	230.67	187.82	237.43	241.54	305.25	236.46	297.07	289.97	1.020	LASDV 5
100-120	279.48	312.14	237.64	231.82	189.37	239.08	242.32	308.01	241.46	305.61	296.34	0.987	LASDV 5
100-140		334.55						312.38		319.90		0.956	LASDV 7
100-160		353.88						315.82		330.62		0.934	LASDV 7
100-180		371.15						318.88		339.73		0.915	LASDV 7
100-200		386.99						347.79		373.05		0.964	LASDV 7
100-220		402.20						352.84		382.55		0.951	LASDV 7
100-240		416.56						357.51		391.39		0.940	LASDV 7
100-260		430.26						361.87		399.37		0.928	LASDV 7
110-110	278.93	305.58	237.46	230.91	188.21	237.69	242.43	307.57	237.82	301.87	294.53	1.007	LASDV 5
110-120	285.32	318.46	243.24	232.06	189.76	239.34	243.21	310.10	242.81	310.17	300.77	0.974	LASDV 7
110-130	291.59	330.14	248.98	233.03	191.06	240.74	243.86	312.44	247.03	317.32	306.14	0.961	LASDV 7
120-120	291.12	324.57	248.84	232.26	190.08	239.56	243.95	312.05	243.93	314.17	304.57	0.968	LASDV 7
120-140		346.98						316.18		327.26		0.943	LASDV 7
120-160		366.31						319.44		337.93		0.923	LASDV 7
120-180		383.58						322.07		346.27		0.903	LASDV 7
120-200		399.41						350.22		379.17		0.949	LASDV 7
120-220		414.20						355.00		387.73		0.936	LASDV 7
120-240		428.20						359.58		395.33		0.923	LASDV 7
140-140		358.74						319.09		333.51		0.930	LASDV 7
140-160		378.06						322.17		343.32		0.908	LASDV 7
140-180		395.33						324.70		351.50		0.889	LASDV 7
140-200		411.17						352.77		384.17		0.934	LASDV 7
140-220		425.95						357.12		392.22		0.921	LASDV 7
160-160		389.40						324.38		348.01		0.894	LASDV 7
160-180		406.67						326.75		355.64		0.875	LASDV 7

	HS20 +lane	0.9(2*HS20 +lane)	Tandem +lane	LASDV 1	LASDV 2	LASDV 3	LASDV 4	LASDV 5	LASDV 6	LASDV 7	LASDV 8	**MF**	**Controlling Vehicle**
Load Factor	1.75	1.75	1.75	1.72	1.8	1.474	1.375	1.3	1.3	1.3	1.3		
IM	1.33TL +1.0LL	1.33TL+ 1.0LL	1.33TL+ 1.0LL	1.33	1.33	1.33	1.33	1.33	1.33	1.33	1.33		
Span Length	**Design Vehicle Reactions (kips)**			**LASDV Reactions (kips)**									
160-200		422.50						354.78		388.08		0.919	LASDV 7
170-170		403.80						326.55		353.99		0.877	LASDV 7
170-190		420.30						328.66		360.79		0.858	LASDV 7

Table 1.4.2-5: Service Reactions for Continuous Spans Without Impact (kips)

	HS20 +lane	0.9(2*HS20 +lane)	Tandem +lane	LASDV 1	LASDV 2	LASDV 3	LASDV 4	LASDV 5	LASDV 6	LASDV 7	LASDV 8	**MF**	**Controlling Vehicle**
Load Factor	1	1	1	1	1	1	1	1	1	1	1		
IM	*1.00*	*1.00*	*1.00*	*1.00*	*1.00*	*1.00*	*1.00*	*1.00*	*1.00*	*1.00*	*1.00*		
Span Length	**Design Vehicle Reactions (kips)**			**LASDV Reactions (kips)**									
20-20	69.33	62.40	65.17	88.52	50.45	87.36	106.35	96.10	86.56	68.17	65.62	1.534	LASDV 4
20-30	82.09	73.89	71.51	98.35	63.36	106.44	122.21	111.40	94.02	87.95	81.93	1.489	LASDV 4
20-40	95.58	86.02	80.31	108.44	75.72	122.63	137.31	132.72	102.47	104.44	99.85	1.437	LASDV 4
20-50	109.49	98.54	90.63	118.40	86.56	137.23	151.74	157.52	111.21	120.37	115.40	1.439	LASDV 5
20-60	124.03	111.62	102.15	128.35	96.52	151.02	165.73	187.76	120.15	139.18	129.51	1.514	LASDV 5
20-70	139.30	125.37	114.69	138.36	105.97	164.38	179.51	215.72	142.15	156.41	149.97	1.549	LASDV 5
20-80	155.35	139.81	128.19	148.42	115.11	177.52	193.21	242.01	166.38	172.61	176.60	1.558	LASDV 5
20-90	172.19	155.89	142.59	158.53	124.06	190.53	206.87	266.98	169.54	195.79	208.22	1.550	LASDV 5
20-100	189.84	181.05	157.88	168.68	132.89	203.46	220.52	290.92	216.22	225.28	240.27	1.532	LASDV 5
20-110	208.28	210.89	174.01	178.86	141.64	216.35	234.15	314.11	239.17	262.12	270.54	1.489	LASDV 5
20-120	227.53	241.18	190.98	189.06	150.33	229.20	247.79	336.74	261.19	300.12	299.35	1.396	LASDV 5
20-130	247.58	271.26	208.79	199.29	158.97	242.02	261.42	358.95	282.48	336.45	329.79	1.323	LASDV 5
20-140	268.44	301.28	227.42	209.54	167.59	254.84	275.06	380.84	303.20	371.35	360.66	1.264	LASDV 5
20-150	290.10	331.39	246.87	219.81	176.18	267.64	288.71	402.47	323.47	405.05	390.52	1.222	LASDV 7
20-160	312.57	361.68	267.14	230.09	184.75	280.44	302.37	423.89	343.37	437.69	419.56	1.210	LASDV 7
20-180		423.20						466.27		500.46		1.183	LASDV 7
20-200		486.31						578.04		630.56		1.297	LASDV 7
20-220		551.38						632.10		701.42		1.272	LASDV 7
20-240		618.63						686.93		771.86		1.248	LASDV 7
20-260		688.21						742.57		842.23		1.224	LASDV 7
20-280		760.25						799.07		912.75		1.201	LASDV 7
20-300		834.83						856.46		983.58		1.178	LASDV 7
20-320		912.02						914.75		1054.87		1.157	LASDV 7
30-30	86.93	78.24	73.61	98.98	68.46	110.96	125.19	119.83	93.77	94.77	90.39	1.440	LASDV 4
30-40	94.74	85.27	78.87	102.91	74.58	118.53	131.63	135.94	96.84	103.49	99.36	1.435	LASDV 5
30-50	103.84	93.45	85.77	107.95	80.64	126.51	139.13	156.71	101.14	115.69	108.07	1.509	LASDV 5
30-60	113.74	102.37	93.78	113.47	86.53	134.50	147.05	175.61	113.71	127.14	120.45	1.544	LASDV 5
30-70	124.36	111.92	102.67	119.31	92.27	142.48	155.19	193.22	130.83	137.91	139.67	1.554	LASDV 5
30-80	135.62	122.50	112.32	125.36	97.91	150.50	163.50	209.92	149.60	152.63	162.18	1.548	LASDV 5

	HS20 +lane	0.9(2*HS20 +lane)	Tandem +lane	LASDV 1	LASDV 2	LASDV 3	LASDV 4	LASDV 5	LASDV 6	LASDV 7	LASDV 8	**MF**	**Controlling Vehicle**
Load Factor	1	1	1	1	1	1	1	1	1	1	1		
IM	*1.00*	*1.00*	*1.00*	*1.00*	*1.00*	*1.00*	*1.00*	*1.00*	*1.00*	*1.00*	*1.00*		
Span Length	**Design Vehicle Reactions (kips)**			**LASDV Reactions (kips)**									
30-90	147.52	138.86	122.66	131.57	103.52	158.59	171.94	225.94	166.90	172.94	185.12	1.532	LASDV 5
30-100	160.02	160.41	133.65	137.89	109.10	166.71	180.48	241.41	183.03	199.67	206.59	1.505	LASDV 5
30-110	173.10	182.15	145.25	144.31	114.67	174.88	189.10	256.45	198.31	226.88	226.84	1.408	LASDV 5
30-120	186.77	203.56	157.44	150.80	120.24	183.09	197.79	271.16	212.92	252.62	247.81	1.332	LASDV 5
30-130	201.00	224.76	170.22	157.36	125.81	191.33	206.54	285.62	227.02	277.14	269.35	1.271	LASDV 5
30-140	215.80	245.87	183.57	163.96	131.38	199.61	215.34	299.91	240.73	300.61	290.04	1.223	LASDV 7
30-150	231.15	266.98	197.49	170.60	136.95	207.90	224.18	314.05	254.14	323.21	310.05	1.211	LASDV 7
30-170		309.57						342.01		366.34		1.183	LASDV 7
30-190		353.01						369.69		407.34		1.154	LASDV 7
30-210		397.62						454.85		504.49		1.269	LASDV 7
30-230		443.59						491.51		552.18		1.245	LASDV 7
30-250		491.07						528.75		599.69		1.221	LASDV 7
30-270		540.14						566.57		647.22		1.198	LASDV 7
30-290		590.88						605.00		694.90		1.176	LASDV 7
30-310		643.33						644.05		742.85		1.155	LASDV 7
40-40	98.69	88.82	81.77	102.82	76.48	120.04	132.42	148.55	96.42	109.78	102.57	1.505	LASDV 5
40-50	104.77	94.29	86.59	104.85	79.58	123.86	135.72	161.41	102.07	116.77	109.47	1.541	LASDV 5
40-60	112.01	100.81	92.61	107.85	83.08	128.50	140.14	173.68	115.34	123.83	124.44	1.551	LASDV 5
40-70	120.07	108.12	99.49	111.39	86.75	133.52	145.17	185.51	130.45	133.38	142.17	1.545	LASDV 5
40-80	128.76	119.38	107.08	115.27	90.52	138.80	150.56	196.97	144.15	149.30	160.24	1.530	LASDV 5
40-90	138.04	136.83	115.27	119.39	94.33	144.24	156.21	208.14	156.80	170.63	176.98	1.508	LASDV 5
40-100	147.84	154.22	124.02	123.70	98.19	149.82	162.05	219.08	168.64	192.29	192.69	1.421	LASDV 5
40-110	158.15	171.19	133.28	128.14	102.09	155.52	168.04	229.83	179.87	212.62	208.86	1.343	LASDV 5
40-120	168.95	187.91	143.02	132.70	106.03	161.30	174.15	240.40	190.61	231.87	225.56	1.279	LASDV 5
40-130	180.20	204.49	153.23	137.34	110.00	167.09	180.36	250.85	200.97	250.16	241.54	1.227	LASDV 5
40-140	191.91	221.00	163.89	142.06	114.00	173.09	186.65	261.20	211.06	267.68	256.94	1.211	LASDV 7
40-160	115.91	254.09						281.72		300.88		1.184	LASDV 7
40-180	135.81	287.64						302.07		332.19		1.155	LASDV 7
40-200	157.33	321.96						367.30		407.11		1.264	LASDV 7
40-220	180.46	357.23						394.74		443.33		1.241	LASDV 7
40-240	205.20	393.60						422.65		479.33		1.218	LASDV 7

	HS20 +lane	0.9(2*HS20 +lane)	Tandem +lane	LASDV 1	LASDV 2	LASDV 3	LASDV 4	LASDV 5	LASDV 6	LASDV 7	LASDV 8	**MF**	**Controlling Vehicle**
Load Factor	1	1	1	1	1	1	1	1	1	1	1		
IM	*1.00*	*1.00*	*1.00*	*1.00*	*1.00*	*1.00*	*1.00*	*1.00*	*1.00*	*1.00*	*1.00*		
Span Length	**Design Vehicle Reactions (kips)**			**LASDV Reactions (kips)**									
40-260	231.55	431.13						451.04		515.28		1.195	LASDV 7
40-280	259.51	469.90						479.91		551.32		1.173	LASDV 7
40-300	289.07	509.95						509.26		587.52		1.152	LASDV 7
40-320	320.23	551.30						539.11		623.95		1.132	LASDV 7
50-50	108.51	97.66	89.85	104.65	80.42	124.43	135.92	168.01	109.84	119.87	119.45	1.548	LASDV 5
50-60	113.83	102.44	94.44	105.86	82.23	126.66	137.87	175.67	121.92	124.97	133.68	1.543	LASDV 5
50-70	120.12	109.90	99.96	107.84	84.48	129.66	140.77	183.58	132.94	137.94	148.44	1.528	LASDV 5
50-80	127.13	124.69	106.19	110.31	86.99	133.12	144.24	191.57	143.14	155.84	162.01	1.507	LASDV 5
50-90	134.72	139.26	113.00	113.08	89.64	136.86	148.08	199.58	152.68	173.96	174.66	1.433	LASDV 5
50-100	142.81	153.45	120.32	116.09	92.40	140.82	152.20	207.58	161.71	190.81	187.65	1.353	LASDV 5
50-110	151.38	167.36	128.11	119.29	95.24	144.94	156.52	215.56	170.32	206.65	201.27	1.288	LASDV 5
50-120	160.38	181.10	136.33	122.62	98.16	149.20	161.01	223.52	178.62	221.69	214.28	1.234	LASDV 5
50-130	169.78	194.76	144.95	126.07	101.13	153.57	165.63	231.45	186.65	236.05	226.77	1.212	LASDV 7
50-150	101.28	222.07						247.25		263.12		1.185	LASDV 7
50-170		249.62						263.01		288.50		1.156	LASDV 7
50-190		277.70						278.78		312.65		1.126	LASDV 7
50-210	154.64	306.50						337.59		378.95		1.236	LASDV 7
50-230		336.14						359.79		407.97		1.214	LASDV 7
50-250		366.70						382.42		436.91		1.191	LASDV 7
50-270		398.24						387.47		465.89		1.170	LASDV 7
50-290		430.80						428.95		494.98		1.149	LASDV 7
50-310		464.40						452.83		524.26		1.129	LASDV 7
60-60	117.54	106.72	97.89	105.65	82.65	126.88	137.87	179.47	128.98	133.96	144.56	1.527	LASDV 5
60-70	122.45	119.36	102.35	106.45	83.80	128.31	139.14	184.40	136.78	149.13	155.29	1.506	LASDV 5
60-80	128.18	131.63	107.56	107.86	85.36	130.41	141.18	189.82	144.29	164.52	165.46	1.442	LASDV 5
60-90	134.54	143.62	113.36	109.67	87.17	132.92	143.72	195.52	151.51	178.77	176.12	1.361	LASDV 5
60-100	141.41	155.43	119.66	111.76	89.14	135.72	146.60	201.42	158.47	192.13	187.29	1.296	LASDV 5
60-110	148.74	167.12	126.41	114.07	91.24	138.73	149.74	207.44	165.21	204.75	198.06	1.241	LASDV 5
60-120	156.49	178.75	133.55	116.55	93.43	141.92	153.09	213.54	171.75	216.78	208.42	1.213	LASDV 7
60-140		201.98						225.90		239.47		1.186	LASDV 7
60-160		225.43						238.39		260.72		1.157	LASDV 7

	HS20 +lane	0.9(2*HS20 +lane)	Tandem +lane	LASDV 1	LASDV 2	LASDV 3	LASDV 4	LASDV 5	LASDV 6	LASDV 7	LASDV 8	**MF**	**Controlling Vehicle**
Load Factor	1	1	1	1	1	1	1	1	1	1	1		
IM	*1.00*	*1.00*	*1.00*	*1.00*	*1.00*	*1.00*	*1.00*	*1.00*	*1.00*	*1.00*	*1.00*		
Span Length	**Design Vehicle Reactions (kips)**			**LASDV Reactions (kips)**									
60-180		249.28						251.00		280.89		1.127	LASDV 7
60-200		273.69						300.36		336.92		1.231	LASDV 7
60-220		298.79						318.65		361.21		1.209	LASDV 7
60-240		324.65						337.35		385.40		1.187	LASDV 7
60-260		351.32						356.45		409.61		1.166	LASDV 7
60-280		378.85						375.93		433.92		1.145	LASDV 7
60-300		407.25						395.79		458.37		1.126	LASDV 7
60-320		436.55						416.02		483.01		1.106	LASDV 7
70-70	126.17	129.26	105.92	106.26	84.02	128.38	139.06	186.76	141.33	161.36	162.41	1.445	LASDV 5
70-80	130.84	139.17	110.29	106.82	84.81	129.36	139.95	190.12	146.64	173.17	171.03	1.366	LASDV 5
70-90	136.22	149.09	115.29	107.88	85.94	130.91	141.46	194.02	151.99	184.34	180.05	1.301	LASDV 5
70-100	142.14	159.02	120.79	109.26	87.31	132.81	143.39	198.28	157.32	194.95	188.75	1.247	LASDV 5
70-110	148.52	168.98	126.74	110.90	88.83	134.98	145.63	202.78	162.58	205.08	197.29	1.214	LASDV 7
70-120	155.31	178.97	133.07	112.73	90.48	137.37	148.12	207.47	167.78	214.82	205.61	1.200	LASDV 7
70-130		189.01						212.28		224.22		1.186	LASDV 7
70-150		209.32						222.19		242.24		1.157	LASDV 7
70-170		230.03						232.37		259.40		1.128	LASDV 7
70-190		251.24						242.75		275.88		1.098	LASDV 7
70-210		273.03						290.02		328.59		1.203	LASDV 7
70-230		295.47						305.82		349.32		1.182	LASDV 7
70-250		318.62						322.01		370.07		1.161	LASDV 7
70-270		342.51						338.58		390.89		1.141	LASDV 7
70-290		367.16						355.50		411.85		1.122	LASDV 7
70-310		392.58						372.77		432.97		1.103	LASDV 7
80-80	134.59	147.09	113.93	106.67	84.92	129.37	139.85	191.65	149.71	181.74	177.75	1.303	LASDV 5
80-90	139.11	155.27	118.24	107.08	85.49	130.08	140.49	194.06	153.50	190.30	184.56	1.250	LASDV 5
80-100	144.24	163.64	123.09	107.89	86.35	131.26	141.66	196.98	157.46	198.63	191.32	1.214	LASDV 7
80-110	149.85	172.16	128.38	108.99	87.42	132.75	143.18	200.26	161.52	206.74	198.01	1.201	LASDV 7
80-120		180.82						203.81		214.63		1.187	LASDV 7
80-140		198.51						211.45		229.87		1.158	LASDV 7
80-160		216.68						219.60		244.51		1.128	LASDV 7

	HS20 +lane	0.9(2*HS20 +lane)	Tandem +lane	LASDV 1	LASDV 2	LASDV 3	LASDV 4	LASDV 5	LASDV 6	LASDV 7	LASDV 8	**MF**	**Controlling Vehicle**
Load Factor	1	1	1	1	1	1	1	1	1	1	1		
IM	*1.00*	*1.00*	*1.00*	*1.00*	*1.00*	*1.00*	*1.00*	*1.00*	*1.00*	*1.00*	*1.00*		
Span Length	**Design Vehicle Reactions (kips)**			**LASDV Reactions (kips)**									
80-280		337.79						325.73		377.48		1.118	LASDV 7
80-300		360.27						340.73		395.92		1.099	LASDV 7
80-320		383.45						356.06		414.54		1.081	LASDV 7
90-90	142.87	161.94	121.94	106.94	85.55	130.05	140.40	195.10	155.65	196.48	189.42	1.213	LASDV 7
90-100	147.30	168.97	76.15	107.26	85.98	130.59	140.88	196.88	158.44	202.87	194.51	1.201	LASDV 7
90-110		176.27						199.14		209.25		1.187	LASDV 7
90-130		191.53						204.60		221.89		1.159	LASDV 7
90-150		207.49						210.89		234.26		1.129	LASDV 7
90-170		224.04						217.70		246.37		1.100	LASDV 7
90-190		241.18						224.88		258.25		1.071	LASDV 7
90-210		258.89						265.57		303.15		1.171	LASDV 7
90-230		277.19						277.67		319.09		1.151	LASDV 7
90-250		296.09						290.16		335.11		1.132	LASDV 7
90-270		315.62						303.02		351.26		1.113	LASDV 7
90-290		335.77						316.21		367.57		1.095	LASDV 7
90-310		356.57						329.72		384.05		1.077	LASDV 7
100-100	151.08	174.81	129.95	107.14	86.01	130.55	140.79	197.62	160.01	207.46	198.12	1.187	LASDV 7
100-120		187.59						200.76		217.36		1.159	LASDV 7
100-140		201.44						205.22		227.53		1.130	LASDV 7
100-160		216.07						210.49		237.74		1.100	LASDV 7
100-180		231.38						216.27		247.92		1.071	LASDV 7
100-200		247.30						252.43		288.03		1.165	LASDV 7
100-220		263.81						262.98		302.15		1.145	LASDV 7
100-240		280.89						273.94		316.40		1.126	LASDV 7
120-120		196.87						200.96		222.38		1.130	LASDV 7
120-140		207.73						203.01		228.69		1.101	LASDV 7
120-160		219.68						206.13		235.61		1.073	LASDV 7
120-180		232.49						209.97		242.87		1.045	LASDV 7
120-200		246.00						242.63		278.66		1.133	LASDV 7

	HS20 +lane	0.9(2*HS20 +lane)	Tandem +lane	LASDV 1	LASDV 2	LASDV 3	LASDV 4	LASDV 5	LASDV 6	LASDV 7	LASDV 8	**MF**	**Controlling Vehicle**
Load Factor	1	1	1	1	1	1	1	1	1	1	1		
IM	*1.00*	*1.00*	*1.00*	*1.00*	*1.00*	*1.00*	*1.00*	*1.00*	*1.00*	*1.00*	*1.00*		
Span Length	**Design Vehicle Reactions (kips)**			**LASDV Reactions (kips)**									
140-140		216.07						203.03		231.77		1.073	LASDV 7
140-160		225.83						204.44		236.04		1.045	LASDV 7
140-180		236.62						206.75		241.00		1.019	LASDV 7
160-160		233.67						204.39		238.04		1.019	LASDV 7
160-180		242.75						205.42		241.08		0.993	LASDV 7
170-170		242.09						204.90		240.43		0.993	LASDV 7
200-200		266.34						256.01		295.64		1.110	LASDV 7
200-250		288.61						265.28		307.70		1.066	LASDV 7
200-300		314.77						277.79		323.00		1.026	LASDV 7
250-250		304.88						269.57		313.15		1.027	LASDV 7
250-300		325.78						277.82		322.99		0.991	LASDV 7
250-350		350.78						288.55		335.46		0.956	LASDV 7
300-300		342.29						282.65		328.44		0.960	LASDV 7
300-350		362.44						296.21		342.99		0.946	LASDV 7
500-500		488.38						333.51		382.58		0.783	LASDV 7

Table 1.4.2-6: Service Reactions for Simply Supported Spans Without Impact (kips)

	HS20 +lane	0.9(2*HS20 +lane)	Tandem +lane	LASDV 1	LASDV 2	LASDV 3	LASDV 4	LASDV 5	LASDV 6	LASDV 7	LASDV 8	**MF**	**Controlling Vehicle**
Load Factor	1	1	1	1	1	1	1	1	1	1	1		
IM	*1.00*	*1.00*	*1.00*	*1.00*	*1.00*	*1.00*	*1.00*	*1.00*	*1.00*	*1.00*	*1.00*		
Span Length	**Design Vehicle Reactions (kips)**			**LASDV Reactions (kips)**									
20-20	56.80	51.12	57.80	69.18	39.70	72.70	87.87	79.33	72.50	53.66	53.83	1.520	LASDV 4
20-30	67.47	60.72	62.67	80.38	50.80	88.28	97.18	90.74	77.50	69.17	64.72	1.440	LASDV 4
20-40	74.40	66.96	66.70	86.36	57.90	97.57	106.10	101.92	82.00	78.50	75.12	1.426	LASDV 4
20-50	80.96	72.86	70.40	89.95	63.32	103.15	111.93	111.42	84.70	85.70	83.07	1.383	LASDV 4
20-60	86.40	77.76	73.93	92.34	66.93	107.67	115.82	121.69	90.83	93.03	88.36	1.408	LASDV 5
20-70	91.20	82.08	77.37	94.05	69.51	111.25	118.60	129.84	99.79	99.07	96.75	1.424	LASDV 5
20-80	95.60	86.76	80.75	95.79	71.45	113.93	120.68	136.90	108.25	105.39	106.54	1.432	LASDV 5
20-90	99.73	93.60	84.09	97.15	72.96	116.02	123.09	142.39	115.72	113.15	116.23	1.428	LASDV 5
20-100	103.68	101.95	87.40	98.24	74.24	117.68	125.02	146.82	121.70	122.65	126.12	1.416	LASDV 5
20-110	107.49	110.09	90.69	99.12	75.49	119.05	126.60	151.55	126.59	132.79	134.20	1.377	LASDV 5
20-120	111.20	117.72	93.97	99.86	76.53	120.19	127.91	155.88	130.67	142.57	140.94	1.324	LASDV 5
20-140		130.94						162.97		158.56		1.245	LASDV 5
20-160		142.29						168.31		170.72		1.200	LASDV 7
20-180		152.40						172.45		180.18		1.182	LASDV 7
20-200		161.64						195.77		207.74		1.285	LASDV 7
20-220		170.25						200.58		215.93		1.268	LASDV 7
20-240		178.38						205.06		223.09		1.251	LASDV 7
20-260		186.15						209.16		229.76		1.234	LASDV 7
20-280		193.63						212.95		235.77		1.218	LASDV 7
20-300		200.88						216.54		241.24		1.201	LASDV 7
20-320		207.95						219.94		246.28		1.184	LASDV 7
20-340		214.86						223.18		250.96		1.168	LASDV 7
30-30	72.53	65.28	65.87	82.12	53.80	90.69	106.08	98.96	81.67	73.67	69.22	1.463	LASDV 4
30-40	79.47	71.52	69.90	87.62	60.70	99.98	110.73	112.01	84.17	83.29	79.51	1.410	LASDV 5
30-50	84.91	76.42	73.60	91.18	64.96	105.56	114.66	123.07	86.87	91.57	85.86	1.449	LASDV 5
30-60	89.60	80.64	77.13	93.58	67.93	109.28	118.24	132.71	94.83	97.08	91.42	1.481	LASDV 5
30-70	94.40	85.10	80.57	95.28	70.51	111.94	121.01	140.18	103.00	101.88	101.40	1.485	LASDV 5
30-80	98.80	90.24	83.95	96.56	72.45	113.93	123.09	145.83	111.42	110.35	110.44	1.476	LASDV 5
30-90	102.93	97.44	87.29	97.56	73.96	116.02	124.71	150.22	118.11	118.61	120.91	1.459	LASDV 5

	HS20 +lane	0.9(2*HS20 +lane)	Tandem +lane	LASDV 1	LASDV 2	LASDV 3	LASDV 4	LASDV 5	LASDV 6	LASDV 7	LASDV 8	**MF**	**Controlling Vehicle**
Load Factor	1	1	1	1	1	1	1	1	1	1	1		
IM	*1.00*	*1.00*	*1.00*	*1.00*	*1.00*	*1.00*	*1.00*	*1.00*	*1.00*	*1.00*	*1.00*		
Span Length	**Design Vehicle Reactions (kips)**			**LASDV Reactions (kips)**									
30-100	106.88	106.08	90.60	98.36	75.16	117.68	126.01	154.34	123.47	128.42	129.80	1.444	LASDV 5
30-110	110.69	114.20	93.89	99.12	76.15	119.05	127.07	157.94	128.09	138.98	137.08	1.383	LASDV 5
30-120	114.40	121.44	97.17	99.86	76.97	120.19	127.95	160.93	132.17	147.79	143.25	1.325	LASDV 5
30-130		128.01						163.47		155.24		1.277	LASDV 5
30-150		139.68						167.55		167.23		1.200	LASDV 5
30-170		150.35						171.72		177.34		1.179	LASDV 7
30-190		159.99						175.32		185.63		1.160	LASDV 7
30-210		168.89						199.32		213.37		1.263	LASDV 7
30-230		177.25						203.79		221.01		1.247	LASDV 7
30-250		185.18						207.87		227.75		1.230	LASDV 7
30-270		192.80						211.64		233.78		1.213	LASDV 7
30-290		200.16						215.16		239.26		1.195	LASDV 7
30-310		207.31						218.49		244.29		1.178	LASDV 7
30-330		214.30						221.72		248.95		1.162	LASDV 7
40-40	83.60	75.24	73.10	88.59	62.20	101.19	115.19	123.44	86.25	89.12	82.21	1.477	LASDV 5
40-50	89.04	80.14	76.80	91.89	66.46	106.77	117.98	133.62	89.10	95.80	90.82	1.501	LASDV 5
40-60	93.73	84.36	80.33	94.19	69.30	110.49	119.84	140.83	98.00	100.92	100.40	1.502	LASDV 5
40-70	98.00	88.82	83.77	95.90	71.33	113.14	122.39	146.38	106.36	106.14	110.48	1.494	LASDV 5
40-80	102.00	94.50	87.15	97.18	72.95	115.14	124.30	151.78	113.88	115.19	120.21	1.488	LASDV 5
40-90	106.13	103.20	90.49	98.18	74.46	116.68	125.92	156.13	120.39	124.94	127.77	1.471	LASDV 5
40-100	110.08	111.31	93.80	98.98	75.66	117.92	127.22	159.64	125.60	134.85	133.84	1.434	LASDV 5
40-110	113.89	118.60	97.09	99.63	76.65	119.05	128.28	162.52	129.93	144.09	141.35	1.370	LASDV 5
40-120	117.60	125.16	100.37	100.17	77.47	120.19	129.16	164.92	133.58	152.29	147.71	1.318	LASDV 5
40-140		137.78						169.42		165.46		1.230	LASDV 5
40-160		148.68						172.95		175.84		1.183	LASDV 7
40-180		158.44						175.70		183.92		1.161	LASDV 7
40-200		167.40						197.91		210.42		1.257	LASDV 7
40-220		176.01						202.28		218.21		1.240	LASDV 7
40-240		184.14						206.44		225.28		1.223	LASDV 7
40-260		191.91						210.35		231.58		1.207	LASDV 7
40-280		199.39						213.99		237.28		1.190	LASDV 7

	HS20 +lane	0.9(2*HS20 +lane)	Tandem +lane	LASDV 1	LASDV 2	LASDV 3	LASDV 4	LASDV 5	LASDV 6	LASDV 7	LASDV 8	**MF**	**Controlling Vehicle**
Load Factor	1	1	1	1	1	1	1	1	1	1	1		
IM	*1.00*	*1.00*	*1.00*	*1.00*	*1.00*	*1.00*	*1.00*	*1.00*	*1.00*	*1.00*	*1.00*		
Span Length	**Design Vehicle Reactions (kips)**			**LASDV Reactions (kips)**									
40-300		206.64						217.41		242.52		1.174	LASDV 7
40-320		213.71						220.65		247.36		1.157	LASDV 7
50-50	92.80	83.52	80.00	92.47	67.36	107.49	120.65	140.55	91.80	99.30	98.77	1.515	LASDV 5
50-60	97.49	87.74	83.53	94.67	70.20	111.21	122.51	147.29	100.70	103.75	107.65	1.511	LASDV 5
50-70	101.76	92.32	86.97	96.27	72.23	113.87	123.84	152.34	109.06	111.71	118.42	1.497	LASDV 5
50-80	105.76	99.40	90.35	97.55	73.75	115.86	125.26	156.33	116.58	122.44	127.15	1.478	LASDV 5
50-90	109.58	108.38	93.69	98.55	74.93	117.41	126.75	159.87	122.42	132.97	134.11	1.459	LASDV 5
50-100	113.28	116.21	97.00	99.35	75.96	118.65	127.94	163.23	127.10	141.45	140.17	1.405	LASDV 5
50-110	117.09	123.50	100.29	100.00	76.95	119.66	129.00	166.06	131.36	149.43	145.96	1.345	LASDV 5
50-130		136.05						170.49		162.87		1.253	LASDV 5
50-150		146.78						173.74		173.83		1.184	LASDV 7
50-170		157.06						176.67		182.42		1.161	LASDV 7
50-190		166.39						179.12		189.62		1.140	LASDV 7
50-210		175.04						202.10		216.44		1.237	LASDV 7
50-230		183.18						205.74		223.26		1.219	LASDV 7
50-250		190.94						209.13		229.34		1.201	LASDV 7
50-270		198.56						212.64		235.11		1.184	LASDV 7
50-290		205.92						216.10		240.49		1.168	LASDV 7
50-310		213.07						219.39		245.47		1.152	LASDV 7
60-60	101.07	90.96	86.73	95.06	70.80	111.69	124.29	151.96	102.50	110.64	113.86	1.504	LASDV 5
60-70	105.33	96.69	90.17	96.63	72.83	114.35	125.62	156.74	111.24	119.41	124.11	1.488	LASDV 5
60-80	109.33	104.22	93.55	97.81	74.35	116.34	126.62	160.51	118.38	130.90	132.47	1.468	LASDV 5
60-90	113.16	113.28	96.89	98.79	75.53	117.89	127.39	163.55	124.22	140.55	139.68	1.444	LASDV 5
60-100	116.85	121.10	100.20	99.59	76.48	119.13	128.58	166.03	128.90	148.53	145.73	1.371	LASDV 5
60-110	120.46	128.03	103.49	100.24	77.25	120.15	129.56	168.56	132.73	155.42	150.68	1.317	LASDV 5
60-120		134.28						170.86		161.21		1.272	LASDV 5
60-140		145.82						174.59		171.94		1.197	LASDV 5
60-160		155.91						177.41		180.70		1.159	LASDV 7
60-180		165.04						179.61		188.19		1.140	LASDV 7
60-200		174.00						201.67		214.21		1.231	LASDV 7
60-220		182.38						205.47		221.49		1.214	LASDV 7

	HS20 +lane	0.9(2*HS20 +lane)	Tandem +lane	LASDV 1	LASDV 2	LASDV 3	LASDV 4	LASDV 5	LASDV 6	LASDV 7	LASDV 8	**MF**	**Controlling Vehicle**
Load Factor	1	1	1	1	1	1	1	1	1	1	1		
IM	*1.00*	*1.00*	*1.00*	*1.00*	*1.00*	*1.00*	*1.00*	*1.00*	*1.00*	*1.00*	*1.00*		
Span Length	**Design Vehicle Reactions (kips)**			**LASDV Reactions (kips)**									
60-240		190.32						208.97		227.90		1.197	LASDV 7
60-260		197.93						212.23		233.62		1.180	LASDV 7
60-280		205.27						215.32		238.82		1.163	LASDV 7
60-300		212.40						218.27		243.62		1.147	LASDV 7
60-320		219.47						221.31		248.27		1.131	LASDV 7
70-70	108.80	101.01	93.37	96.91	73.26	114.69	126.89	160.11	113.29	125.78	130.55	1.472	LASDV 5
70-80	112.80	108.54	96.75	98.09	74.78	116.69	127.89	163.66	120.09	137.13	139.08	1.451	LASDV 5
70-90	116.62	117.60	100.09	99.00	75.96	118.24	128.66	166.60	125.51	146.59	145.87	1.417	LASDV 5
70-100	120.32	125.42	103.40	99.77	76.91	119.48	129.28	168.98	130.19	154.30	151.41	1.347	LASDV 5
70-110		132.35						171.01		160.62		1.292	LASDV 5
70-130		144.33						174.64		171.12		1.210	LASDV 5
70-150		154.85						177.78		179.46		1.159	LASDV 7
70-170		164.41						180.26		186.85		1.136	LASDV 7
70-190		173.18						182.22		193.03		1.115	LASDV 7
70-210		181.37						204.81		219.45		1.210	LASDV 7
70-230		189.52						208.33		225.93		1.192	LASDV 7
70-250		197.28						211.71		231.93		1.176	LASDV 7
70-270		204.75						214.88		237.37		1.159	LASDV 7
70-290		211.98						217.89		242.34		1.143	LASDV 7
80-80	116.20	112.50	99.95	98.29	75.10	116.95	128.84	166.22	121.62	142.56	144.23	1.430	LASDV 5
80-90	120.02	121.56	103.29	99.21	76.28	118.49	129.62	168.96	126.92	151.38	150.85	1.390	LASDV 5
80-100	123.72	129.38	106.60	99.95	77.23	119.73	130.24	171.31	131.15	158.84	156.28	1.324	LASDV 5
80-120		142.56						174.92		170.41		1.227	LASDV 5
80-140		153.62						177.69		179.10		1.166	LASDV 7
80-160		163.35						180.39		185.91		1.138	LASDV 7
80-180		172.48						182.56		192.03		1.113	LASDV 7
80-200		180.94						204.32		217.42		1.202	LASDV 7
80-220		188.90						207.76		224.05		1.186	LASDV 7
80-240		196.50						210.96		230.15		1.171	LASDV 7
80-260		204.11						214.12		235.62		1.154	LASDV 7
80-280		211.45						217.21		240.73		1.138	LASDV 7

	HS20 +lane	0.9(2*HS20 +lane)	Tandem +lane	LASDV 1	LASDV 2	LASDV 3	LASDV 4	LASDV 5	LASDV 6	LASDV 7	LASDV 8	**MF**	**Controlling Vehicle**
Load Factor	1	1	1	1	1	1	1	1	1	1	1		
IM	*1.00*	*1.00*	*1.00*	*1.00*	*1.00*	*1.00*	*1.00*	*1.00*	*1.00*	*1.00*	*1.00*		
Span Length	**Design Vehicle Reactions (kips)**			**LASDV Reactions (kips)**									
80-300		218.58						220.15		245.50		1.123	LASDV 7
90-90	123.38	125.28	106.49	99.37	76.53	118.70	130.36	170.97	128.11	155.61	154.87	1.365	LASDV 5
90-100	127.08	133.10	109.80	100.11	77.48	119.94	130.98	173.15	132.34	162.66	160.16	1.301	LASDV 5
90-110		140.03						175.07		168.67		1.250	LASDV 5
90-130		152.01						178.07		178.39		1.173	LASDV 7
90-150		162.34						180.36		185.69		1.144	LASDV 7
90-170		171.59						182.58		191.63		1.117	LASDV 7
90-190		180.22						184.47		196.66		1.091	LASDV 7
90-210		188.41						207.06		222.29		1.180	LASDV 7
90-230		196.18						210.37		228.32		1.164	LASDV 7
90-250		203.63						213.47		233.92		1.149	LASDV 7
90-270		210.83						216.41		239.13		1.134	LASDV 7
100-100	130.40	136.66	113.00	100.24	77.68	120.10	131.57	174.78	133.30	166.05	163.38	1.279	LASDV 5
100-120		149.83						178.14		176.76		1.189	LASDV 5
100-140		160.89						180.67		185.02		1.150	LASDV 7
100-160		170.62						182.66		191.22		1.121	LASDV 7
100-180		179.47						184.43		196.49		1.095	LASDV 7
100-200		187.70						206.11		220.73		1.176	LASDV 7
100-220		195.67						209.53		226.71		1.159	LASDV 7
100-240		203.27						212.73		232.32		1.143	LASDV 7
100-260		210.58						215.74		237.43		1.128	LASDV 7
120-120		156.60						180.48		181.71		1.160	LASDV 7
120-140		167.66						182.87		189.28		1.129	LASDV 7
120-160		177.39						184.75		195.45		1.102	LASDV 7
120-180		186.24						186.28		200.27		1.075	LASDV 7
120-200		194.47						207.52		224.26		1.153	LASDV 7
120-220		202.25						210.78		229.71		1.136	LASDV 7
120-240		209.70						213.93		234.60		1.119	LASDV 7
140-140		174.14						184.55		192.89		1.108	LASDV 7
140-160		183.87						186.33		198.57		1.080	LASDV 7
140-180		192.72						187.80		203.29		1.055	LASDV 7

	HS20 +lane	0.9(2*HS20 +lane)	Tandem +lane	LASDV 1	LASDV 2	LASDV 3	LASDV 4	LASDV 5	LASDV 6	LASDV 7	LASDV 8	**MF**	**Controlling Vehicle**
Load Factor	1	1	1	1	1	1	1	1	1	1	1		
IM	*1.00*	*1.00*	*1.00*	*1.00*	*1.00*	*1.00*	*1.00*	*1.00*	*1.00*	*1.00*	*1.00*		
Span Length	**Design Vehicle Reactions (kips)**			**LASDV Reactions (kips)**									
140-200		200.95						208.99		227.15		1.130	LASDV 7
140-220		208.73						212.01		232.31		1.113	LASDV 7
160-160		190.17						187.61		201.28		1.058	LASDV 7
160-180		199.02						188.98		205.69		1.034	LASDV 7
160-200		207.25						210.16		229.42		1.107	LASDV 7
170-170		197.79						188.87		204.74		1.035	LASDV 7
170-190		206.30						190.09		208.67		1.011	LASDV 7
180-180		205.20						189.99		207.81		1.013	LASDV 7
180-200		213.43						211.08		231.33		1.084	LASDV 7
190-190		212.44						190.99		210.55		0.991	LASDV 7
200-200		219.53						231.89		253.03		1.153	LASDV 7
200-250		238.38						227.04		264.54		1.110	LASDV 7
200-300		255.74						245.37		274.16		1.072	LASDV 7
250-250		253.38						245.31		272.42		1.075	LASDV 7
250-300		270.75						251.66		281.70		1.040	LASDV 7
250-350		287.27						257.67		290.01		1.010	LASDV 7

1.4.3—Find the Best Function to Cover All Data

Microsoft Excel was used to find the best function to describe and encompass all results in Tables 1.4.2-1 through 1.4.2-6. The data in these tables were plotted into diagrams and the best upper boundary functions were generated using the software. The resulting functions and diagrams are presented below:

1.4.3.1—Factored Support Reaction with or without Dynamic Impact

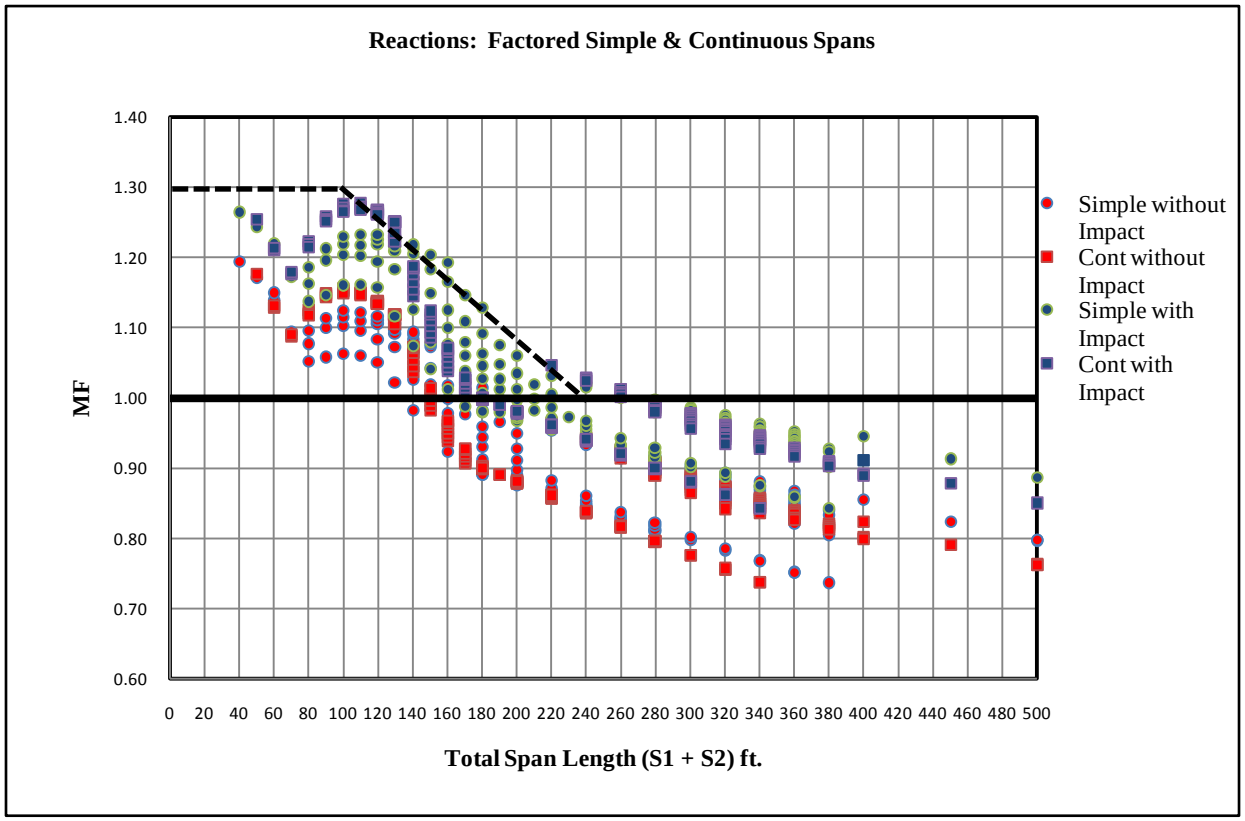

Figure 1.4.3.1-1: Upper Boundary Lines for Factored Support Reaction

Span Length	Magnification Factor (MF_{SR})
$S_1+S_2 \leq 100$ ft.	1.30
100 ft. < S_1+S_2< 240 ft.	Interpolation
$S_1+S_2 \geq 240$ ft.	1.00

where:

MF_{SR} = Magnification Factor for support reaction
S_1 = Length of shorter span, ft.
S_2 = Length of longer span, ft.

1.4.3.2—Support Reaction without Dynamic Impact (Used for Calculating Service Pile Load Only)

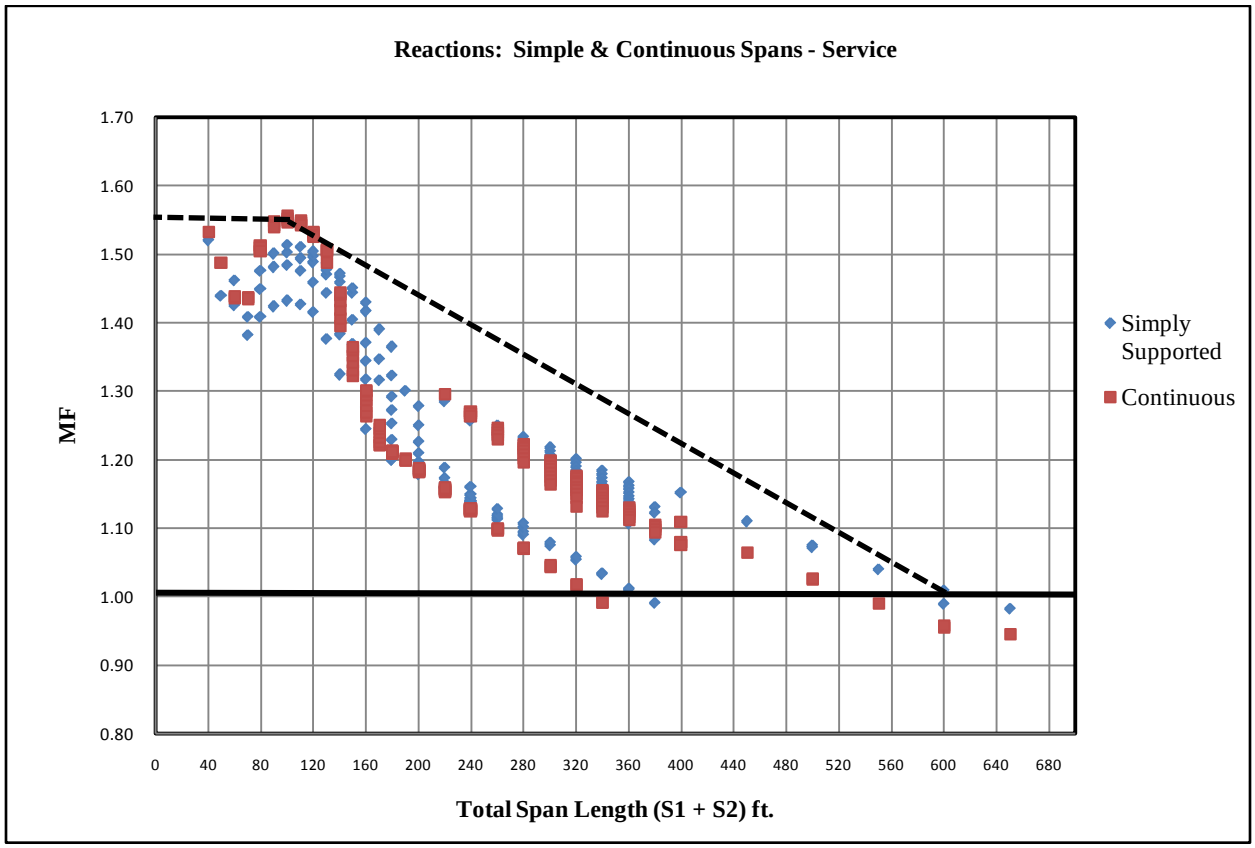

Figure 1.4.3.2-1: Upper Boundary Lines for Support Reaction (Service)

Span Length	Magnification Factor (MF_{SR})
$S_1+S_2 \leq 100$ ft.	1.55
100 ft. < S_1+S_2< 600 ft.	Interpolation
$S_1+S_2 \geq 600$ ft.	1.00

where:

MF_{SR} = Magnification Factor for support reaction
S_1 = Length of shorter span, ft.
S_2 = Length of longer span, ft.

1.4.4—Summary of Equations for Support Reactions

Span Length	Magnification Factor
	Factored Support Reaction
$S_1+S_2 \leq 100$ ft.	1.30
100 ft. < S_1+S_2< 240 ft.	Interpolation
$S_1+S_2 \geq 240$ ft.	1.00

Span Length	Magnification Factor
	Support Reaction (Service)
$S_1+S_2 \leq 100$ ft.	1.55
100 ft. < S_1+S_2< 600 ft.	Interpolation
$S_1+S_2 \geq 600$ ft.	1.00

1.5—SUMMARY AND CONCLUSIONS

Three distinct Magnification Factors (MF) are developed for flexure, MF_F, shear, MF_V, and support reactions, MF_{SR}. The factors are derived based on rigorous analysis of bridges with span lengths varying from 20 ft. to 500 ft. An "Upper Boundary Approach Method" is used in the development of these Magnification Factors. After considerable studies, it was determined that using a single magnification factor will not cover all load effects and will result in significant conservatism in some span ranges; therefore, a variable magnification factor approach is adapted. The value of the MF varies, based on the span length, to accommodate optimum economical solution and yet result in a conservative design.

This study covered both simple and continuous spans and the MF values are applicable to all types of bridges.

The proposed model results in a design load = MF*HL-93. This approach is selected to provide easy transition to the designer and maintain consistency with *AASHTO LRFD Design Specifications*. The result and benefits are such that engineers need only to design for one vehicle (MF*HL-93), which will result in substantial savings to the amount of time and cost of bridge designs and will also ensure meeting the minimum load rating requirements.

This new approach is implemented in the *BDEM*. The new live load model shall be the only design requirement and eliminates the need to check the "Louisiana Special Design Vehicles."

For support reaction, flexure moment and shear force effect, the Upper Boundary Approach can envelop the LASDVs fairly well.

The project results clearly show that the proposed magnification factors MF_{SR}, MF_F and MF_V as components of a new "Louisiana Design Vehicle Live Load" (LA DVLL) are of significant impact and influence for the design of all bridges in Louisiana.

CHAPTER 2 – TEMPERATURE RANGE STUDY

TABLE OF CONTENTS

2.1─BACKGROUND AND OBJECTIVE OF RESEARCH 1
2.2─HISTORIC TEMPERATURE RECORD 1
2.3─SUMMARY AND RECOMMENDATIONS 4

2.1—BACKGROUND AND OBJECTIVE OF RESEARCH

Temperature range is one of the major parameters that is considered when calculating the temperature induced stresses and movements in bridge design. It is important that these stresses and movements be accurately predicted. Underestimation of the temperature range may lead to cracking and reduce the service life of bridges. Overestimation of the temperature range will require excessive movement capacity in the bearings and expansion joints, thereby increasing the cost of bridge construction.

The current AASHTO Specifications include only two temperature ranges, one for "moderate climate" and the other for "cold climate". This may not necessarily reflect the actual temperature conditions in Louisiana; therefore, a study of actual temperature conditions is necessary to provide more accurate design information.

The objective of this research is to find the actual temperature range to be used in the design of concrete and steel bridges. The research is based on the historic temperature records from 2000 to 2012 in different areas of the state. Temperature data is summarized and recommended modification to the AASHTO Specifications is given in the following sections.

2.2—HISTORIC TEMPERATURE RECORD

Temperature records from 2000 to 2012 are shown in Table 2.2-1. The source of historic temperature information is Louisiana Office of State Climatology (http://www.losc.lsu.edu/cgi-bin/newsmonthly.py).

Table 2.2-1: Historic Temperature Record in Louisiana (2000 to 2012)

Year	Location	Max/Min Temperature, °F											
		Jan	Feb	Mar	Apr	May	June	Jul	Aug	Sept	Oct	Nov	Dec
2000	Northwest	80/20	82/21	87/30	87/33	94/50	95/52	103/61	110/63	111/40	94/33	87/26	71/20
	North-central	80/21	84/21	89/31	89/32	98/48	96/51	105/59	109/60	111/41	98/32	87/22	72/15
	Northeast	81/20	84/21	85/29	88/36	96/49	95/53	106/60	108/64	104/44	93/34	87/26	74/19
	West-central	81/20	84/21	88/30	90/31	96/50	96/55	105/59	107/60	110/42	94/33	87/21	75/19
	Central	81/12	83/21	87/29	90/32	98/50	99/53	104/59	109/60	110/42	96/35	87/25	77/18
	East-Central	81/21	86/21	90/28	88/30	98/50	100/55	105/60	107/62	105/47	92/35	86/25	77/18
	Southwest	82/24	83/24	86/34	88/33	96/52	95/57	101/58	108/62	109/45	93/40	86/28	81/22
	South-central	81/26	83/27	85/37	88/35	95/56	96/60	100/65	104/65	103/47	91/40	85/27	76/22
	Southeast	82/25	86/19	87/38	88/39	98/57	98/59	104/65	103/61	103/52	92/44	90/29	80/20
2001	Northwest	72/13	79/20	79/30	89/37	92/47	95/61	102/65	100/64	94/43	89/32	84/25	80/23
	North-central	79/10	81/21	79/28	89/34	92/49	95/58	100/64	99/64	95/41	88/30	85/25	78/23
	Northeast	75/14	84/23	79/31	90/37	93/51	96/59	100/60	99/61	94/42	89/32	86/24	79/26
	West-central	75/14	81/24	80/30	89/33	98/45	97/58	101/64	101/65	95/44	89/32	83/25	79/22
	Central	75/15	90/22	80/28	94/33	96/49	96/56	99/38	100/62	95/42	88/31	85/26	81/23
	East-Central	76/19	84/25	79/31	89/36	94/45	96/59	97/62	95/67	92/46	88/31	84/29	82/22
	Southwest	75/19	82/27	80/33	89/37	93/45	95/58	97/65	99/68	94/48	87/35	85/31	79/24
	South-central	75/20	85/27	81/34	92/41	94/50	97/61	96/69	98/66	95/47	88/34	85/32	82/25
	Southeast	80/13	86/31	84/34	92/40	95/48	98/64	98/58	98/63	94/51	92/39	86/41	85/20

Table 2.2-1 (continued): Historic Temperature Record in Louisiana (2000 to 2012)

Year	Location	Max/Min Temperature, °F											
		Jan	Feb	Mar	Apr	May	June	Jul	Aug	Sept	Oct	Nov	Dec
2002	Northwest	80/15	80/18	83/15	93/37	94/44	95/59	98/68	100/65	99/54	97/41	85/27	76/25
	North-central	81/14	83/16	85/14	92/35	93/42	97/55	100/64	100/63	101/57	93/41	86/20	77/23
	Northeast	82/18	83/20	86/17	93/38	94/44	97/58	99/67	98/64	98/58	92/41	87/26	78/24
	West-central	83/15	81/17	86/14	93/37	95/42	97/54	101/63	101/63	99/56	92/41	86/27	77/27
	Central	84/16	84/18	86/17	92/37	95/40	98/58	100/67	99/63	100/53	95/42	90/28	80/24
	East-Central	84/17	83/20	87/20	90/38	95/43	96/60	97/68	96/65	97/63	91/40	84/29	77/27
	Southwest	82/19	80/23	87/20	89/45	93/48	96/62	97/70	99/67	97/61	91/33	84/31	76/28
	South-central	83/18	83/21	86/24	89/41	92/47	95/62	96/67	97/63	96/60	92/42	84/28	77/26
	Southeast	86/23	83/28	89/22	91/46	94/52	98/66	99/70	98/69	96/65	92/49	86/35	82/27
2003	Northwest	79/18	79/28	79/31	89/33	98/53	98/62	100/68	101/66	96/50	91/42	86/25	80/22
	North-central	79/11	74/26	81/29	90/31	95/51	98/60	98/62	101/66	93/44	91/39	89/25	73/22
	Northeast	75/15	77/25	80/27	90/34	95/53	96/59	97/60	100/65	95/44	91/36	88/22	75/21
	West-central	79/18	76/27	81/30	92/29	98/47	98/57	98/65	100/64	94/44	91/34	94/23	76/22
	Central	79/16	78/27	82/30	100/28	96/50	98/59	98/65	102/66	96/46	94/37	88/23	84/23
	East-Central	76/17	78/29	84/29	89/34	93/0	95/60	95/68	96/62	94/47	92/43	89/25	78/24
	Southwest	76/21	76/31	80/36	89/34	94/54	94/61	98/62	99/66	93/51	89/41	87/28	80/28
	South-central	76/20	78/31	81/34	89/32	94/56	95/67	97/67	99/67	94/51	90/44	87/29	79/27
	Southeast	77/22	80/33	85/35	87/35	93/59	95/67	96/68	96/68	94/53	89/43	86/29	78/29
2004	Northwest	77/17	76/22	86/27	87/30	91/48	95/64	98/63	100/56	98/54	90/43	86/34	83/19
	North-central	76/18	77/22	88/33	89/35	92/44	95/61	99/61	96/52	98/52	91/39	86/32	75/17
	Northeast	79/19	75/23	87/33	89/36	94/45	96/58	100/62	99/51	95/52	94/41	89/34	76/19
	West-central	78/18	78/23	87/32	89/32	93/44	95/64	98/61	97/52	100/52	92/42	88/33	77/19
	Central	91/18	77/24	87/33	89/35	93/43	95/56	101/63	101/51	102/50	94/41	89/34	79/17
	East-Central	80/19	76/26	86/33	88/35	92/41	96/60	99/59	97/50	100/51	95/24	86/34	79/23
	Southwest	79/20	76/29	85/37	87/35	91/49	95/64	99/61	98/54	99/57	95/46	88/37	79/21
	South-central	79/24	77/30	85/39	87/40	92/48	94/67	98/67	98/56	100/56	95/46	91/38	80/22
	Southeast	81/26	78/32	86/38	91/43	93/47	98/64	99/70	99/58	98/62	93/48	89/39	80/25
2005	Northwest	77/24	83/29	87/30	88/33	96/40	101/59	101/64	104/65	104/54	92/33	86/27	84/17
	North-central	78/20	81/27	87/30	87/37	96/40	98/52	102/64	105/65	104/50	94/29	88/23	83/19
	Northeast	78/21	79/29	84/31	87/38	97/40	98/50	100/60	104/62	102/51	93/29	89/10	82/18
	West-central	79/22	80/28	85/30	87/35	97/37	99/57	101/61	101/62	103/55	92/30	90/25	81/20
	Central	82/22	83/29	85/30	89/36	100/40	100/56	101/66	102/65	106/52	94/30	88/25	82/22
	East-Central	80/23	86/29	88/30	87/37	96/44	97/61	100/67	99/68	99/62	93/33	89/27	81/25
	Southwest	79/26	81/29	86/30	87/42	99/44	99/64	100/68	100/49	101/61	93/38	87/31	80/28
	South-central	81/25	82/35	85/36	87/44	98/49	98/66	101/69	99/68	99/64	93/37	89/30	82/27
	Southeast	80/29	82/37	87/36	88/44	96/51	99/68	100/69	99/68	98/68	91/36	89/33	81/31

Table 2.2-1 (continued): Historic Temperature Record in Louisiana (2000 to 2012)

Year	Location	Max/Min Temperature, °F											
		Jan	Feb	Mar	Apr	May	June	Jul	Aug	Sept	Oct	Nov	Dec
2006	Northwest	80/27	78/22	89/30	94/40	94/47	96/57	106/64	105/61	99/47	96/35	86/25	78/18
	North-central	79/22	76/20	88/27	94/34	94/44	97/54	103/60	105/58	99/42	95/31	84/23	81/15
	Northeast	79/22	78/23	90/31	96/38	94/48	98/55	102/59	104/62	95/42	98/34	84/23	82/16
	West-central	79/24	78/21	88/28	94/37	93/44	95/56	101/63	107/58	96/46	95/33	85/24	81/16
	Central	81/26	81/23	90/28	94/37	94/46	98/56	101/60	103/57	96/46	96/35	86/22	82/17
	East-Central	83/22	83/23	87/30	93/40	95/47	100/57	100/67	101/66	96/50	97/38	84/28	82/22
	Southwest	81/31	79/27	85/34	92/45	93/50	99/61	99/65	101/65	95/51	94/45	84/30	83/23
	South-central	85/29	81/25	85/32	93/42	92/51	102/60	99/66	101/65	93/55	95/43	84/21	83/23
	Southeast	81/28	82/29	83/36	92/38	95/54	100/42	98/70	98/67	95/56	93/43	87/31	82/27
2007	Northwest	80/21	82/19	86/26	89/36	93/49	97/63	96/63	109/67	96/57	94/37	86/28	82/23
	North-central	77/18	82/20	87/22	88/33	93/46	96/60	96/61	105/68	98/54	94/38	84/27	83/23
	Northeast	77/21	82/19	87/25	88/33	92/44	98/58	97/51	103/65	96/53	93/38	84/24	83/20
	West-central	78/20	83/20	85/23	89/32	91/45	96/60	96/61	102/68	98/56	92/35	86/28	82/22
	Central	78/19	82/23	86/24	90/34	99/44	98/61	97/51	107/50	96/53	94/32	85/28	86/23
	East-Central	79/21	82/25	87/27	88/34	92/48	97/62	95/65	104/68	95/56	91/41	83/29	85/24
	Southwest	77/27	80/25	84/30	89/16	93/50	96/64	97/65	103/69	96/62	95/41	85/33	82/28
	South-central	80/27	83/24	85/19	89/36	93/51	96/62	95/64	103/69	96/59	92/40	84/33	83/25
	Southeast	80/29	83/27	85/32	91/39	93/53	97/64	97/68	107/71	95/60	91/44	85/33	83/29
2008	Northwest	79/19	80/24	87/30	87/34	95/44	97/63	106/61	107/66	94/51	87/30	80/23	83/22
	North-central	78/16	80/25	87/27	91/30	94/43	96/60	104/60	105/65	96/48	88/27	81/25	86/21
	Northeast	77/15	80/27	87/27	91/31	94/41	98/58	104/59	103/61	94/48	88/28	83/23	80/23
	West-central	78/19	80/25	88/29	89/31	95/40	96/60	105/58	106/65	94/49	88/28	82/27	77/23
	Central	82/17	82/26	88/-4	90/29	96/45	98/61	105/59	104/64	95/1	91/29	85/26	81/24
	East-Central	81/17	83/27	88/29	90/31	95/46	97/62	100/61	97/64	94/52	89/31	82/25	83/24
	Southwest	78/22	82/31	90/32	89/36	94/51	96/64	99/64	101/58	95/54	91/34	85/31	82/27
	South-central	80/23	81/31	86/30	90/33	92/47	96/62	98/67	97/69	93/54	90/30	81/30	82/25
	Southeast	80/25	82/34	84/33	89/37	93/53	97/64	99/68	97/69	114/56	90/34	83/32	81/30
2009	Northwest	81/19	83/24	87/25	91/33	90/47	103/59	105/65	96/61	97/52	92/39	81/30	70/20
	North-central	81/18	83/24	84/25	90/30	92/47	105/54	102/60	97/56	96/48	92/36	79/28	76/19
	Northeast	78/21	84/22	84/26	90/33	90/50	102/56	102/59	97/55	94/50	91/36	80/24	76/20
	West-central	79/19	84/21	85/23	91/27	92/46	103/55	105/62	98/58	94/49	94/36	80/27	76/19
	Central	79/20	85/25	86/19	91/28	92/45	106/53	107/61	99/57	97/49	97/35	90/27	79/23
	East-Central	81/22	83/24	85/28	87/33	91/51	103/57	102/64	96/60	94/52	93/38	83/28	75/25
	Southwest	79/25	80/29	83/30	88/35	89/47	103/59	101/67	98/59	94/55	93/40	81/32	77/25
	South-central	79/24	81/28	85/30	86/36	92/50	102/56	100/53	97/59	94/55	93/39	80/30	77/27
	Southeast	80/26	92/28	83/33	87/39	92/48	103/63	100/65	99/65	93/59	97/43	85/33	78/30

Table 2.2-1 (continued): Historic Temperature Record in Louisiana (2000 to 2012)

Year	Location	Max/Min Temperature, °F											
		Jan	Feb	Mar	Apr	May	June	Jul	Aug	Sept	Oct	Nov	Dec
2010	Northwest	76/12	70/23	80/27	85/38	96/50	104/69	100/72	105/59	101/50	99/33	84/28	82/19
	North-central	74/11	68/21	81/25	86/35	95/47	102/65	102/71	106/57	102/46	95/29	84/26	82/15
	Northeast	76/15	72/23	79/26	86/36	95/46	100/68	102/69	106/62	101/47	94/29	87/24	84/13
	West-central	76/11	72/20	82/24	87/34	96/47	102/66	102/67	105/64	99/47	93/32	84/24	80/16
	Central	79/11	74/20	82/17	88/28	97/50	101/66	104/69	105/63	99/46	94/32	85/27	80/17
	East-Central	79/15	72/25	81/28	88/40	95/55	99/67	98/68	103/67	97/50	94/33	84/29	78/18
	Southwest	79/17	75/26	82/29	89/41	97/55	100/68	99/70	101/58	99/54	92/36	84/26	79/23
	South-central	82/17	72/20	80/31	89/40	95/55	98/69	99/70	101/69	96/53	91/36	82/30	77/23
	Southeast	79/21	75/30	82/32	87/37	96/55	97/70	98/69	103/71	97/45	93/41	98/32	85/24
2011	Northwest	77/19	82/15	88/31	92/36	97/43	105/61	108/69	112/69	107/47	92/32	84/30	70/23
	North-central	79/16	85/14	88/28	92/32	96/39	104/56	104/66	107/63	103/44	95/28	87/24	81/20
	Northeast	79/16	87/17	88/32	91/39	95/39	103/64	103/66	105/61	102/45	91/27	85/25	80/21
	West-central	76/16	81/14	87/28	91/32	96/37	103/63	102/68	108/64	102/45	90/30	83/25	79/20
	Central	76/18	85/19	86/19	93/32	98/42	107/66	102/66	109/51	102/44	90/30	84/27	79/23
	East-Central	72/19	87/20	86/33	89/39	96/41	103/64	100/68	101/55	97/51	89/31	89/27	80/24
	Southwest	74/20	82/18	85/36	92/39	96/44	103/67	101/68	112/68	101/51	90/35	84/32	80/25
	South-central	77/18	83/23	87/38	89/39	94/45	103/65	100/68	102/68	97/41	90/36	84/32	81/28
	Southeast	77/25	84/12	89/16	90/43	96/52	101/61	100/64	100/72	95/56	94/42	89/30	86/33
2012	Northwest	80/21	87/24	85/32	87/42	95/50	103/59	103/71	101/61	103/53	88/34	90/29	80/22
	North-central	81/16	89/21	86/28	87/41	96/49	104/59	106/69	103/56	100/50	86/31	85/25	80/19
	Northeast	79/21	87/22	88/33	89/39	96/51	101/56	103/67	99/56	98/40	91/23	87/20	82/20
	West-central	80/17	84/22	85/28	87/40	95/53	102/56	99/64	100/56	98/47	87/29	87/26	81/20
	Central	93/23	84/2	88/16	89/22	95/51	104/56	102/67	99/62	100/47	89/31	87/27	82/20
	East-Central	81/22	81/25	85/35	89/40	96/54	101/56	97/60	96/65	96/54	88/32	84/28	80/27
	Southwest	79/27	82/28	86/37	88/45	94/58	101/61	98/62	98/62	97/53	88/35	86/30	82/27
	South-central	80/28	83/29	85/37	89/45	94/53	101/59	98/67	96/68	97/56	88/35	86/33	82/28
	Southeast	81/25	83/30	87/38	88/45	97/42	102/60	100/70	97/67	94/62	90/36	84/32	80/30

2.3—SUMMARY AND RECOMMENDATIONS

The minimum and maximum measured temperature and calculated temperature ranges in each region of Louisiana are summarized in Tables 2.3-1 to 2.3-3.

Table 2.3-1: Summary of Minimum Temperature, °F

Area	2000	2001	2002	2003	2004	2005	2006	2007	2008	2009	2010	2011	2012	Avg
Northwest	20	13	15	18	17	17	18	19	19	19	12	15	21	17
North-central	15	10	14	11	17	19	15	18	16	18	11	14	16	15
Northeast	19	14	17	15	19	18	16	19	15	20	13	16	20	17
West-central	19	14	14	18	18	20	16	20	19	19	11	14	17	17
Central	12	15	16	16	17	22	17	19	-4	20	11	18	2	14
East-Central	18	19	17	0	19	23	22	21	17	22	15	19	22	18
Southwest	22	19	19	21	20	26	23	25	22	25	17	18	27	22
South-central	22	20	18	20	22	25	23	24	23	24	17	18	28	22
Southeast	20	13	22	22	25	29	27	27	24	26	21	12	25	23

Average of all areas: 18

Table 2.3-2: Summary of Maximum Temperature, °F

Area	2000	2001	2002	2003	2004	2005	2006	2007	2008	2009	2010	2011	2012	Avg
Northwest	111	102	100	101	100	104	106	109	107	105	105	112	103	105
North-central	111	100	101	101	99	105	105	105	105	105	106	107	106	104
Northeast	108	100	99	100	100	104	104	103	104	102	106	105	103	103
West-central	110	101	101	100	100	103	107	102	106	105	105	108	102	104
Central	110	100	100	102	102	106	103	107	105	107	105	109	104	105
East-Central	107	97	97	96	100	100	101	104	100	103	103	103	101	101
Southwest	109	99	99	99	99	101	101	103	101	103	101	112	101	102
South-central	104	98	97	99	100	101	101	103	98	102	101	103	101	101
Southeast	104	98	99	96	99	100	100	107	114	103	103	101	102	102

Average of all areas: 103

Table 2.3-3: Summary of Temperature Range, °F

Area	2000	2001	2002	2003	2004	2005	2006	2007	2008	2009	2010	2011	2012	Avg
Northwest	91	89	85	83	83	87	88	90	88	86	93	97	82	88
North-central	96	90	87	90	82	86	90	87	89	87	95	93	90	89
Northeast	89	86	82	85	81	86	88	84	89	82	93	89	83	86
West-central	91	87	87	82	82	83	91	82	87	86	94	94	85	87
Central	98	85	84	86	85	84	86	88	109	87	94	91	102	91
East-Central	89	78	80	96	81	77	79	83	83	81	88	84	79	83
Southwest	87	80	80	78	79	75	78	78	79	78	84	94	74	80
South-central	82	78	79	79	78	76	78	79	75	78	84	85	73	79
Southeast	84	85	77	74	74	71	73	80	90	77	82	89	77	79

Average of all areas: 85

Based on the above findings, Table 2.3-4 is recommended to replace Table *A3.12.2.1-1* in *AASHTO LRFD Bridge Design Specifications.* The design values for steel bridges are based on Louisiana historical practice. The base construction temperature is assumed to be 68°F.

Table 2.3-4: Recommended Temperature Ranges

Material	Temperature Range	Rise	Fall	Minimum Temperature	Maximum Temperature
Concrete Girder Bridges	85°F	35°F	50°F	18°F	103°F
Steel Girder Bridges	120°F	52°F	68°F	0°F	120°F