ALTERNATIVE 1

Rehabilitation/Widening by 4 Feet

ALTERNATIVE 1: WIDEN TO SHOW 28' DIMENSION ROADWAY

2 - 12' LANES, 2 - 2' SHOULDERS

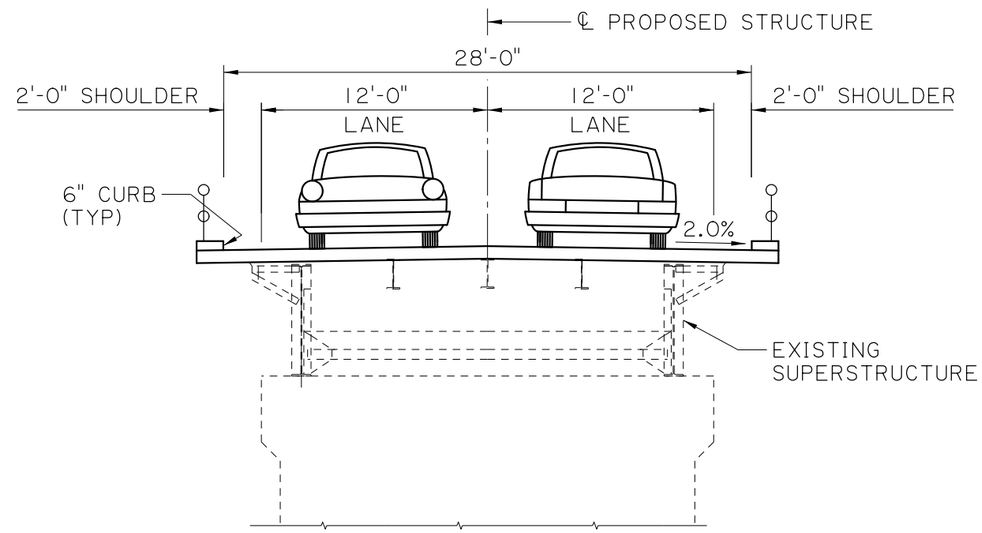

PROPOSED AT PIVOT PIER MAIN SPAN
TYPICAL SECTION

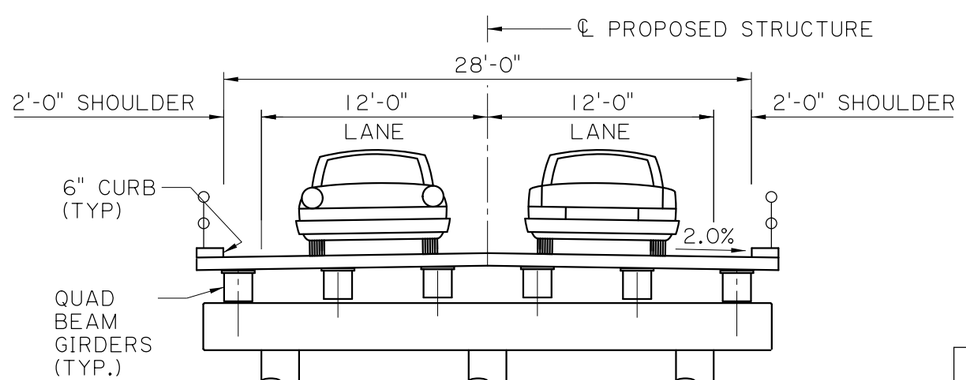

PROPOSED APPROACH SPAN
TYPICAL SECTION

CHECK PRINTS

PRELIMINARY	*Louisiana Department of Transportation and Development*
FOR REVIEW ONLY	*ENGINEER: BRADLEY MISTICH* *LICENSE #: 41996* *DATE: 8/2/2018*

CHECK PRINTS

R:\Gang9_Users\00271113 Jennifer Prestridge\Projects\For Bradley\H.000425 Alternatives\H.000425 Alternatives.dgn 8/2/2018 06:2

SHEET NUMBER

PARISH: CALCASIEU
CONTROL SECTION: 012-01
STATE PROJECT: H.000425

DESIGNED / CHECKED
DETAILED / CHECKED
REVIEWED / SERIES #

REVISION OR CHANGE ORDER DESCRIPTION | BY | NO. | DATE

ALTERNATIVE 1

LA-12: SABINE RIVER BRIDGE

DOTD BRIDGE DESIGN

PRELIMINARY

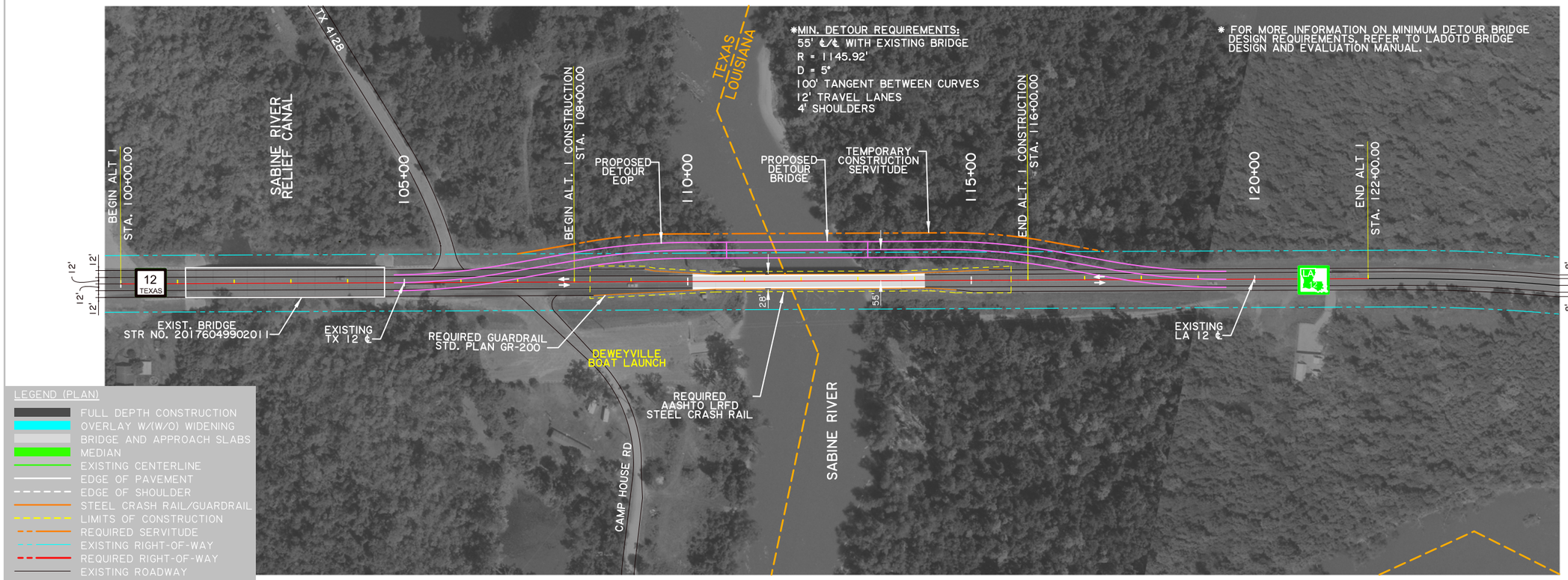

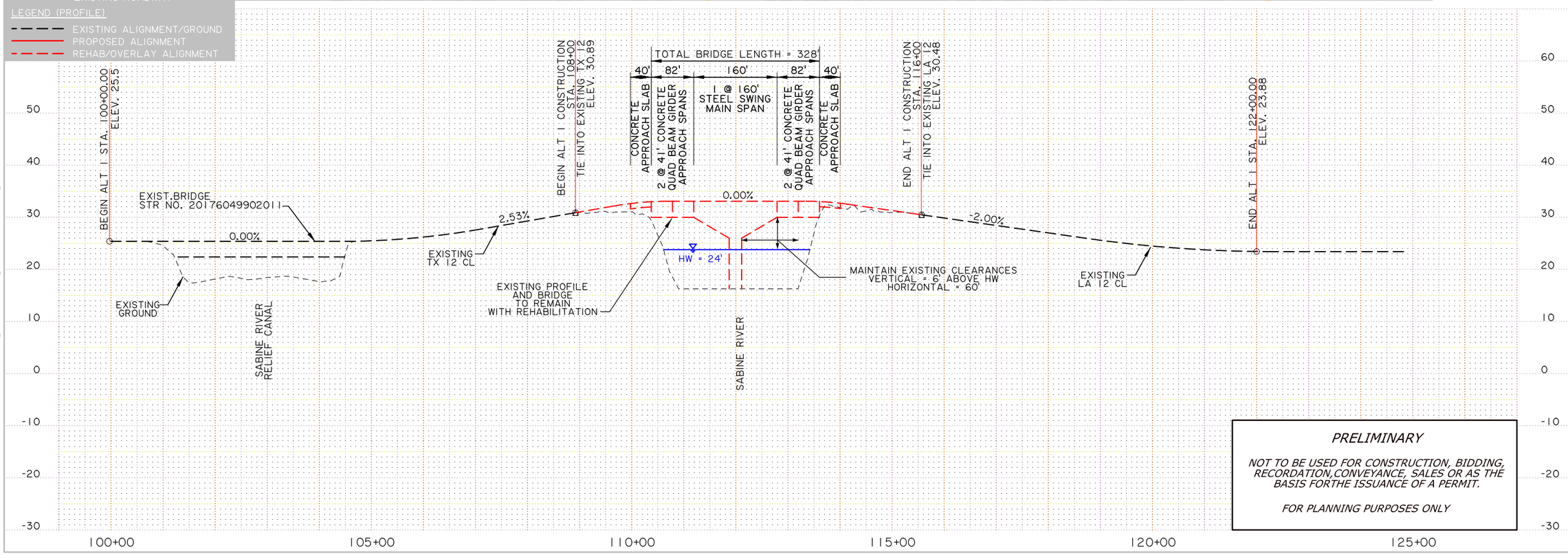

PRELIMINARY

NOT TO BE USED FOR CONSTRUCTION, BIDDING, RECORDATION,CONVEYANCE, SALES OR AS THE BASIS FORTHE ISSUANCE OF A PERMIT.

FOR PLANNING PURPOSES ONLY

SHEET NUMBER	2a
PARISH	CALCASIEU
CONTROL SECTION	012-01,012-02,499-01,499-02
STATE PROJECT	H.000425.1
DESIGNED JB / CHECKED MB	
DETAILED JB / CHECKED SP	
SERIES NUMBER	1 OF 1

NO. DATE REVISION OR CHANGE ORDER DESCRIPTION BY

ALTERNATIVE 1
REHABILITATION WITH WIDENING (28')

LA 12 SABINE RIVER BRIDGE

BUCHART HORN
CIVIL ENGINEERS • LAND SURVEYORS • PLANNERS

J:\PROJ\81047-02\CADD\CADDesign\Roadway\Sheet02a.dgn

ALTERNATIVE 2

Rehabilitation/Widening by 16 Feet

ALTERNATIVE 2: WIDEN TO 40' ROADWAY

2 - 12' LANES, 2 - 8' SHOULDERS

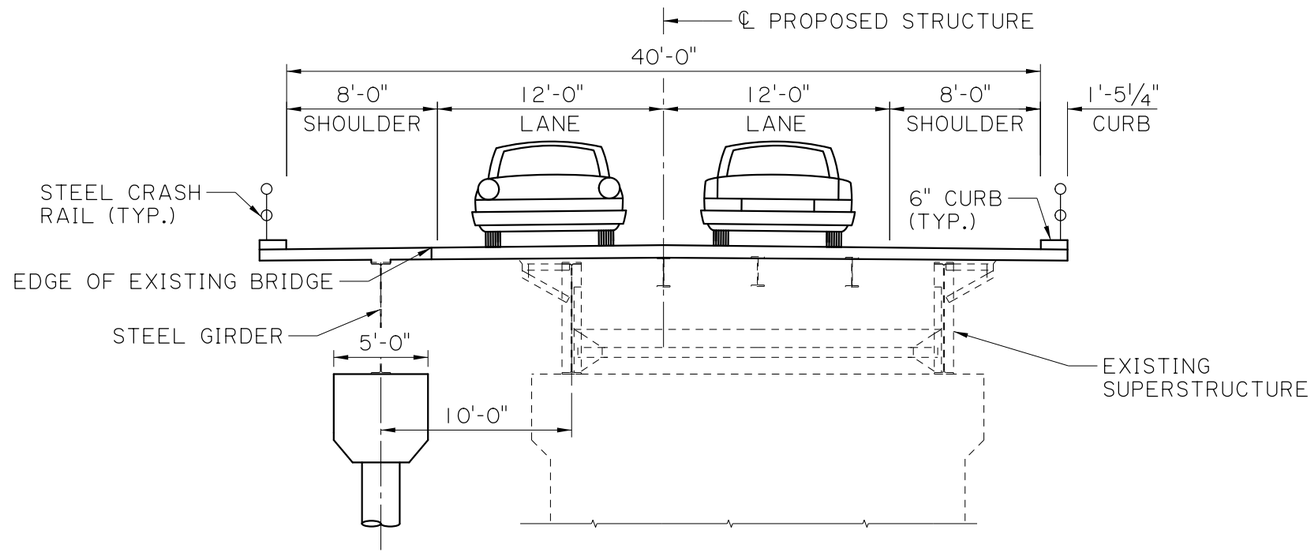

PROPOSED AT PIVOT PIER MAIN SPAN
TYPICAL SECTION

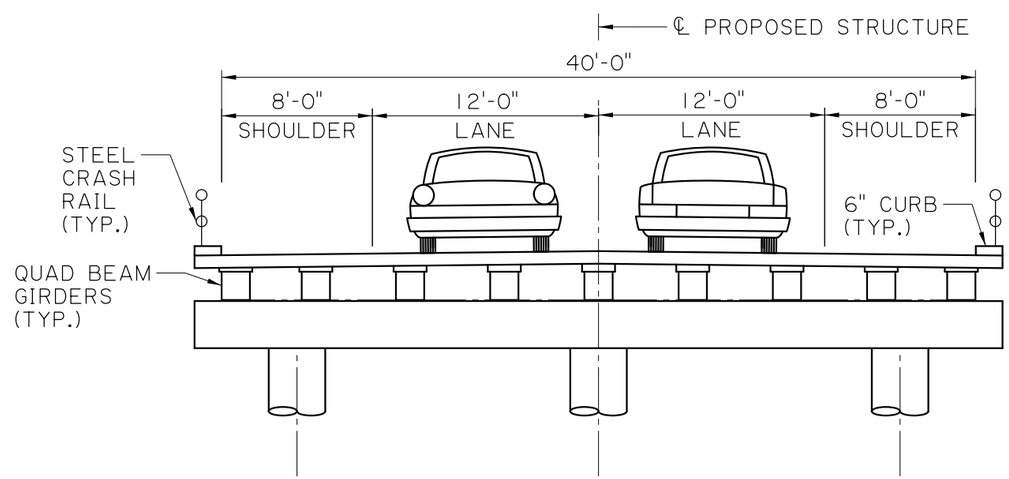

PROPOSED APPROACH SPAN
TYPICAL SECTION

CHECK PRINTS

PRELIMINARY	*Louisiana Department of Transportation and Development*
FOR REVIEW ONLY	*ENGINEER: BRADLEY MISTICH* *LICENSE #: 41996* *DATE: 8/2/2018*

SHEET NUMBER

PARISH: CALCASIEU
CONTROL SECTION: 012-01
STATE PROJECT: H.000425

DESIGNED / CHECKED
DETAILED / CHECKED
REVIEWED / SERIES #

NO. | DATE | REVISION OR CHANGE ORDER DESCRIPTION | BY

ALTERNATIVE 2

LA-12: SABINE RIVER BRIDGE

DOTD BRIDGE DESIGN

CHECK PRINTS

R:\Gang9_Users\00271113 Jennifer Prestridge\Projects\For Bradley\H.000425 Alternatives\H.000425 Alternatives.dgn 8/2/2018 06:2

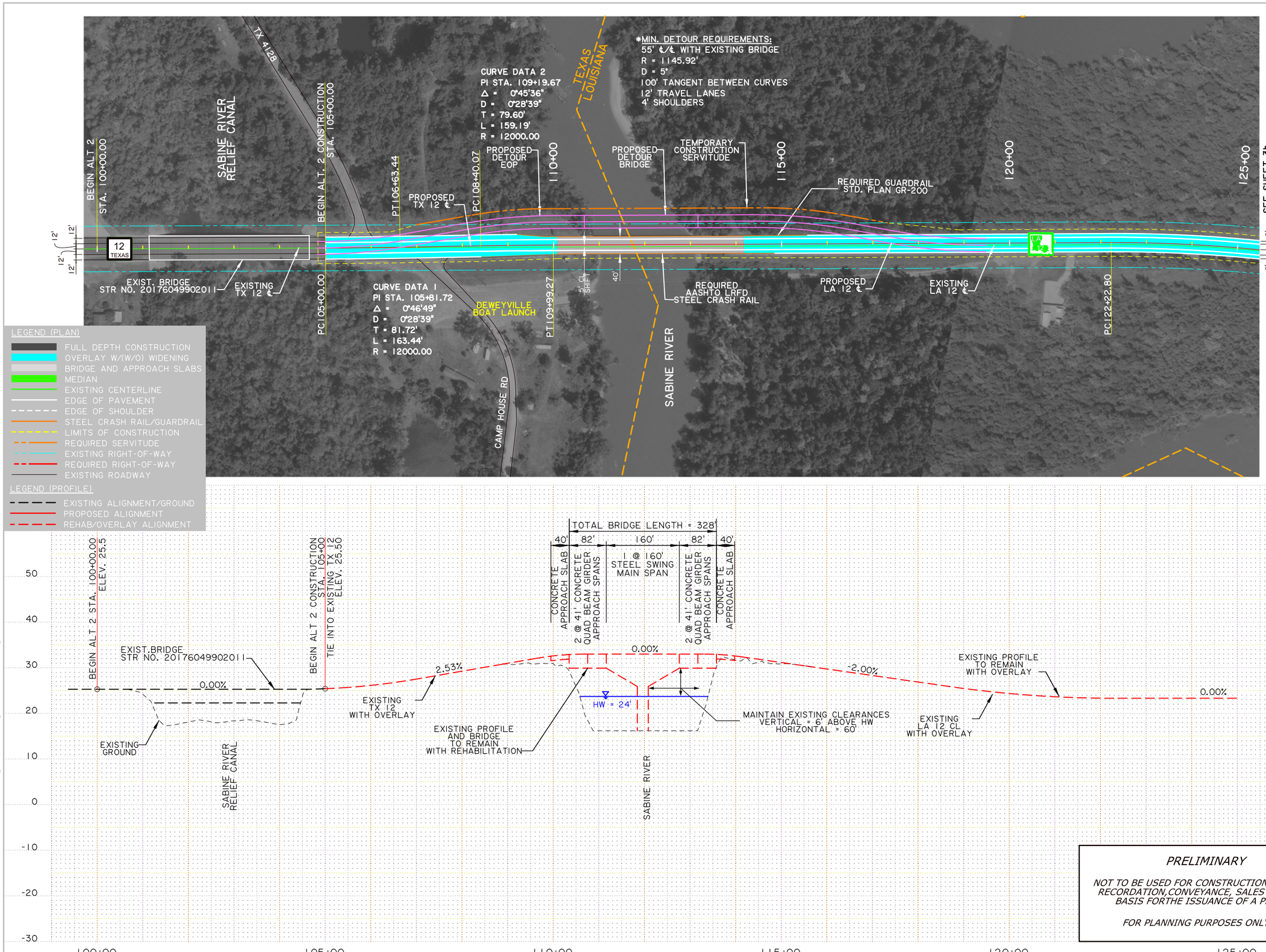

PRELIMINARY

NOT TO BE USED FOR CONSTRUCTION, BIDDING, RECORDATION, CONVEYANCE, SALES OR AS THE BASIS FORTHE ISSUANCE OF A PERMIT.

FOR PLANNING PURPOSES ONLY

SHEET NUMBER 3a

PARISH CALCASIEU

CONTROL SECTION 012-01,012-02,499-01,499-02

STATE PROJECT H.000425.1

DESIGNED JB CHECKED MB

DETAILED JB CHECKED SP

SERIES NUMBER 1 OF 2

NO. DATE REVISION OR CHANGE ORDER DESCRIPTION BY

ALTERNATIVE 2
REHABILITATION WITH WIDENING (40')

LA 12 SABINE RIVER BRIDGE

BUCHART HORN

J:\PROJ\81047-02\CADD\CADDesign\Roadway\Sheet03a.dgn

10/24/2016 12:15:05 PRELIMINARY

PRELIMINARY

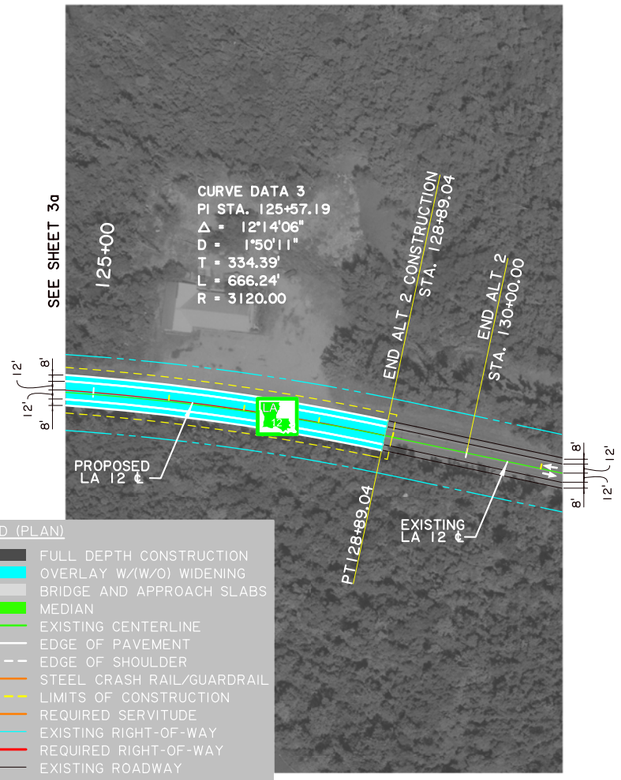

LEGEND (PLAN)

- FULL DEPTH CONSTRUCTION
- OVERLAY W/(W/O) WIDENING
- BRIDGE AND APPROACH SLABS
- MEDIAN
- EXISTING CENTERLINE
- EDGE OF PAVEMENT
- EDGE OF SHOULDER
- STEEL CRASH RAIL/GUARDRAIL
- LIMITS OF CONSTRUCTION
- REQUIRED SERVITUDE
- EXISTING RIGHT-OF-WAY
- REQUIRED RIGHT-OF-WAY
- EXISTING ROADWAY

LEGEND (PROFILE)

- EXISTING ALIGNMENT/GROUND
- PROPOSED ALIGNMENT
- REHAB/OVERLAY ALIGNMENT

Scale : 1" = 200'

N

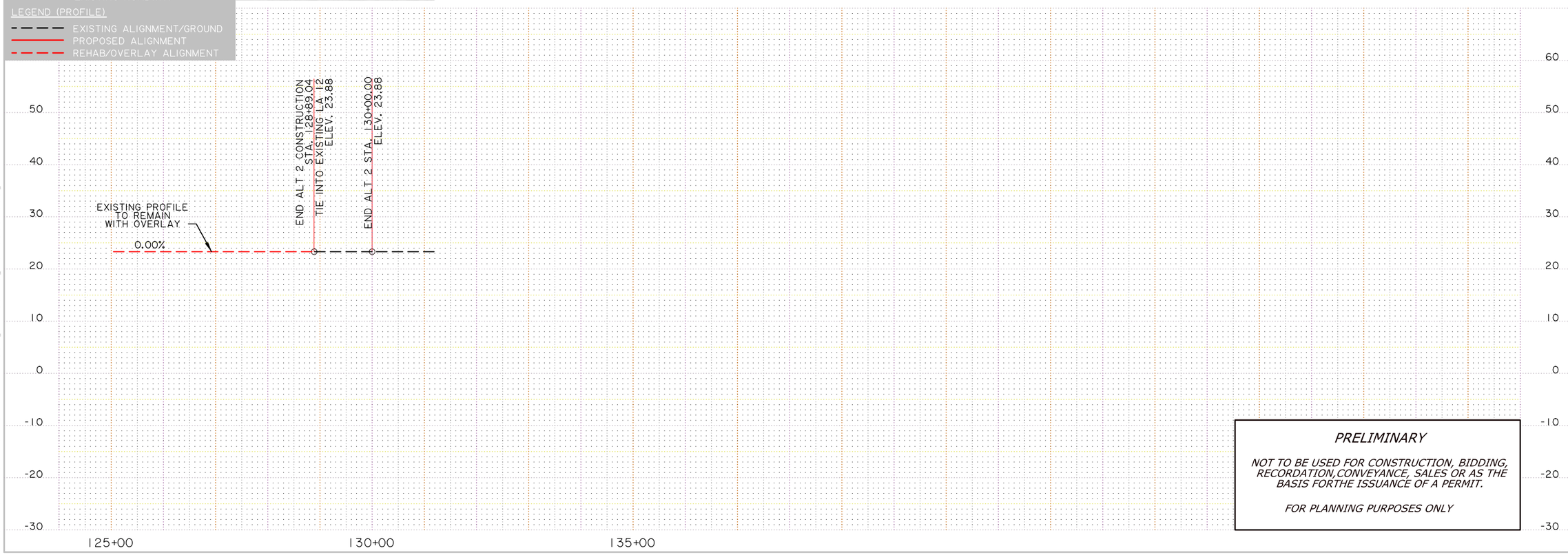

PRELIMINARY

NOT TO BE USED FOR CONSTRUCTION, BIDDING, RECORDATION,CONVEYANCE, SALES OR AS THE BASIS FORTHE ISSUANCE OF A PERMIT.

FOR PLANNING PURPOSES ONLY

SHEET NUMBER	3b
PARISH	CALCASIEU
CONTROL SECTION	012-01,012-02,499-01,499-02
STATE PROJECT	H.000425.1
DESIGNED JB / CHECKED MB	
DETAILED JB / CHECKED SP	
SERIES NUMBER	2 OF 2

NO.	DATE	REVISION OR CHANGE ORDER DESCRIPTION	BY

ALTERNATIVE 2
REHABILITATION WITH WIDENING (40')

LA 12 SABINE RIVER BRIDGE

BUCHART HORN
EN. INNEER • LAN. NITE. • PLANNER

J:\PROJ\81047-02\CADD\CADDesign\Roadway\Sheet03b.dgn 10/24/2016 12:15:43

ALTERNATIVE 3

COUPLET WITH CONSTRUCTION OF NEW ADJACENT BRIDGE

ALTERNATIVE 3: COUPLET - PROPOSED 28'-0" WIDE BRIDGE AND EXISTING STRUCTURE WIDENED TO 28'-0"

2 - 12' LANES, 2 - 4' INSIDE SHOULDERS, 2 - 12' OUTSIDE SHOULDERS

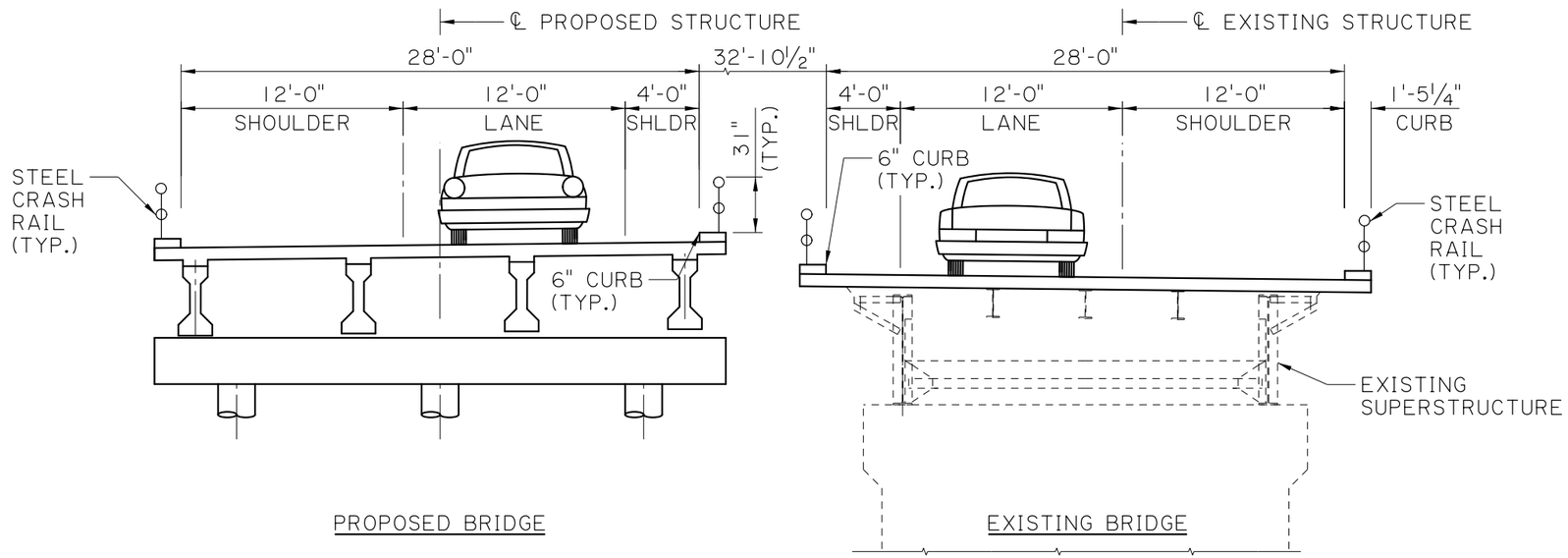

PROPOSED MAIN SPAN
TYPICAL SECTION

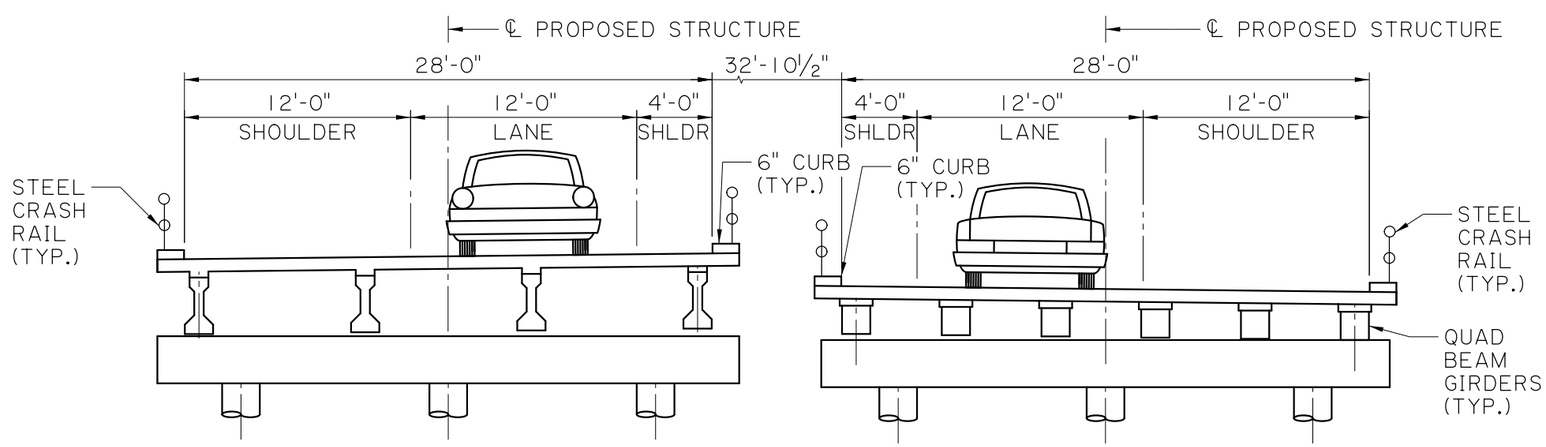

PROPOSED APPROACH SPAN
TYPICAL SECTION

CHECK PRINTS

Louisiana Department of Transportation and Development

ENGINEER: BRADLEY MISTICH
LICENSE #: 41996
DATE: 8/2/2018

PRELIMINARY

FOR REVIEW ONLY

CHECK PRINTS
R:\Gang9_Users\00271113 Jennifer Prestridge\Projects\For Bradley\H.000425 Alternatives\H.000425 Alternatives.dgn 8/2/2018 06:2

SHEET NUMBER	
PARISH	CALCASIEU
CONTROL SECTION	012-01
STATE PROJECT	H.000425
DESIGNED / CHECKED	
DETAILED / CHECKED	
REVIEWED / SERIES #	

NO.	DATE	REVISION OR CHANGE ORDER DESCRIPTION	BY

ALTERNATIVE 3

LA-12: SABINE RIVER BRIDGE

DOTD BRIDGE DESIGN

PRELIMINARY

LEGEND (PLAN)

- FULL DEPTH CONSTRUCTION
- OVERLAY W/(W/O) WIDENING
- BRIDGE AND APPROACH SLABS
- MEDIAN
- EXISTING CENTERLINE
- EDGE OF PAVEMENT
- EDGE OF SHOULDER
- STEEL CRASH RAIL/GUARDRAIL
- LIMITS OF CONSTRUCTION
- REQUIRED SERVITUDE
- EXISTING RIGHT-OF-WAY
- REQUIRED RIGHT-OF-WAY
- EXISTING ROADWAY

LEGEND (PROFILE)

- EXISTING ALIGNMENT/GROUND
- PROPOSED ALIGNMENT
- REHAB/OVERLAY ALIGNMENT

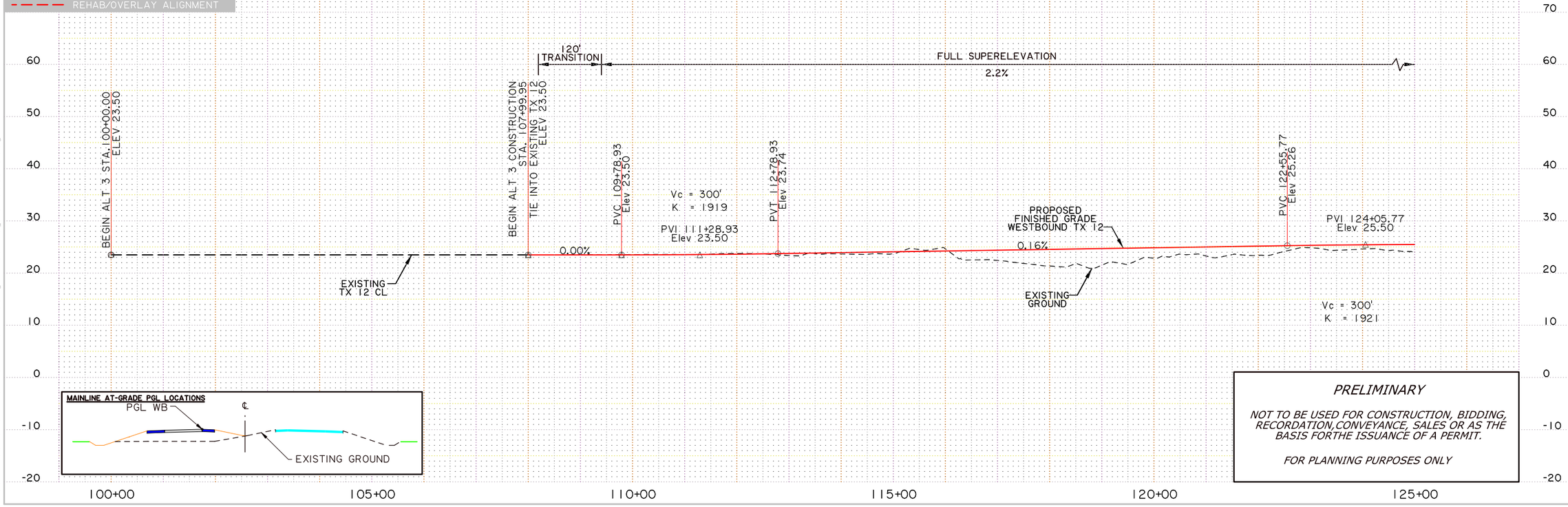

MAINLINE AT-GRADE PGL LOCATIONS

PRELIMINARY

NOT TO BE USED FOR CONSTRUCTION, BIDDING, RECORDATION, CONVEYANCE, SALES OR AS THE BASIS FORTHE ISSUANCE OF A PERMIT.

FOR PLANNING PURPOSES ONLY

SHEET NUMBER	4a
PARISH	CALCASIEU
CONTROL SECTION	012-01,012-02,499-01,499-02
STATE PROJECT	H.000425.1
DESIGNED / CHECKED	JB / MB
DETAILED / CHECKED	JB / SP
SERIES NUMBER	1 OF 3

ALTERNATIVE 3
COUPLET ALTERNATIVE

LA 12 SABINE RIVER BRIDGE

BUCHARTHORN

10/24/2016 12:16:15
J:\PROJ\81047-02\CADD\CADDesign\Roadway\Sheet04a.dgn

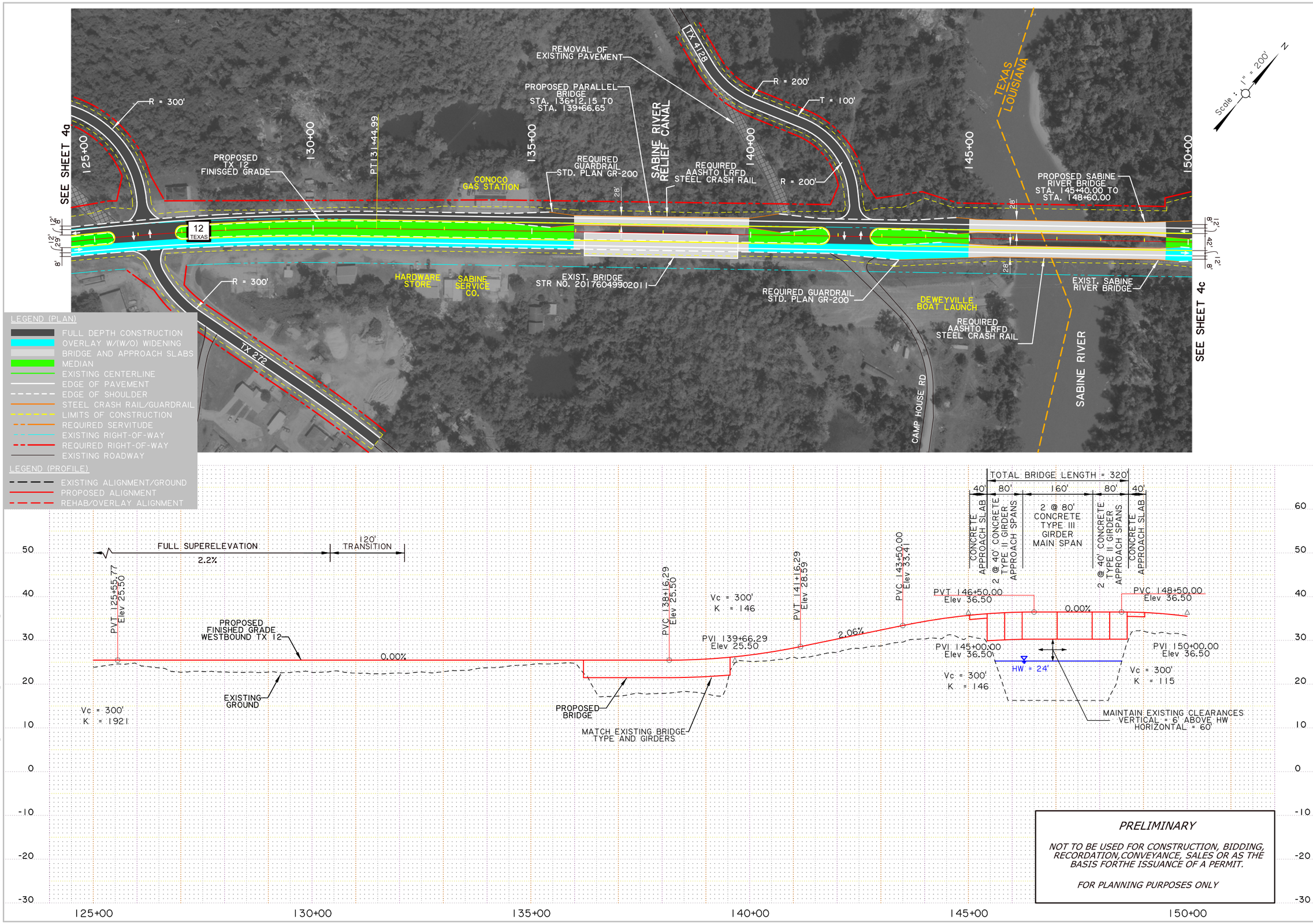

PRELIMINARY

NOT TO BE USED FOR CONSTRUCTION, BIDDING, RECORDATION, CONVEYANCE, SALES OR AS THE BASIS FORTHE ISSUANCE OF A PERMIT.

FOR PLANNING PURPOSES ONLY

SHEET NUMBER 4b

PARISH CALCASIEU

CONTROL SECTION 012-01,012-02,499-01,499-02

STATE PROJECT H.000425.1

DESIGNED JB CHECKED MB

DETAILED JP CHECKED SP

SERIES NUMBER 2 OF 3

NO. DATE REVISION OR CHANGE ORDER DESCRIPTION BY

ALTERNATIVE 3 COUPLET ALTERNATIVE

LA 12 SABINE RIVER BRIDGE

BUCHART HORN

10/24/2016 12:16:52

J:\PROJ\81047-02\CADD\CADDesign\Roadway\Sheet04b.dgn

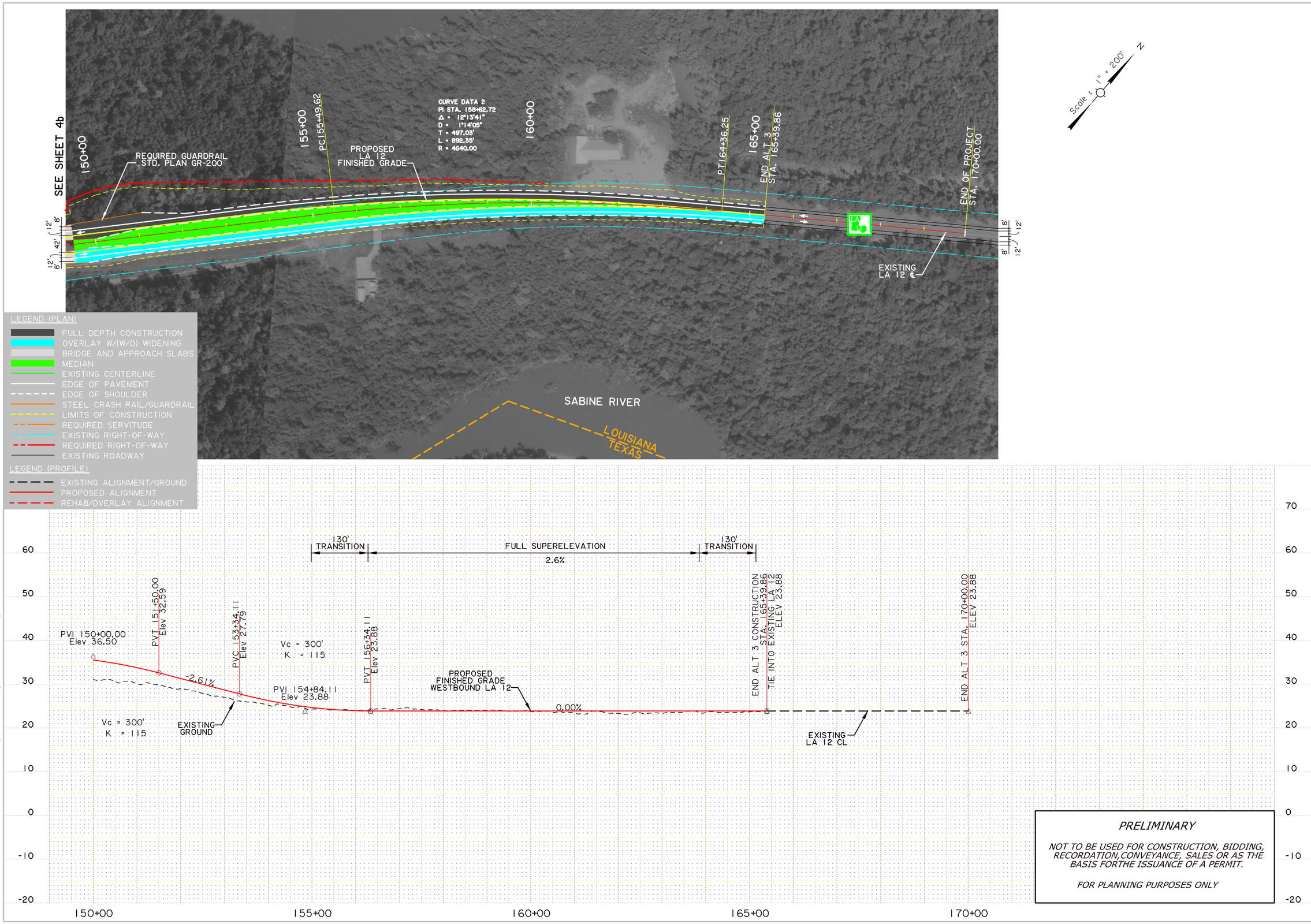

PRELIMINARY

PRELIMINARY

NOT TO BE USED FOR CONSTRUCTION, BIDDING, RECORDATION, CONVEYANCE, SALES OR AS THE BASIS FORTHE ISSUANCE OF A PERMIT.

FOR PLANNING PURPOSES ONLY

SHEET NUMBER 4c

PARISH CALCASIEU

CONTROL SECTION 012-01,012-02,499-01,499-02

STATE PROJECT H.000425.1

DESIGNED JB
CHECKED MB
DETAILED JB
CHECKED SP
SERIES NUMBER 3 OF 3

NO. DATE REVISION OR CHANGE ORDER DESCRIPTION BY

ALTERNATIVE 3
COUPLET ALTERNATIVE

LA 12 SABINE RIVER BRIDGE

BUCHART HORN

10/24/2016 12:17:44

J:\PROJ\81047-02\CADD\CADDesign\Roadway\Sheet04c.dgn

ALTERNATIVE 4

Bridge Replacement

ALTERNATIVE 4: NEW 40' WIDE ROADWAY

2 - 12' LANES, 2 - 8' SHOULDERS

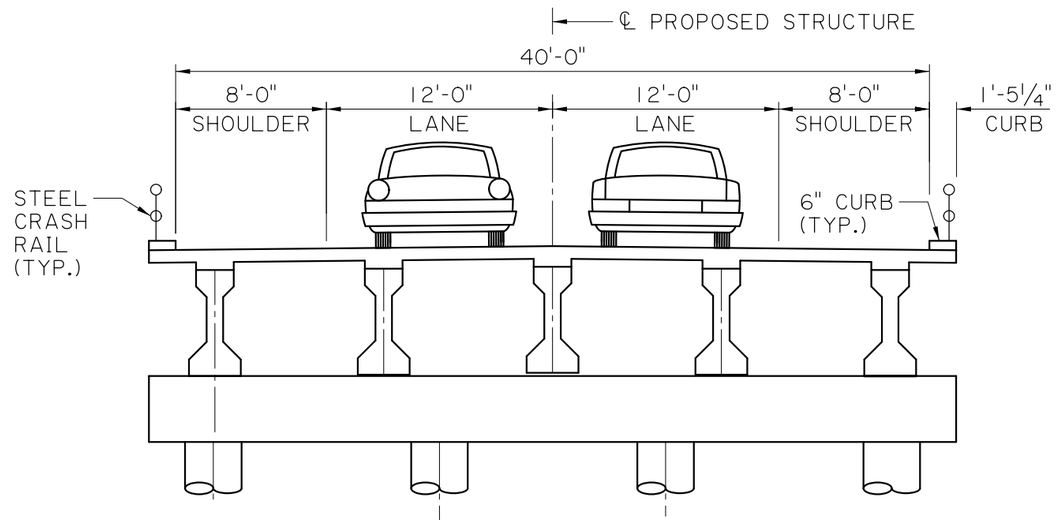

PROPOSED MAIN SPAN
TYPICAL SECTION

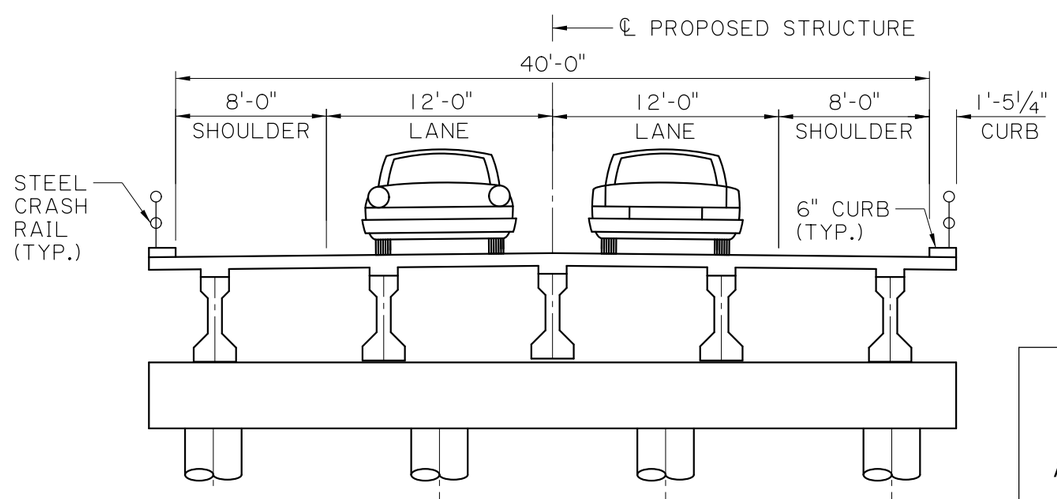

PROPOSED APPROACH SPAN
TYPICAL SECTION

CHECK PRINTS

PRELIMINARY	*Louisiana Department of Transportation and Development*
FOR REVIEW ONLY	*ENGINEER: BRADLEY MISTICH* *LICENSE #: 41996* *DATE: 8/2/2018*

CHECK PRINTS

R:\Gang9_Users\00271113 Jennifer Prestridge\Projects\For Bradley\H.000425 Alternatives\H.000425 Alternatives.dgn 8/2/2018 06:2

SHEET NUMBER

PARISH: CALCASIEU
CONTROL SECTION: 012-01
STATE PROJECT: H.000425

DESIGNED / CHECKED
DETAILED / CHECKED
REVIEWED / SERIES #

NO. | DATE | REVISION OR CHANGE ORDER DESCRIPTION | BY

ALTERNATIVE 4

LA-12: SABINE RIVER BRIDGE

DOTD BRIDGE DESIGN

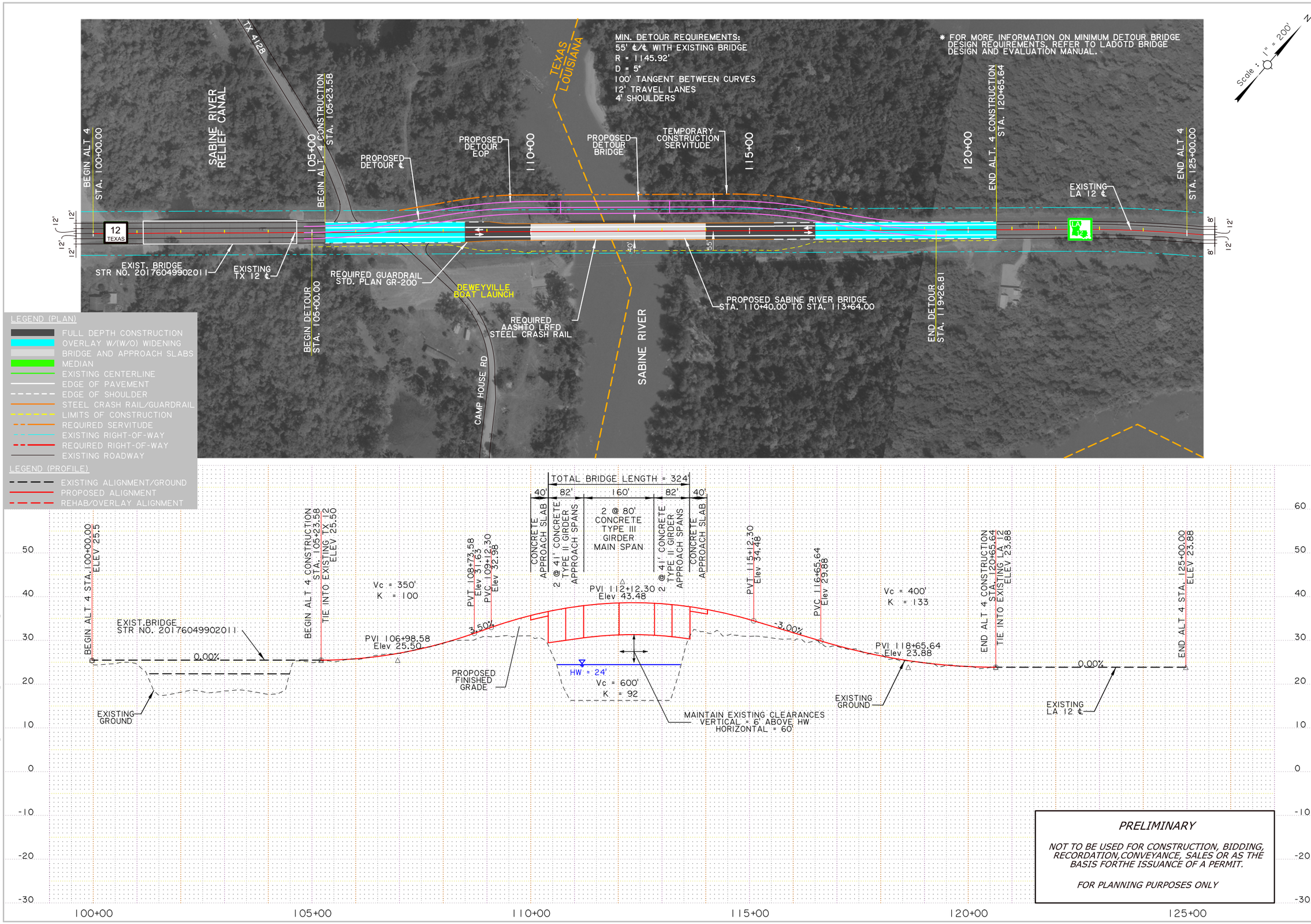

PRELIMINARY

NOT TO BE USED FOR CONSTRUCTION, BIDDING, RECORDATION, CONVEYANCE, SALES OR AS THE BASIS FOR THE ISSUANCE OF A PERMIT.

FOR PLANNING PURPOSES ONLY

SHEET NUMBER 5a

PARISH CALCASIEU

CONTROL SECTION 012-01,012-02,499-01,499-02

STATE PROJECT H.000425.1

DESIGNED JB CHECKED MB

DETAILED JB CHECKED SP

SERIES NUMBER 1 OF 1

REVISION OR CHANGE ORDER DESCRIPTION

NO. DATE BY

ALTERNATIVE 4
REPLACEMENT ALTERNATIVE

LA 12 SABINE RIVER BRIDGE

BUCHART HORN

PRELIMINARY

10/24/2016 12:18:19

J:\PROJ\81047-02\CADD\CADDesign\Roadway\Sheet05a.dgn

ALTERNATIVE 5

CONSTRUCT NEW BRIDGE ON NEW ALIGNMENT

PRELIMINARY
NOT TO BE USED FOR CONSTRUCTION, BIDDING, RECORDATION, CONVEYANCE, SALES OR AS THE BASIS FOR THE ISSUANCE OF A PERMIT.
FOR PLANNING PURPOSES ONLY.

SHEET NUMBER

PARISH: CALCASIEU

FEDERAL PROJECT

STATE PROJECT: H.000425.1

DESIGNED
CHECKED
DETAILED
CHECKED
DATE
SHEET

NO.	DATE	REVISION DESCRIPTION	BY

LA 12 BRIDGE RE-ALIGNMENT

LA 12 SABINE RIVER BRIDGE

BUCHART HORN, INC.

PRELIMINARY
NOT TO BE USED FOR CONSTRUCTION, BIDDING, RECORDATION, CONVEYANCE, SALES OR AS THE BASIS FOR THE ISSUANCE OF A PERMIT.
FOR PLANNING PURPOSES ONLY.

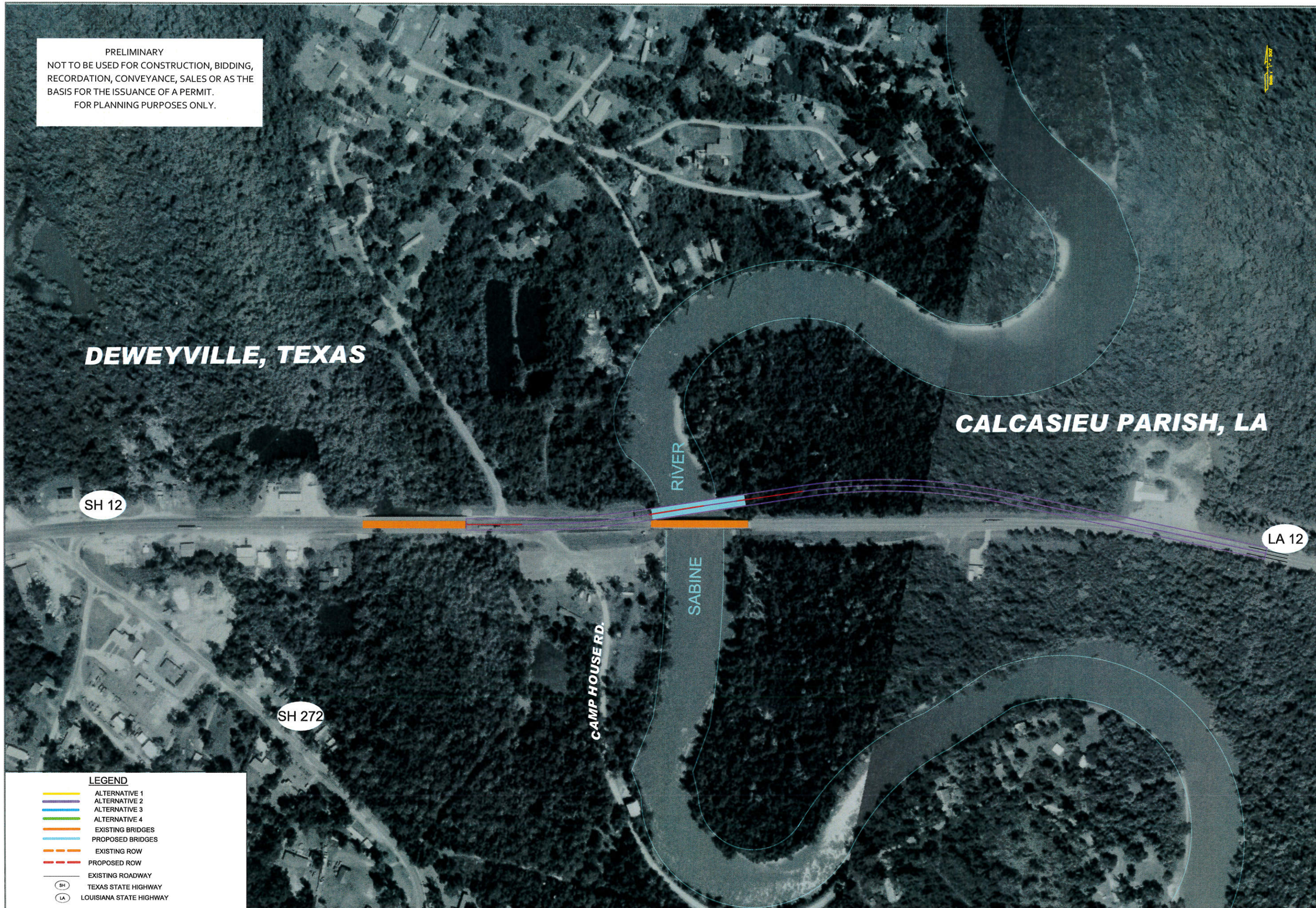

SHEET NUMBER

PARISH: CALCASIEU

FEDERAL PROJECT

STATE PROJECT: H.000425.1

DESIGNED
CHECKED
DETAILED
CHECKED
DATE
SHEET

NO.	DATE	REVISION DESCRIPTION	BY

LA 12 BRIDGE RE-ALIGNMENT

LA 12 SABINE RIVER BRIDGE

BUCHART HORN, INC.