AMENDMENT

State Project No. H.000758.2
Federal Project No. DE-3010 (503)
Widening of US 84 from Hwy 772 to Just East of Hair Creek Bridge
Route US 84
LaSalle Parish, LA

Prepared for:
Louisiana Department of Transportation and Development
Federal Highway Administration

Prepared by:
C.H. Fenstermaker and Associates, LLC
445 North Boulevard, Suite 601
Baton Rouge, LA 70802

MARCH 2015

State Project No. H.000758.2
Federal Project No. DE-3010(503)
Widening of US 84 from Hwy 772 to Just East of Hair Creek Bridge
Route US 84
LaSalle Parish

AMENDMENT TO ENVIRONMENTAL ASSESSMENT (EA) WITH FINDING OF NO SIGNIFICANT IMPACT (FONSI)

The Final EA for the above captioned project was made available on December 17, 2014. Revisions from October 2014 to pages in Appendix A were not replaced in the distributed document. We are issuing this amendment to include the correct, revised pages. Please provide this document with the Final EA with FONSI.

The following pages were revised in Appendix A:

Page before Appendix A cover sheet – Addendum to Environmental Assessment (EA)
Alternative 1: Typical Sections
Alternative 1: Plate 3
Alternative 2A: Typical Sections
Alternative 2B: Typical Sections (1 of 2)
Alternative 2B: Typical Sections (2 of 2)
Additional page to follow Alternative 2B: Typical Sections (2 of 2) – Memorandum
Alternative 2B: Plate 1
Alternative 4: Typical Sections (1 of 2)
Alternative 4: Typical Sections (2 of 2)
Additional page to follow Alternative 4: Typical Sections (2 of 2) – Memorandum
Alternative 4: Plate 3

REVISED PAGES TO APPENDIX A

State Project No. H.000758.2
Federal Project No. DE-3010(503)
Widening of US 84 from Hwy 772 to Just East of Hair Creek Bridge
Route US 84
LaSalle Parish

ADDENDUM TO ENVIRONMENTAL ASSESSMENT (EA)

The Draft EA for the captioned project was made available in February 2014 and a public hearing was held on March 26, 2014. The purpose of the hearing was to receive public input on the alternatives and preferred alternative (**Alternative 4**). During the public comment period, many community members expressed concern regarding **Alternative 4**'s impact to four live oak trees on the property of Nolley Memorial United Methodist Church (UMC), just east of the Downtown Couplet portion of the alignment. With guidance from the Federal Highway Administration (FHWA), the Louisiana Department of Transportation and Development (LDOTD) recommended the study team further revise **Alternative 4** to minimize impacts to the live oaks. **Alternatives 4B** and **4C** were presented at an open house format public meeting on July 29, 2014, at Nolley Memorial UMC. LDOTD and the study team have identified **Alternative 4C** as the preferred alternative. Public hearing and public meeting summaries, exhibits, and comments are available in the EA and its appendices.

<u>Environmental Assessment</u>
Section 6.3 of the EA reflects additional right-of-way, engineering, and construction costs for the two alternatives.

<u>Line and Grade Study</u>
The study team has included an addendum in the Line and Grade report to reflect changes along the proposed section in **Alternatives 4B** and **4C**, from approximately Carpenter Street to South 4th Street. LDOTD will further refine the preferred alternative in the Design Phase and continue to work with the Town of Jena through Construction in an effort to minimize impacts to the live oak trees at Nolley Memorial.

<u>Conceptual Stage Relocation Plan</u>
The study team has updated the relocation report to reflect additional right-of-way costs and impacts.

<u>Other Supporting Documents</u>
The following documents were not updated to reflect **Alternatives 4B** and **4C**.

- Wetland Delineation
- Phase I Environmental Site Assessment
- Noise Study and Air Quality Report
- Traffic Study
- Cultural Resource Survey

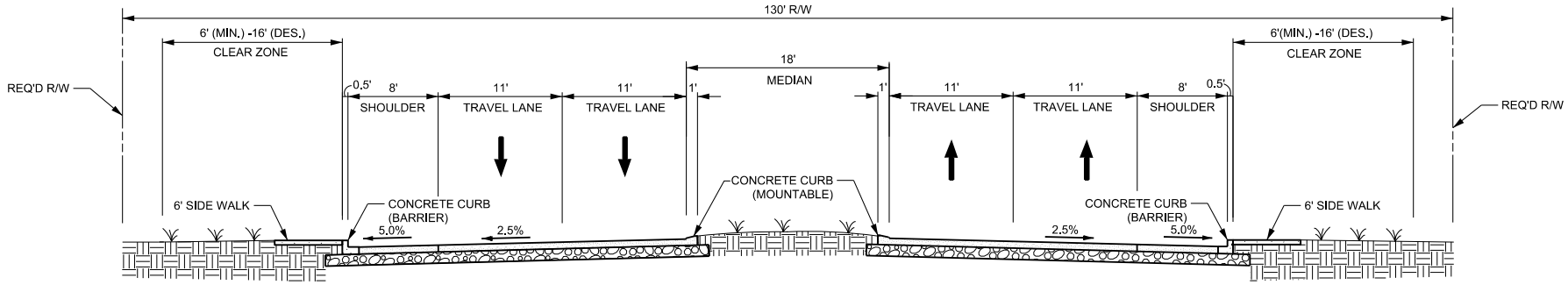

URBAN ARTERIAL (UA-1)
DESIGN SPEED = 40 MPH

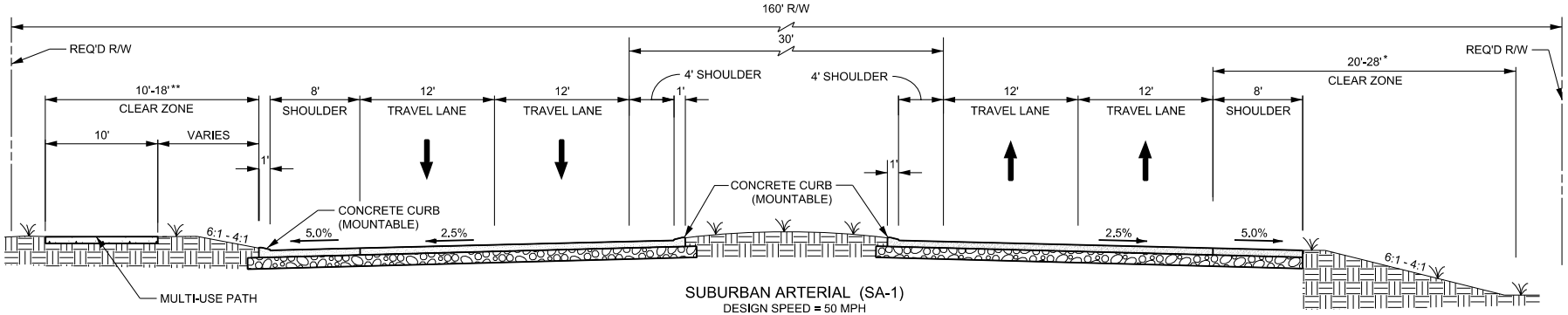

SUBURBAN ARTERIAL (SA-1)
DESIGN SPEED = 50 MPH

*USE 28' WHEN 4:1 FORESLOPES ARE USED
**USE 10' FOR 6:1 FORESLOPES AND 18' FOR 4:1 FORESLOPES

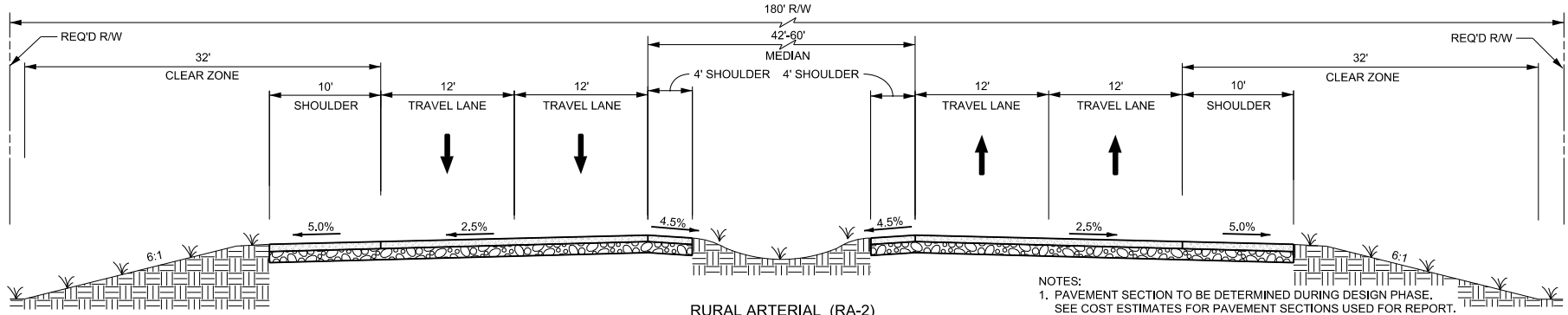

RURAL ARTERIAL (RA-2)
DESIGN SPEED = 60 MPH

NOTES:
1. PAVEMENT SECTION TO BE DETERMINED DURING DESIGN PHASE. SEE COST ESTIMATES FOR PAVEMENT SECTIONS USED FOR REPORT.
2. SEE PROJECT PLATES FOR PAVEMENT OVERLAY LIMITS.
3. SHOULDERS HAVE MAXIMUM GRADE BREAK DIFFERENCE OF 7% FROM TRAVEL LANE.
4. CROSS SLOPE WILL VARY FOR SUPERELEVATION IN HORIZONTAL CURVES. MAXIMUM RATES ARE 4% FOR URBAN AND SUBURBAN ARTERIALS AND 10% FOR RURAL ARTERIALS.

TYPICAL SECTIONS

STATE PROJECT NO. H.000758.2
US 84 WIDENING FROM
HIGHWAY 772 TO EAST OF HAIR CREEK BRIDGE
LASALLE PARISH

ALTERNATIVE 1

PLATE 3

STATE PROJECT NO. H.000758.2
US 84 WIDENING FROM HIGHWAY 772
TO EAST OF HAIR CREEK BRIDGE
LASALLE PARISH

ALTERNATIVE 1

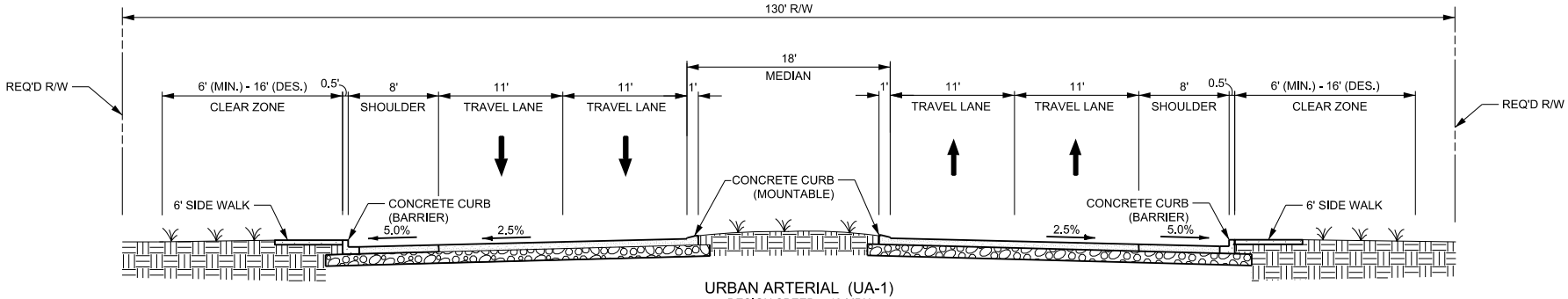

URBAN ARTERIAL (UA-1)
DESIGN SPEED = 40 MPH

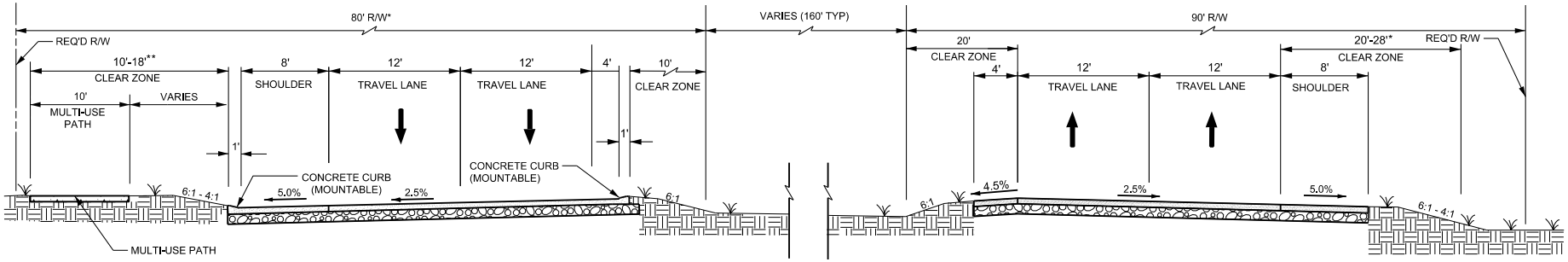

SUBURBAN ARTERIAL (SA-1)
DESIGN SPEED = 50 MPH
(SUBURBAN COUPLET)

*USE 28' WHEN 4:1 FORESLOPES ARE USED
**USE 10' FOR 6:1 FORESLOPES AND 18' FOR 4:1 FORESLOPES

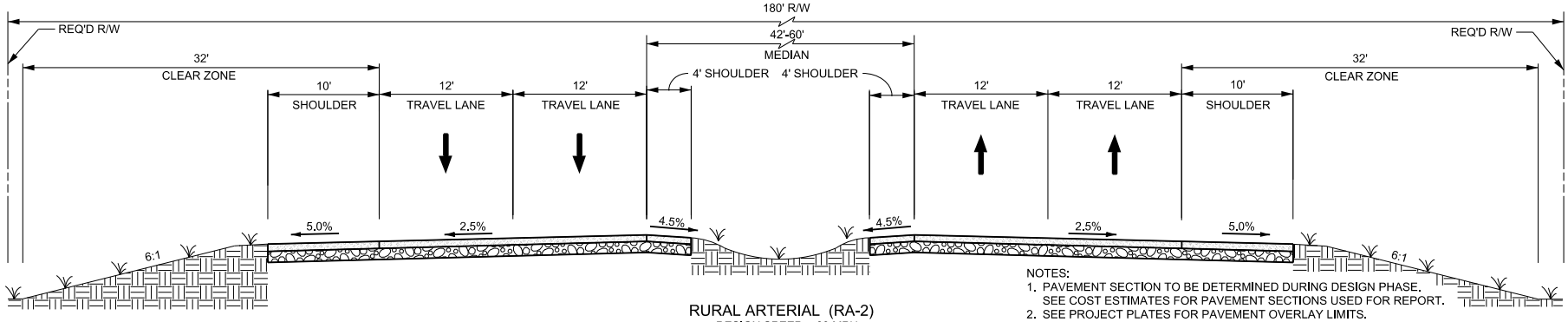

RURAL ARTERIAL (RA-2)
DESIGN SPEED = 60 MPH

NOTES:
1. PAVEMENT SECTION TO BE DETERMINED DURING DESIGN PHASE. SEE COST ESTIMATES FOR PAVEMENT SECTIONS USED FOR REPORT.
2. SEE PROJECT PLATES FOR PAVEMENT OVERLAY LIMITS.
3. SHOULDERS HAVE MAXIMUM GRADE BREAK DIFFERENCE OF 7% FROM TRAVEL LANE.
4. CROSS SLOPE WILL VARY FOR SUPERELEVATION IN HORIZONTAL CURVES. MAXIMUM RATES ARE 4% FOR URBAN AND SUBURBAN ARTERIALS AND 10% FOR RURAL ARTERIALS.

TYPICAL SECTIONS

STATE PROJECT NO. H.000758.2
US 84 WIDENING FROM
HIGHWAY 772 TO EAST OF HAIR CREEK BRIDGE
LASALLE PARISH

ALTERNATIVE 2A

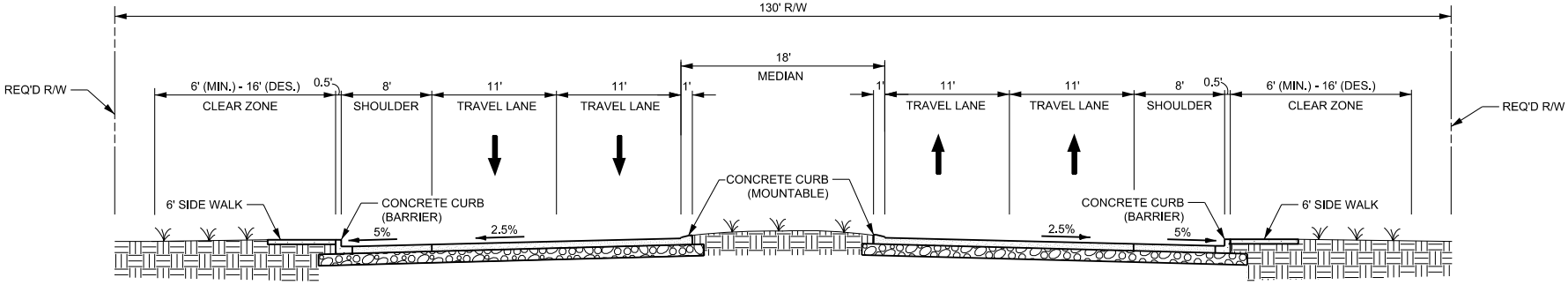

URBAN ARTERIAL (UA-1)
DESIGN SPEED = 40 MPH

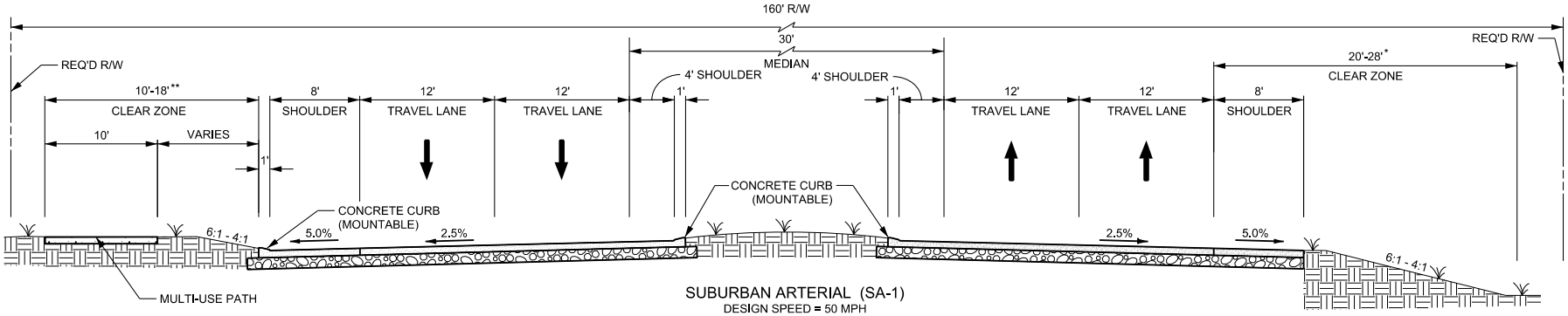

SUBURBAN ARTERIAL (SA-1)
DESIGN SPEED = 50 MPH

*USE 28' WHEN 4:1 FORESLOPES ARE USED
**USE 10' FOR 6:1 FORESLOPES AND 18' FOR 4:1 FORESLOPES

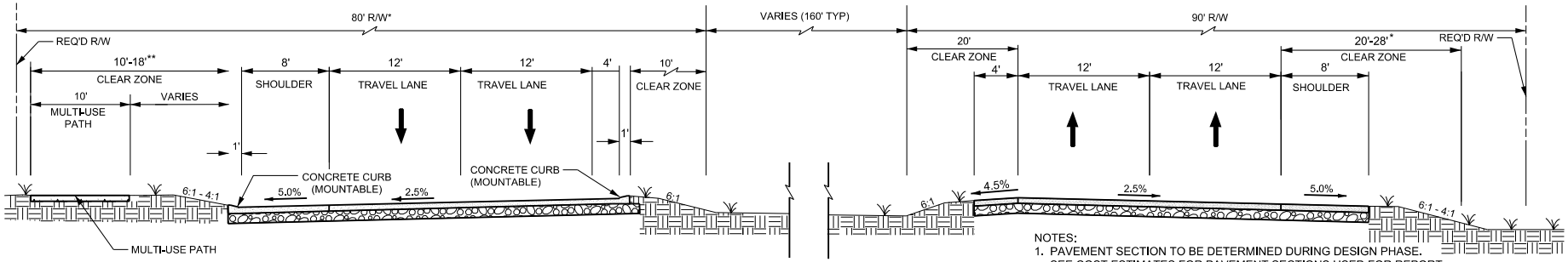

SUBURBAN ARTERIAL (SA-1)
DESIGN SPEED = 50 MPH
(SUBURBAN COUPLET)

NOTES:
1. PAVEMENT SECTION TO BE DETERMINED DURING DESIGN PHASE. SEE COST ESTIMATES FOR PAVEMENT SECTIONS USED FOR REPORT.
2. SEE PROJECT PLATES FOR PAVEMENT OVERLAY LIMITS.
3. SHOULDERS HAVE MAXIMUM GRADE BREAK DIFFERENCE OF 7% FROM TRAVEL LANE.
4. CROSS SLOPE WILL VARY FOR SUPERELEVATION IN HORIZONTAL CURVES. MAXIMUM RATES ARE 4% FOR URBAN AND SUBURBAN ARTERIALS AND 10% FOR RURAL ARTERIALS.

TYPICAL SECTIONS (1 OF 2)

STATE PROJECT NO. H.000758.2
US 84 WIDENING FROM
HIGHWAY 772 TO EAST OF HAIR CREEK BRIDGE
LASALLE PARISH

ALTERNATIVE 2B

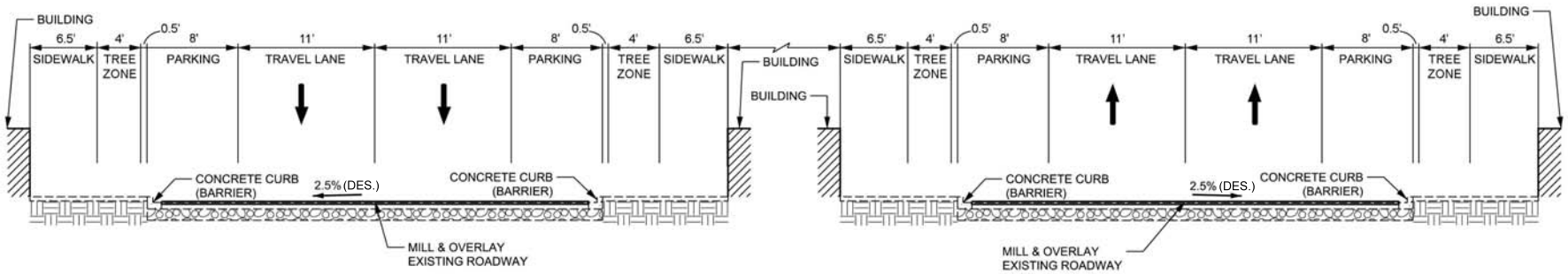

URBAN ARTERIAL (UA-1)
DESIGN SPEED = 40 MPH
(DOWNTOWN COUPLET) *

* THE DOWNTOWN COUPLET TYPICAL SECTION IS BASED ON THE JENA VISION DOCUMENT. AS BUILT PLANS FROM DISTRICT 58 WERE USED FOR TYPICAL SECTION DIMENSIONS. SEE MEMORANDUM FOLLOWING THIS SHEET.

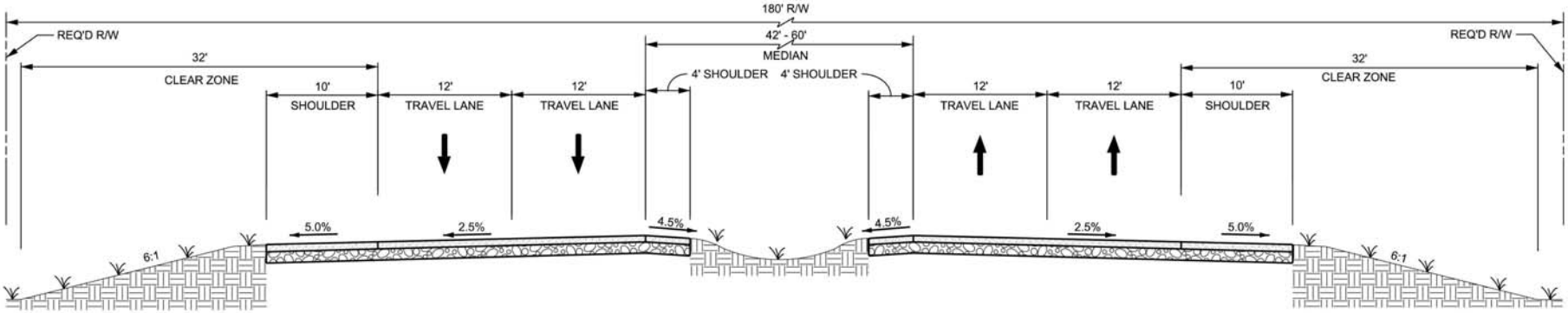

RURAL ARTERIAL (RA-2)
DESIGN SPEED = 60 MPH

NOTES:
1. PAVEMENT SECTION TO BE DETERMINED DURING DESIGN PHASE. SEE COST ESTIMATES FOR PAVEMENT SECTIONS USED FOR REPORT.
2. SEE PROJECT PLATES FOR PAVEMENT OVERLAY LIMITS.
3. SHOULDERS HAVE MAXIMUM GRADE BREAK DIFFERENCE OF 7% FROM TRAVEL LANE.
4. CROSS SLOPE WILL VARY FOR SUPERELEVATION IN HORIZONTAL CURVES. MAXIMUM RATES ARE 4% FOR URBAN AND SUBURBAN ARTERIALS AND 10% FOR RURAL ARTERIALS.

TYPICAL SECTIONS (2 OF 2)

STATE PROJECT NO. H.000758.2
US 84 WIDENING FROM
HIGHWAY 772 TO EAST OF HAIR CREEK BRIDGE
LASALLE PARISH

ALTERNATIVE 2B

MEMORANDUM		
SPN NO. H.000758.2	PROJECT: US 84 WIDENING	DATE: JUNE 19, 2014
FAP NO. DE 3010 (503)	PARISH: LASALLE	ROUTE: US HWY 84

TO: Mayor Murphy McMillin
Town of Jena

FROM: Mikeila Nagura
C.H. Fenstermaker & Associates, LLC

SUBJECT: **Downtown Jena Couplet, Parking, and Bike Lanes**

SUMMARY

The proposed alignment of the Downtown Couplet in the Jena Vision document includes two 8-foot parallel parking lanes and two 10-foot one-way travel lanes. The alignment of the Downtown Couplet in Alternatives 2b and 4 include one 12-foot parking/bike lane and two 12-foot travel lanes. The inconsistency between the Jena Vision typical section and Alternative 2b and 4 typical sections was brought to the attention of DOTD and its consultant Fenstermaker at the public hearing held on March 26, 2014.

Fenstermaker consulted with DOTD – Nicholas Olivier and Ronald Broadbent – regarding the Downtown Couplet section and it was agreed at the Public Hearing that the typical section with two parking lanes, two travel lanes, and no bike lane through downtown Jena will remain as in the Jena Vision typical section.

ACTION

- Fenstermaker will revise the appropriate Alternative 2b and 4 plates using As-Built CADD drawings from District 58 Administrator Ken Mason.
- Fenstermaker will revise the appropriate Alternative 2b and 4 narratives in the Environmental Assessment and Line and Grade documents to reflect the change.

Prepared by: Mikeila Nagura, Deputy Project Manager

cc: Fenstermaker Project File 2108953.00C
Dax Douet, Project Manager – Fenstermaker
Ronald Broadbent, Project Manager – DOTD
Robert Lott, Assistant Environmental Engineer – DOTD
Ezekiel Onyegbunam, Project Manager – DOTD

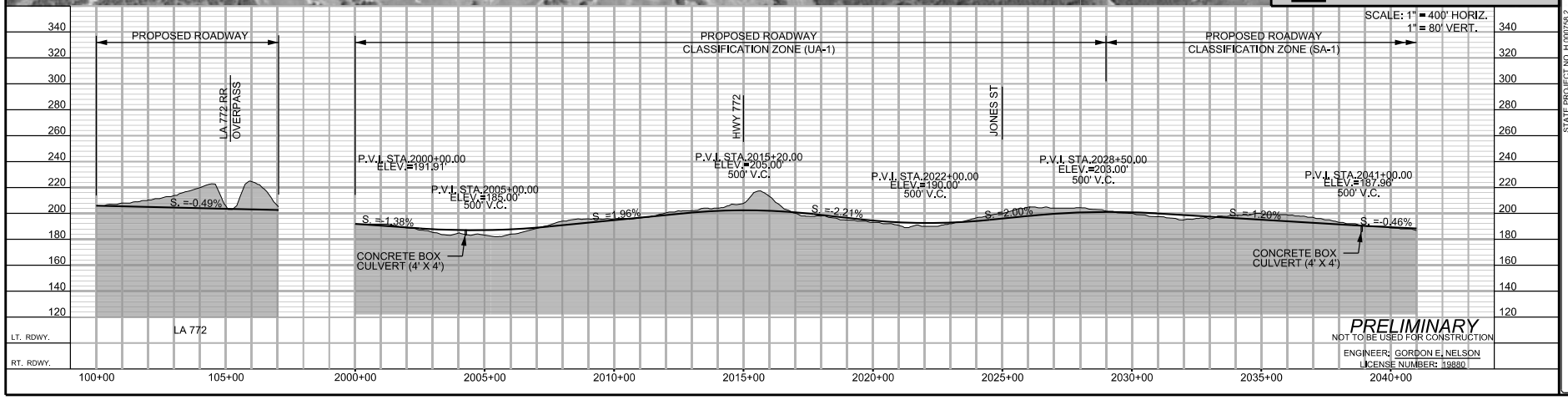

PLATE 1

STATE PROJECT NO. H.000798.2
US 84 WIDENING FROM HIGHWAY 772
TO EAST OF HAIRCREEK BRIDGE
LASALLE PARISH

ALTERNATIVE 2B

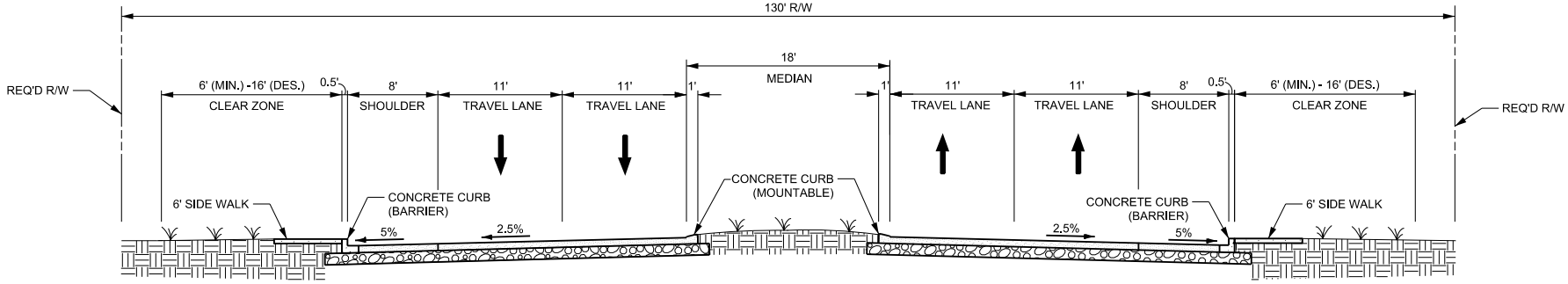

URBAN ARTERIAL (UA-1)
DESIGN SPEED = 40 MPH

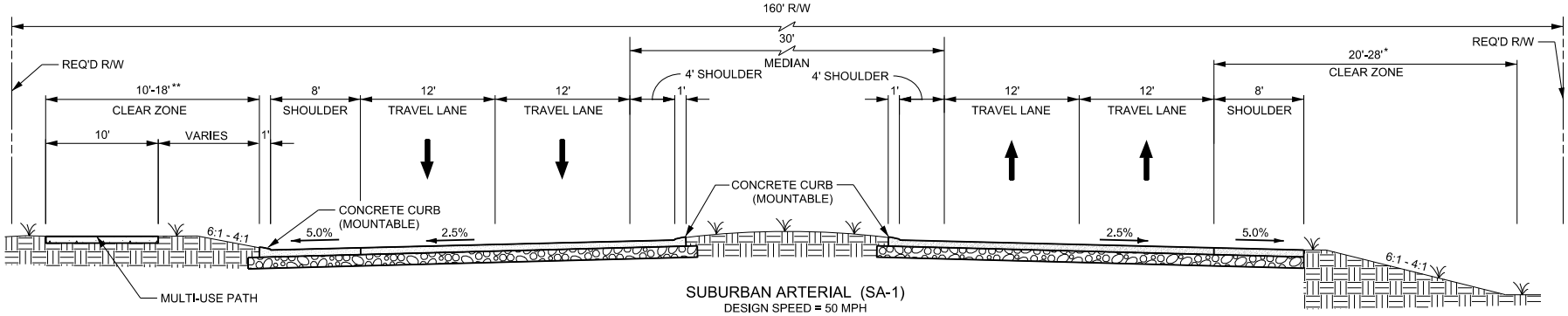

SUBURBAN ARTERIAL (SA-1)
DESIGN SPEED = 50 MPH

*USE 28' WHEN 4:1 FORESLOPES ARE USED
**USE 10' FOR 6:1 FORESLOPES AND 18' FOR 4:1 FORESLOPES

NOTES:
1. PAVEMENT SECTION TO BE DETERMINED DURING DESIGN PHASE.
   SEE COST ESTIMATES FOR PAVEMENT SECTIONS USED FOR REPORT.
2. SEE PROJECT PLATES FOR PAVEMENT OVERLAY LIMITS.
3. SHOULDERS HAVE MAXIMUM GRADE BREAK DIFFERENCE OF 7% FROM TRAVEL LANE.
4. CROSS SLOPE WILL VARY FOR SUPERELEVATION IN HORIZONTAL CURVES. MAXIMUM RATES ARE 4% FOR URBAN AND SUBURBAN ARTERIALS AND 10% FOR RURAL ARTERIALS.

TYPICAL SECTIONS (1 OF 2)

STATE PROJECT NO. H.000758.2
US 84 WIDENING FROM
HIGHWAY 772 TO EAST OF HAIR CREEK BRIDGE
LASALLE PARISH

ALTERNATIVE 4

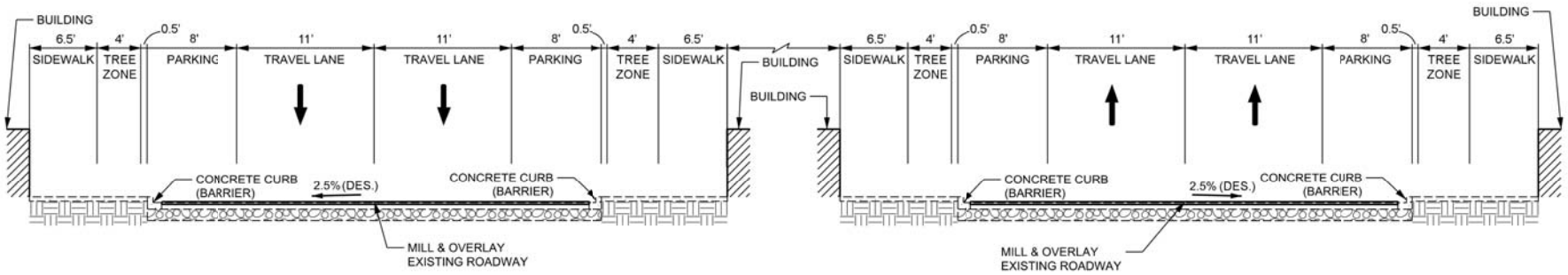

URBAN ARTERIAL (UA-1)
DESIGN SPEED = 40 MPH
(DOWNTOWN COUPLET) *

* THE DOWNTOWN COUPLET TYPICAL SECTION IS BASED ON THE JENA VISION DOCUMENT. AS BUILT PLANS FROM DISTRICT 58 WERE USED FOR TYPICAL SECTION DIMENSIONS. SEE MEMORANDUM FOLLOWING THIS SHEET.

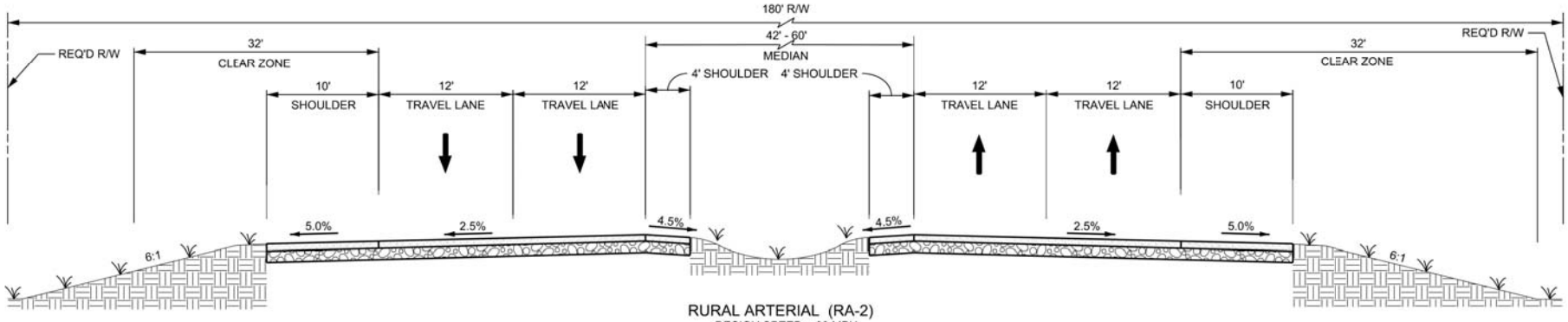

RURAL ARTERIAL (RA-2)
DESIGN SPEED = 60 MPH

NOTES:
1. PAVEMENT SECTION TO BE DETERMINED DURING DESIGN PHASE. SEE COST ESTIMATES FOR PAVEMENT SECTIONS USED FOR REPORT.
2. SEE PROJECT PLATES FOR PAVEMENT OVERLAY LIMITS.
3. SHOULDERS HAVE MAXIMUM GRADE BREAK DIFFERENCE OF 7% FROM TRAVEL LANE.
4. CROSS SLOPE WILL VARY FOR SUPERELEVATION IN HORIZONTAL CURVES. MAXIMUM RATES ARE 4% FOR URBAN AND SUBURBAN ARTERIALS AND 10% FOR RURAL ARTERIALS.

TYPICAL SECTIONS (2 OF 2)

STATE PROJECT NO. H.000758.2
US 84 WIDENING FROM
HIGHWAY 772 TO EAST OF HAIR CREEK BRIDGE
LASALLE PARISH

ALTERNATIVE 4

MEMORANDUM		
SPN NO. H.000758.2	PROJECT: US 84 WIDENING	DATE: JUNE 19, 2014
FAP NO. DE 3010 (503)	PARISH: LASALLE	ROUTE: US HWY 84

TO: Mayor Murphy McMillin
Town of Jena

FROM: Mikeila Nagura
C.H. Fenstermaker & Associates, LLC

SUBJECT: **Downtown Jena Couplet, Parking, and Bike Lanes**

SUMMARY

The proposed alignment of the Downtown Couplet in the Jena Vision document includes two 8-foot parallel parking lanes and two 10-foot one-way travel lanes. The alignment of the Downtown Couplet in Alternatives 2b and 4 include one 12-foot parking/bike lane and two 12-foot travel lanes. The inconsistency between the Jena Vision typical section and Alternative 2b and 4 typical sections was brought to the attention of DOTD and its consultant Fenstermaker at the public hearing held on March 26, 2014.

Fenstermaker consulted with DOTD – Nicholas Olivier and Ronald Broadbent – regarding the Downtown Couplet section and it was agreed at the Public Hearing that the typical section with two parking lanes, two travel lanes, and no bike lane through downtown Jena will remain as in the Jena Vision typical section.

ACTION

- Fenstermaker will revise the appropriate Alternative 2b and 4 plates using As-Built CADD drawings from District 58 Administrator Ken Mason.
- Fenstermaker will revise the appropriate Alternative 2b and 4 narratives in the Environmental Assessment and Line and Grade documents to reflect the change.

Prepared by: Mikeila Nagura, Deputy Project Manager

cc: Fenstermaker Project File 2108953.00C
Dax Douet, Project Manager – Fenstermaker
Ronald Broadbent, Project Manager – DOTD
Robert Lott, Assistant Environmental Engineer – DOTD
Ezekiel Onyegbunam, Project Manager – DOTD

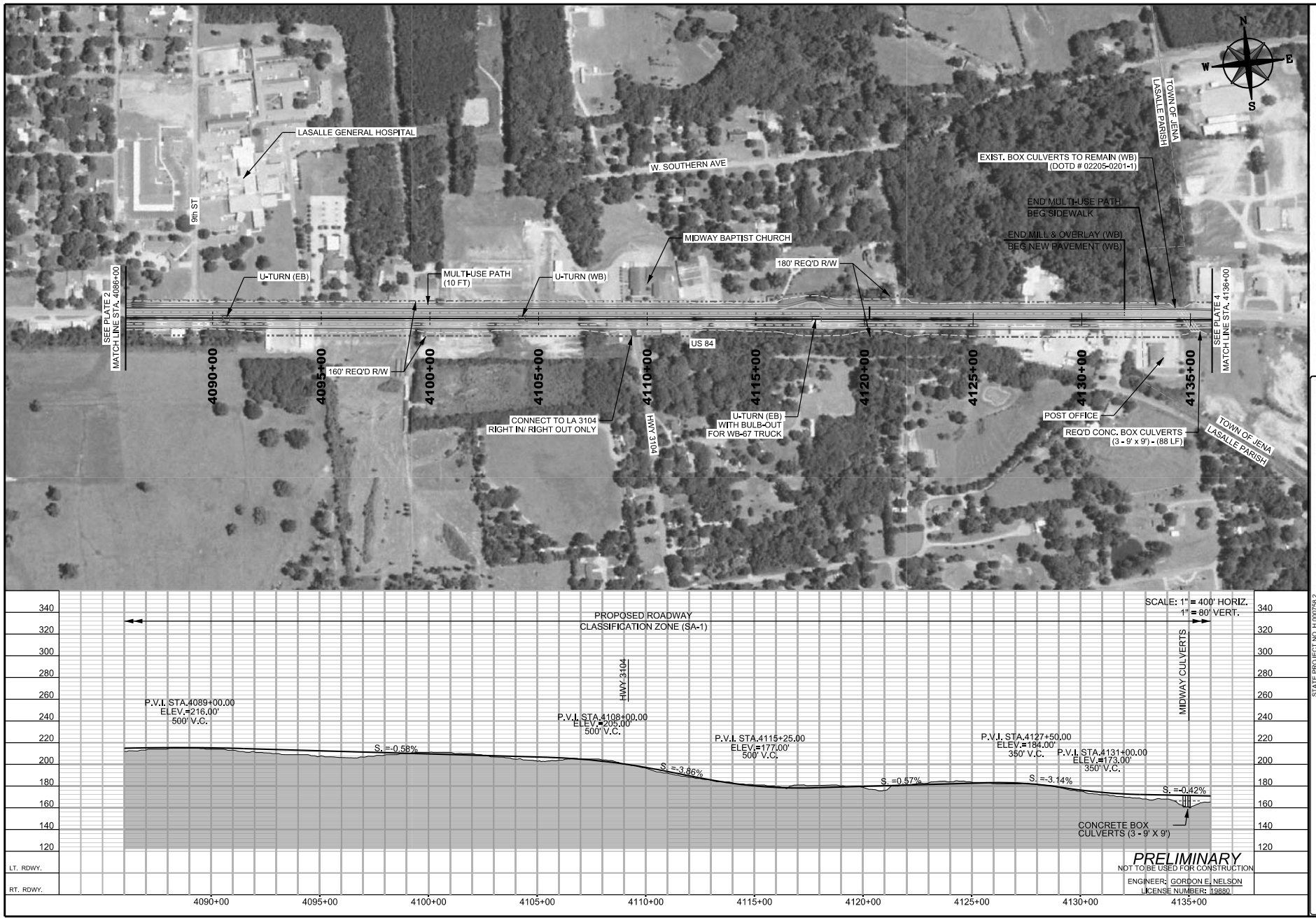

PLATE 3

STATE PROJECT NO. H.000758.2
US 84 WIDENING FROM HIGHWAY 772
TO EAST OF HAIR CREEK BRIDGE
LASALLE PARISH

ALTERNATIVE 4