Environmental Assessment and Finding of No Significant Impacts

July 2015

Red River Bridge at Jimmie Davis Highway
Route LA 511
Bossier and Caddo Parishes
State Project No. H.001779
Federal Aid Project No. STP-0800(507)

Prepared For:
LOUISIANA DEPARTMENT OF TRANSPORTATION AND DEVELOPMENT

RED RIVER BRIDGE AT JIMMIE DAVIS HIGHWAY
ROUTE LA 511 BOSSIER AND CADDO PARISHES

Environmental Assessment

and

Finding of No Significant Impact

Prepared for:

LOUISIANA DEPARTMENT OF TRANSPORTATION AND DEVELOPMENT

JULY 2015

Prepared July 15, 2015

Page Left Intentionally Blank

FEDERAL HIGHWAY ADMINISTRATION

FINDING OF NO SIGNIFICANT IMPACT

FOR

STATE PROJECT NO H.001779.2

F.A.P. NO H001779

RED RIVER BRIDGE at JIMMIE DAVIS HIGHWAY

ROUTE: LA 511

BOSSIER and CADDO PARISHES

The FHWA has determined that this project will not have any significant impact on the human environment. This Finding of No Significant Impact (FONSI) is based on the Environmental Assessment which has been independently evaluated by the FHWA and determined to adequately and accurately discuss the environmental issues and impacts of the proposed project. It provides sufficient evidence and analysis for determining that an environmental impact statement is not required.

REVIEWED AND RECOMMENDED FOR
APPROVAL Timothy Gallai
DATE 7/22/15

REVIEWED AND RECOMMENDED FOR
APPROVAL R Mahoney
DATE 7-8-15

APPROVED
Carl M. Highsmith
CARL M. HIGHSMITH
PROJECT DELIVERY TEAM LEADER
FEDERAL HIGHWAY ADMINISTRATION
DATE 7-23-15

ENVIRONMENTAL DETERMINATION CHECKLIST

ENVIRONMENTAL DETERMINATION CHECKLIST

State Project No. H.001779
Federal Aid Project No. STP-0800(507)
Name: Red River Bridge at Jimmie Davis Highway Improvements
Route: LA 511
Parish: Bossier and Caddo Parishes

1. General Information

Status:				
	( )	Conceptual Layout	( )	Plan-in-Hand
	(X)	Line and Grade	( )	Preliminary Plans
	( )	Survey	( )	Final Design

2. Class of Action

( ) Environmental Impact Statement (EIS)
(X) Environmental Assessment (EA)
( ) Categorical Exclusion (CE)
( ) Programmatic CE (as defined in letter of agreement dated 03/15/95, does not require FHWA approval)

3. Project Description (use attachment if necessary)

The proposed project, to increase capacity in the LA 511 corridor across the Red River will extend along LA 511 from East Dixie Meadow Road in the City of Shreveport, Caddo Parish, to Barksdale Boulevard (US 71) in the City of Bossier City, Bossier Parish. Except for the existing Jimmie Davis Bridge, which is a two lane roadway without shoulders, LA 511 is a five-lane principal arterial. In addition to increasing capacity, the project will provide improvements to LA 511 within the corridor and provide a proposed shared use trail on both sides of the river primarily through the existing rights-of-way of the Clyde Fant Parkway on the west and the Arthur Ray Teague Parkway on the east to join the existing trails that it is intended to link.

4. Public Involvement

(X) Views were solicited on June 17, 2013. Responses are included in Appendix B.
(X) No adverse comments were received.
( ) Comments are addressed in attachment.
( ) Views were not solicited.
( ) A Public Hearing (P/H)/Opportunity is not required.
( ) An opportunity for requesting a P/H will be afforded upon your concurrence.
( ) Opportunity was afforded, with no requests for P/H.
(X) A Public Hearing was held on May 14, 2015.
(X) A Public Meeting was held on August 15, 2013.

5. Real Estate (If yes, use attachment)		No	Yes
a.	Will additional right-of-way be required? See Section 3.3	( )	(X)
b.	Will any relocations be required? See Section 3.3	( )	(X)
c.	Are construction or drainage servitudes required?	(X)	( )
d.	Will right-of-way be required from a Wetland Reserve Program (WRP) property?	(X)	( )

6. Cultural and 106 Impacts (If yes, use attachment)		No	Yes
a.	**Section 4(f) or 6(f) lands** Are any impacted by the project? (if so, list below) Are any adjacent to the project? (If so, list below) Jimmie Davis Bridge Red River Waterway Commission Recreational Facilities (Arthur Ray Teague Jogging Trail) Red River Bicycle Trail Charles and Marie Hamel Memorial Park	 (X) ( )	 ( ) (X)
b.	**Known Historic sites/structures (NRHP eligibility to be determined)** Are any impacted by the project? (If so, list below) Are any adjacent to the project? (If so, list below)	 (X) ( )	 ( ) (X)
c.	**Known Archaeological sites (To be determined following survey)** Are any impacted by the project? (If so, list below) Are any adjacent to the project? (If so, list below)	 (X) (X)	 ( ) ( )
d.	**Cemeteries** Are any impacted by the project? (if so, list below) Are any adjacent to the project? (If so, list below)	 (X) (X)	 ( ) ( )
e.	**Historic Bridges** Jimmie Davis Bridge	( )	(X)
7. Wetlands (Attach wetlands finding, if applicable)		**No**	**Yes**
a.	Are wetlands being affected?	( )	(X)
b.	Are other waters of the U.S. being affected?	( )	(X)
c.	Can C.O.E. Nationwide Permit be used?	( )	(X)
8. Natural Environment (use attachment if necessary)		**No**	**Yes**

a.	Endangered/Threatened Species/Habitat	( )	(X)
b.	Within 100 Year Floodplain?	( )	(X)
	Is project a significant encroachment in Floodplain?	( )	(X)
c.	In Coastal Zone Management Area?	(X)	( )
	Is the project consistent with the Coastal Management Program?	( )	(X)
	Will a Coastal Use Permit be required?	(X)	( )
d.	Coastal Barrier Island (Grand Isle only)	(X)	( )
e.	Farmlands (use form AD 1006 if necessary)	(X)	( )
f.	Is project on Sole Source Aquifer?	(X)	( )
	Is coordination with EPA necessary?	(X)	( )
g.	Natural & Scenic Stream Permit required	(X)	( )
h.	Is project impacting a waterway?	( )	(X)
	Has navigability determination been made?	( )	(X)
	Will a U.S. Coast Guard permit or amended permit be required?	( )	(X)

9. Physical Impacts (use attachment if necessary)		**No**	**Yes**
a.	Is a noise analysis warranted (Type I project)	( )	(X)
	Are there noise impacts based on violation of the (NAC)?	( )	(X)
	Are there noise impacts based on the 10 dBA increase?	(X)	( )
	Are noise abatement measures reasonable and feasible?	(X)	( )
b.	Is an air quality study warranted?	( )	(X)
	Do project level air quality levels exceed the NAAQS for CO?	(X)	( )
c.	Is project in a non-attainment area for Carbon monoxide (CO), Ozone (O_3), Nitrogen dioxide (NO_2), or Particulates (PM-10)?	(X)	( )
d.	Is project in an approved Transportation Plan, Transportation Improvement Program (TIP) and State Transportation Improvement Program (STIP)?	( )	(X)
e.	Are construction air, noise, & water impacts major?	(X)	( )
f.	Are there any known waste sites or USTs?	(X)	( )
	Will these sites be tested prior to purchase of right-of-way?	(X)	( )

10. Social Impacts (use attachment if necessary)		**No**	**Yes**
a.	**Land use changes**	(X)	( )
b.	**Churches and Schools**		
	Are any impacted by the project? (If so, list below)	(X)	( )
	Are any adjacent to the project? (If so, list below)	( )	(X)
	Riverpark Church		
	Barksdale Baptist Church		
c.	**Title VI Considerations**	(X)	( )

d.	**Will any specific groups be adversely affected (i.e., minorities, low-income, elderly, disabled, etc.)?**	(X)	( )
e.	**Hospitals, medical facilities, fire police** Are any impacted by the project? (If so, list below Are any adjacent to the project? (If so, list below) Cornerstone Hospital	 (X) ( )	 ( ) (X)
f.	**Transportation pattern changes**	(X)	( )
g.	**Community cohesion**	(X)	( )
h.	**Are short-term social/economic impacts due to construction considered major?**	(X)	( )
i.	**Do conditions warrant special construction times (i.e., school in session, congestion, tourist season, harvest)?**	(X)	( )
j.	**Were Context Sensitive Solutions considered?** (If so, explain below) If a Build Alternative is selected, context sensitive design will be employed during final design to make the new structure aesthetically pleasing and compatible with the existing Red River viewshed; the color, light standards, and other street furniture will be selected to be compatible with the similar elements selected for the rehabilitation of the existing bridge.	( )	(X)
k.	**Will the roadway/bridge be closed**? (If yes, answer questions below) Will a detour bridge be provided? Will a detour route be signed?	(X) (X) (X)	( ) ( ) ( )
11. Other			

Preparer: AECOM Technical Services, Inc.
Date: February 2015, revised June 2015

Attachments

(X) S.O.V. and Responses (Appendix B)
(X) Project Description Sheet (Chapter 1.0)
(X) Traffic Study Report, December 2012 (Stand-alone document)
(X) Exhibits and/or Maps (included in EA Document)
(X) Map Atlas (Chapter 2.0)
(X) Standing Structures Survey, July 2014 (Phase I Cultural Resources Survey, Stand-alone document)
(X) Public Meeting Information, August 2013 Public Meeting Record (Appendix C)
(X) Public Hearing Record / Transcript, May 14, 2015 Public Hearing Record (Separate Document)
(X) Archaeological Survey, July 2014 (Phase I Cultural Resources Survey, Stand-alone document). A letter received from the State Historic Preservation Office (SHPO) dated October 13, 2014, noted that the proposed Red River Bridge at Jimmie Davis Highway project would have no adverse effect. (Appendix D)

EXECUTIVE SUMMARY

ES.0 EXECUTIVE SUMMARY

ES.1 Proposed Project

The Department of Transportation and Development (DOTD) is proposing additional capacity to the existing two lane bridge across the Red River at LA 511, a full interchange between LA 511 and the Arthur Ray Teague Parkway, and a shared use trail connecting the existing trails on each side of the river. LA 511 will be upgraded to complement the Preferred Alternative for the bridge. The No-Build Alternative, two Bridge Build Alternatives, and three Access Build Alternatives were evaluated as part of this Environmental Assessment (EA). An overview of the alternatives analysis process and a detailed description of the Build Alternatives are found in Chapter 2.0. Figure ES-1 shows the study and project areas. The study area represents the area within which the elements of the natural environment and cultural resources were investigated, while the project area more broadly describes the area within which the built and natural characteristics were considered. A Summary of Permits and Certifications and a Summary of Commitments and Measures for Avoidance, Minimization, and Mitigation are found at the end of this Executive Summary.

ES.2 Purpose and Need

The purpose of the proposed action, which has been approved by the Federal Highway Administration (FHWA), is

- to increase the vehicle capacity of the crossing of the Red River at Jimmie Davis Highway (LA 511) in order to provide at least a level of service (LOS) C;
- to provide a safe river crossing for bicycles and pedestrian traffic; and
- to replace, or extend the life of, an aging bridge structure.

Need for Relief of Traffic Congestion

- The 2013 Average Daily Traffic (ADT) of 27,955 vehicles using the existing 2-lane bridge is expected to increase to 36,780 by 2036.
- In 2013 there is a LOS F in both directions during the AM peak and LOS E in both directions during the PM peak. With no additional capacity, there will be LOS F in both directions at both peaks in 2036. To provide a minimum LOS of C, two lanes in each direction are necessary.
- In 2013 the signalized intersection of Jimmie Davis Highway and CenturyLink Center Drive / Zach Avenue at the bottom of a five percent grade on the east bridge approach has a LOS C. In 2036 it is projected to have an LOS of D. The existing bridge creates a capacity constraint on the LA 511 corridor because it is a two lane link in what is otherwise a 5-lane roadway extending 5.35 miles between LA 523 and Barksdale Boulevard (US 71).

Need for Bicycle and Pedestrian Crossing

As indicated in regional and local plans, the community supports a connection between the Red River Bicycle Trail in Shreveport and the Arthur Ray Teague Jogging Trail in Bossier City, which terminate on either side of the Red River in the vicinity of LA 511. Currently, there is no provision for bicycles or pedestrians to cross the river at this location.

- The *Northwest Louisiana Long Range Transportation Plan Update 2009-2030* prepared by the Northwest Louisiana Council of Governments (NLCOG) includes the project engineering in the Short Range Program (FY 2013-2015) and the project construction in the Long Range Program (FY 2016 – 2030). The project is described as LA 511 (Jimmie Davis

Highway) Red River crossing - New 4-lane bridge structure with Bicycle Pedestrian facilities.

- The *Bossier City Comprehensive Plan (2002)* states: Throughout the public involvement process, several recommendations were made for additional pedestrian facilities including:
  - Pedestrian crossing over the Red River
  - Connect a bike trail over to Shreveport: Jimmie Davis Bridge
- The *Shreveport-Caddo 2030 Master Plan (2010)* states: A safe and attractive pedestrian and bicycling network integrated with vehicle transportation.
  - Support a "Complete Streets" policy that provides roadway space for bicycles, pedestrians, automobiles and transit vehicles and integrates greenway and off-road bicycle routes with the roadway system.
  - Integrate pedestrian networks and bikeways into the development of public spaces and link community destinations through on and off-street facilities.

Need for Improved Safety

Structural:

The existing bridge is 45 years old and is showing signs of aging, including corrosion of steel members, erosion of the embankment, and cracks and spalling to the abutment walls and the deck.

Operating:

The existing 2-lane bridge does not have shoulders, sidewalks, or bicycle lanes.

Need for Access Improvements to Traffic Generators and Transportation Facilities

The location of the CenturyLink Center near the east approach of the bridge and the following recently completed and future projects are anticipated to increase traffic demand at the eastern approach.

Recent roadway improvements include construction of a 5-lane section along LA 511 from the bridge to Barksdale Boulevard (US 71), an extension of the 4-lane Arthur Ray Teague Parkway to the intersection of Barksdale Boulevard (US 71) and Sligo Road (LA 612), and exit ramps from both eastbound and westbound Jimmie Davis Highway to the Arthur Ray Teague Parkway.

ES.3 Alternatives Development Methodology

A tiered approach was utilized in the development of the build alternatives to meet the purpose and need. The methodology reduced the range of alternatives through consecutively more detailed analyses that included an engineering and environmental screening evaluation process. The following steps were undertaken and will be undertaken as part of the tiered alternatives development process:

1. Review of Stage 0 conceptual alternatives.
2. Refinement of conceptual engineering for the conceptual alternatives provided in the Stage 0 Feasibility Study to reflect existing conditions.
3. Public review and comment on the refined Stage 0 conceptual alternatives as part of an agency meeting and a public meeting both held on August 15, 2013.
4. Preliminary evaluation of conceptual alternatives.

Figure ES-1. Study and Project Areas

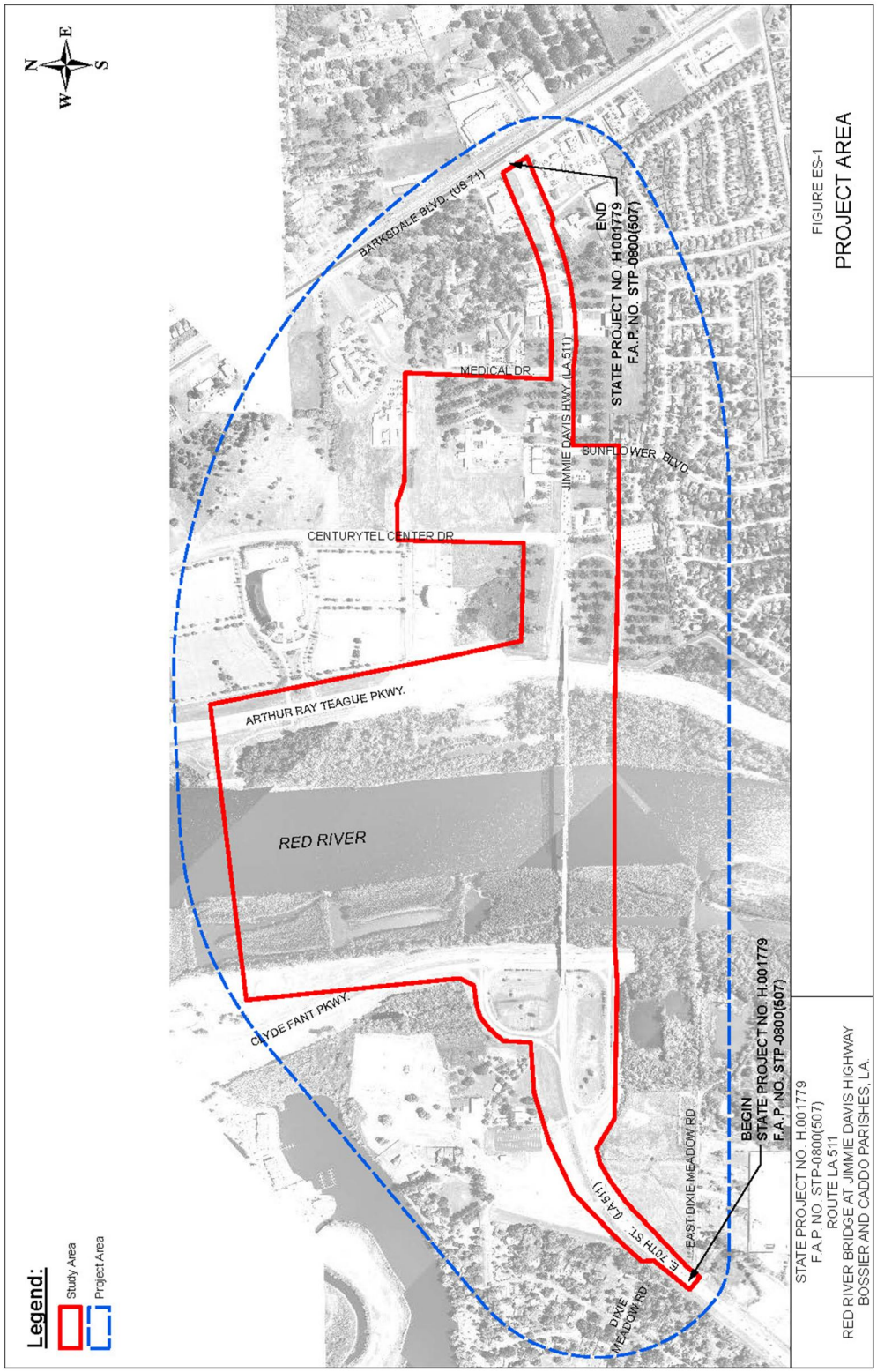

5. Elimination of two of the refined Stage 0 conceptual build alternatives and further refinements that led to the identification for further study of two Build Alternatives for the bridge and the interchange of LA 511 with the Arthur Ray Teague Parkway. Further refinement resulted in two Bridge Build Alternatives 5 and 7, and three Access Build Alternatives A, B, and C for Jimmie Davis Highway between Arthur Ray Teague Parkway and Barksdale Boulevard.
6. Refinement of the Bridge and Access Build Alternatives that are the subject of this EA.
7. Public review and comment on the Bridge and Access Build Alternatives and their associated impacts and benefits, which will be accomplished as part of the Public Hearing and comment period.
8. Selection of a Preferred Alternative, either a Build Alternative that combines one Bridge Build Alternative, one Trail Build Alternative, and one Access Build Alternative; the No-Build Alternative. This selection will be made following the public comment period.

ES.4 Stage 0 Alternatives

The *Red River Bridge at Jimmie Davis Highway Route LA 511 - Stage 0 Feasibility Study* evaluated seven conceptual alternatives. The Environmental Checklist prepared for that effort is found in Appendix A of this Draft EA. Alternatives 1, 2, and 3 were found to not be feasible during the Stage 0 Feasibility Study. The four that were found to be potentially feasible are described below:

Alternative 4

A new four-lane bridge with a shared use trail parallel to the existing bridge with removal of the existing bridge, the proposed ramps that provide access from Jimmie Davis Highway to a planned extension of Arthur Ray Teague Parkway that have since been constructed, and signal modifications at CenturyLink Center Drive (formerly Centurytel Center Drive).

Alternative 5

A new four-lane bridge with a shared use trail parallel to the existing bridge with removal of the existing bridge, the proposed ramps that provide access from Jimmie Davis Highway to a planned extension of Arthur Ray Teague Parkway that have since been constructed, new ramps that provide access from Arthur Ray Teague Parkway to Jimmie Davis Highway, removal of the signalized intersection at CenturyLink Center Drive, and a new frontage road to provide access to the south side of LA 511 west of Sunflower Boulevard.

Alternative 5a

A new two-lane bridge westbound with a shared use trail parallel to the existing bridge with eastbound traffic remaining on the existing bridge, the proposed ramps that provide access from Jimmie Davis Highway to a planned extension of Arthur Ray Teague Parkway that have since been constructed, removal of the signalized intersection at CenturyLink Center Drive, and a new frontage road to provide access to the south side of LA 511 west of Sunflower Boulevard.

Alternative 6

A new four-lane bridge with a shared use trail parallel to the existing bridge with removal of the existing bridge, the proposed ramps that provide access from Jimmie Davis Highway to a planned extension of Arthur Ray Teague Parkway that have since been constructed, new ramps that provide access from Arthur Ray Teague Parkway to Jimmie Davis Highway, and removal of the traffic signal at CenturyLink Center Drive.

ES.5 Conceptual Alternatives Development

The first step in the development of the Build Alternatives for this EA was to review the Stage 0 alternatives. The second step was to refine the alternatives to reflect the construction work that had occurred since the completion of the Stage 0 Feasibility Study in 2009. This construction work included a five-lane section along Jimmie Davis Highway in Bossier Parish, exit ramps from both eastbound and westbound Jimmie Davis Highway to Arthur Ray Teague Parkway, and the extension of Arthur Ray Teague Parkway south of LA 511 to Sligo Road and to US 71.

These refined alternatives were presented to an Agency Meeting and a Public Meeting, both held in the project area on August 15, 2013, which constituted the third step.

The primary comments received were a sense of urgency to increase the capacity of the river crossing and a concern that the traffic signal at CenturyLink Center Drive would continue to cause congestion even if the capacity of the crossing was increased. A report of these meetings can be found in Chapter 4.0 Comments and Coordination.

Based on the comments received, Step Four, the evaluation and further refinement was begun including the possibility of developing an additional alternative. At this step, it was determined that Alternative 4 should be eliminated because it did not provide a full interchange with Arthur Ray Teague Parkway and did not address the concerns regarding the signalized intersection of Jimmie Davis Highway and CenturyLink Boulevard. The other refinement in the alternatives was adjustments in the interchange ramps in Alternative 6 in an effort to reduce the construction cost.

While no new Build Alternative was proposed for the bridge, an alternative was developed for Jimmie Davis Highway, which is the segment of LA 511 in Bossier City east of the river, which replaces the five-lane section with a boulevard section including U-turns and J-turns. Both sections for Jimmie Davis Highway could be combined with any one of the remaining bridge alternatives.

Following review of these alternatives with DOTD, it was determined that the interchanges at Arthur Ray Teague Parkway in Alternatives 5 and 6 were superior to the one in 5A, especially for vehicles exiting CenturyLink Center. It was further determined that in Alternative 6, the interchange would not operate without the construction of the eastbound exit ramp as shown that would add considerable cost to the project. Therefore, it was determined that the interchange shown for Alternative 5 should be used in all alternatives. This effectively eliminated Alternative 6 because it differs from Alternative 5 only in regard to the interchange.

Following this meeting it was determined that there would be two Bridge Build Alternatives, Alternative 5 and a new Alternative 7 that combines the new two-lane bridge and the continued use of the existing bridge from Alternative 5a with the Arthur Ray Teague Parkway interchange in Alternative 5. There also would be two Access Build Alternatives east of the river, Alternative A that is the continued use of the existing five-lane section and Alternative B that provides a boulevard with U-turns and J-turns. A subsequent discussion with DOTD District 04 resulted in the development of a third Access Alternative C that is defined in Section 2.4.

There are two alternatives for the shared use trail. Both Trail Build Alternatives can be constructed in conjunction with both Bridge Build Alternative 5 and with Bridge Build Alternative 7. The Trail Build Alternatives will be referenced as Trail Build Alternative 1 and Trail Build Alternative 2. Both cross the river along the northern, or upriver, side of the Bridge Build Alternative structures. The variations in the alignments occur on both sides of the Red River and were developed to compare an alignment that includes an elevated structure that is separate from the bridge, providing direct access to the trail system; with one that is integral with the main bridge and utilizes at-grade crossings of surface roadways to access the existing trail system.

ES.6 Description of Conceptual Build Alternatives

The Conceptual Build Alternatives evaluated in this EA, as described below, were developed following the receipt in August 2013 of agency and public comments on the Stage 0 Build Alternatives and were confirmed during a conference call with the DOTD District 04 staff and the Headquarters project staff in December 2013. Subsequently, in 2014, DOTD began implementation of State Project No. 010662, LA 511 Jimmie Davis Bridge Rehabilitation, which will improve the existing Jimmie Davis Bridge to extend its useful life for an estimated 30 years.

The rehabilitation project is the outcome of a separate study that was underway at the time that this EA was initiated. Because the viability and magnitude of the rehabilitation project had not yet been determined, the scope of this EA was to objectively evaluate the long term viability of the existing structure; it was not to assume that, because it may be rehabilitated to some extent, the DOTD was determined to retain the structure.

Due to the substantial investment into the existing structure being made through the rehabilitation project, it has been determined by FHWA and DOTD that Bridge Build Alternative 5 is no longer under consideration as an element of the Preferred Alternative under this NEPA action. It has not been removed from this EA to demonstrate that a full range of alternatives were developed and to avoid any unnecessary delay in the completion of this NEPA process.

Bridge Build Alternative 5

This Bridge Alternative would include a new four-lane bridge approximately 3,120 feet long with main spans at the river and approach spans on both ends. The width would vary from 92'-1½" at the west approach span to 104'-1½" at the main span as it transitions to the east approach span. The proposed roadway profile is raised for the new bridge to maintain the existing minimum vertical clearance of 66 feet from the normal pool required by the US Coast Guard (USCG). The longitudinal grade at the west approach is +4.0%, and at the east approach is -4.5%. It would include a shared use trail on the north side with connections to the existing trails on both sides of the Red River. The trail would be compliant with the 1990 Americans with Disabilities Act (ADA) and the subsequent 2011 Public Right of Way Accessibility Guidelines (PROWAG), United States Access Board. The bridge would be a girder bridge and has been studied using both steel and concrete structural options. A truss bridge was not studied as, in general, the DOTD does not plan to construct truss bridges in the future because they are relatively more costly to construct, inspect, and maintain and because they lack redundancy. No design exceptions are required.

Plans, typical sections, and profiles are presented on Atlas Sheets 1 through 6. See Section 3.7 for additional information on the shared use trail. These Atlas Sheets include two typical sections and profiles to illustrate the two structural options of steel and concrete construction.

The design life span of the new structure would be 75 years, based on current bridge design codes (AASHTO LRFD). Under Alternative 5, the existing bridge would no longer be in service. Also, there would be a proposed full interchange with Arthur Ray Teague Parkway that includes 1) a westbound exit ramp at-grade that connects to the existing slip ramp exit; 2) a westbound entrance ramp that is a loop ramp beginning north of the existing intersection of the exit ramp; 3) a new eastbound exit ramp that would be constructed inside the radius of the existing eastbound exit ramp, and 4) a new eastbound entrance ramp that would utilize a portion of the existing eastbound exit ramp at the Parkway and would connect to Jimmie Davis Highway as an auxiliary lane generally at the existing intersection of Zach Avenue. Alternative 5 would provide roadway lighting on the new bridge.

On the west side of the river, Alternative 5 would require a bulb out on the south side of East 70th Street, which is the segment of LA 511 in Shreveport, to accommodate a U-turn farther west to provide vehicles exiting from the Riverpark Church property with access to the eastbound exit ramp leading to the Clyde Fant Parkway. This would be needed because the center lane of the five-lane roadway would be narrowed at the relocated exit driveway to align with the new bridge.

Bridge Build Alternative 7

This Bridge Alternative would include a new two-lane bridge north of the existing bridge, for westbound traffic, also approximately 3,120 feet long with main spans at the river and approach spans on both ends. The width would vary from 54'-5½" at the west approach span to 66'-5½" at the main span as it transitions to the east approach span. The proposed roadway profile is raised for the new bridge to maintain the existing minimum vertical clearance of 66 feet from the normal pool required by the USCG. The longitudinal grade at the west approach is +4.0%, and at the east approach is -4.5%. It also would include the shared use trail on the north side with connections to the existing trails on both sides of the Red River identical with the one described in Alternative 5. The bridge would be a girder bridge and has been studied using both steel and concrete structural options. A truss bridge was not studied as, in general, the DOTD does not plan to construct truss bridges in the future because they are relatively more costly to construct, inspect, and maintain and because they lack redundancy. No design exceptions are required for any new construction.

Plans, typical sections, and profiles are presented on Atlas Sheets 11 through 16. These Atlas Sheets include two typical sections and profiles to illustrate the two structural options of steel and concrete construction.

The design life span of the new structure would be 75 years, based on current bridge design codes (AASHTO LRFD). Under Alternative 7, the existing bridge would remain in service to provide two lanes for eastbound traffic. Alternative 7 would benefit from a current rehabilitation program to extend the useful life of the existing bridge for an anticipated remaining service life of at least 30 years. Alternative 7 would provide a full interchange with Arthur Ray Teague Parkway that would differ from Alternative 5 only to the extent that the different bridge alignment would require slightly different connections to the mainline of LA 511, but there would be no operational differences. Alternative 7 would provide roadway lighting on the new bridge. No additional U-turns on the west side would be required since the median of the existing roadway would not be narrowed.

Access Build Alternative A

This Access Alternative would maintain the existing five-lane section along Jimmie Davis Highway as shown on Atlas Sheets 19 and 20. Changes on the north side of the road would include the elimination of the signalized intersection with CenturyLink Boulevard and the construction of a right-in / right-out intersection with the westbound exit ramp. This also closes two driveways to existing commercial properties. Changes on the south side of the road would include the elimination of the Zach Avenue intersection as a result of the auxiliary lane of the eastbound entrance ramp. This requires the addition of a new roadway parallel to Jimmie Davis Highway along the rear of the properties facing it between Zach Avenue and Sunflower Boulevard. Access Alternative A would require the relocation of two commercial properties on the south side of LA 511, one of which houses six tenants, and access impacts to four other commercial properties on the north side of LA 511. The new roadway would provide access to the relocated properties and to a property on Zach Avenue. The signalized intersection at Sunflower Boulevard would remain. No design exceptions are required.

Access Build Alternative B

This Access Alternative would reconstruct Jimmie Davis Highway with a boulevard section, within existing right of way as shown on Atlas Sheets 21 and 22. The through eastbound lanes would remain unchanged. The conditions at CenturyLink Center Drive and Zach Avenue and the new roadway to the rear of properties on the south side would be the same as in Alternative A. The multi-phase signalized intersection at Sunflower Boulevard would be replaced with a channelized intersection for westbound vehicles turning left and a two-phase signal would be installed to control this turn. Vehicles turning westbound from Sunflower Boulevard would instead turn right and then proceed to a new two-phase signalized U-turn farther to the east. There also would be a westbound U-turn between Sunflower Boulevard and Medical Drive and an eastbound U-turn just west of Barksdale Boulevard. No design exceptions are required.

Access Build Alternative C

This Access Alternative would provide a new roadway, approximately 1300' long, connecting CenturyLink Center Drive and Medical Drive to provide for vehicles traveling between CenturyLink Center and Barksdale Boulevard to reach Jimmie Davis Highway. This roadway would be a three-lane extension of Reeves Marine Drive. The three-lane alignment is proposed because the left turn lanes at each intersection would be close together and because, as the adjacent land is currently vacant, this alignment would accommodate future development. Construction of this new road would be combined with either the five-lane section in Alternative A or the boulevard section in Alternative B, but would replace the right-in / right-out intersection of CenturyLink Boulevard and the westbound exit ramp with a cul-de-sac at a termination of CenturyLink Boulevard north of the intersection. Selection of Alternative C would eliminate the access impacts to the properties on the north side of LA 511. Atlas Sheet 23 shows Alternative C combined with Alternative A and Atlas Sheet 24 shows Alternative C combined with Alternative B. Atlas Sheet 25 shows the typical section of the new roadway.

Trail Build Alternative 1

Trail Alternative 1, which was shown in concept in the Stage 0 Alternatives, on the west side of the Red River is aligned between the Clyde Fant Parkway and the river from the existing trailhead of the Red River Bicycle Trail to the bridge and is elevated for approximately 898 feet to join the bridge structure; On the east side, it is similarly aligned between the Arthur Ray Teague Parkway and the river from the existing trailhead of the Arthur Ray Teague Jogging Trail and is elevated for approximately 845 feet to join the bridge structure. This results in the construction of structures separate from the main bridge structure to provide direct access of the at-grade trail to the main bridge. Atlas Sheets 7 and 17 show the plan of Alternative 1 with Bridge Alternatives 5 and 7. Atlas Sheet 9 shows the sections of Alternative 1.

Trail Build Alternative 2

Trail Alternative 2 is aligned alongside, and is terminated with, the bridge structure. On the west side, after crossing over the Clyde Fant Parkway, the trail, the mainline of LA 511 and the exit ramp connecting westbound traffic to the parkway are on a fill section. Trail Alternative 2 will remain adjacent to the structure and the ramp on structure and on fill to a point approximately 187 feet west of the parkway. From that point, it will turn south to a point sufficiently removed from the ramp terminal to cross the Clyde Fant Parkway at grade and would then turn north between the parkway and the river to join the existing trailhead of the Red River Bicycle Trail. On the east side it would be adjacent to the structure of the entrance ramp from the Arthur Ray Teague Parkway to westbound LA 511. Upon reaching grade, it would curve counterclockwise to pass under the entrance ramp and continue north to the access drive of the CenturyLink Center where it would cross the Arthur Ray Teague Parkway at grade to join the existing trailhead of the Arthur Ray Teague Jogging Trail. Atlas Sheets 8 and 18 show the plan of

Alternative 2 with Bridge Alternatives 5 and 7. Atlas Sheets 9 and 10 show the sections of Alternative 2.

ES 7 Preferred Alternative

The final phase of the alternatives development process involves selection of a preferred alternative by the FHWA and DOTD. The selection of the preferred alternative took into consideration the environmental effects and cost of each alternative, public input and comments at the Public Hearing and received during the comment period, and a number of other factors that are summarized in Chapter 4.0 and documented more fully in the Public Hearing Record.

As a result, the preferred alternative is the combination of Bridge Alternative 7, Trail Alternative 1 with provisos, and Access Alternative B with Access Alternative C.

The alternatives development process and evaluation in this EA provided 16 possible combinations of Build Alternatives. Following the determination that the Rehabilitation Project for the existing bridge would advance, Bridge Alternative 5 was dropped from consideration as described in Section 2.4 of this EA. This left eight possible combinations as it is clear from traffic data and public opinion that the No Build Alternative would not be considered. In their deliberations, the project team made the following considerations and determinations:

- As Bridge Alternative 7, the construction of a new two-lane westbound bridge, is the only remaining bridge concept, it is included in the selection of the preferred alternative.
- Regarding the Trail, public comments totaled: 16 for, 0 against Trail 1; and 4 for, 1 against Trail 2. Comments supporting a trail, but offering no preference, totaled 6 for and 1 against. These comments and the grade crossings resulting from Trail 2, clearly recommend Trail 1. However, Trail 2 was developed as an alternative with a lower construction cost, and, more importantly, with a lower long term financial burden on DOTD to maintain it in good repair by eliminating any elevated structure that would be separate from the roadway bridge. Therefore, Trail 1 is selected with the proviso that prior to final design, Cooperative Endeavor Agreements, or other binding agreements, will be executed by DOTD and the local jurisdictions. These agreements will transfer all maintenance and liability responsibilities in perpetuity to the local jurisdictions for both the elevated and at-grade segments of the trails from the points, on each side of the river, at which the trail physically separates from the roadway bridge to the points at which they join the existing trails. If agreement is not reached timely, Trail 2 will be constructed.
- As Access Alternative B meets current design standards and public comments for Alternatives A and B were not substantially different, Alternative B is selected notwithstanding the estimated $2.55 million additional cost compared to Alternative A. It was determined that in a project of this scale, a potential savings of that sum does not justify failing to upgrade the roadway.
- Access Alternative C also is selected because, although it is estimated to increase the total project cost by $2.71 million, it was determined Alternative C is justified by the goodwill that would be gained by avoiding property takings on the north side, and the possibility that acquisition of those properties would equal or exceed the estimated construction cost.

ES 8 Environmental Effects

There will be no significant adverse environmental impacts as a result of the project. Table ES-1 summarizes the findings of Chapter 3.0. There is only a small amount of additional required right-of-way that is not existing transportation right-of-way owned by the local governments. The additional acreage indicated for Access Build Alternatives A and B is primarily to construct the new access road to provide access to the commercial properties south of LA 511. Alternative B requires an additional 0.018 acres for geometric improvements at the LA 511/US 71 intersection. The affected acreage for wetlands and floodplains are largely a result of extending the shared use trail from the bridge to the existing trailheads. The impacts to the waters of the US are primarily a result of widening the bridge structure across the river. Vegetation effects are primarily to maintained areas. Bridge Build Alternatives 5 and 7 both affect 1.01 acres of bottomland hardwood. The vegetation

effects for Alternative C result from the construction of the new roadway extension of Reeves Marine Road from CenturyLink Center Drive to Medical Drive. There would potentially be three relocations as a result of access impacts under Access Build Alternatives A and B. The selection of Access Build Alternative C would reduce the number by one.

ES.9 Estimate of Probable Cost

Bridge and Elevated Trail

The estimated cost for the Bridge Build Alternatives, including the elevated portions of the Trail Build Alternatives, and with a 25 percent contingency, are as follows:

- Bridge Build Alternative 5 with Trail Build Alternative 1: Concrete $ 101.38 million; Steel $102.05 million
- Bridge Build Alternative 5 with Trail Build Alternative 2: Concrete $ 96.20 million; Steel $98.09 million
- Bridge Build Alternative 7 with Trail Build Alternative 1: Concrete $ 65.04 million; Steel $65.49 million
- Bridge Build Alternative 7 with Trail Build Alternative 2: Concrete $ 59.86 million; Steel $61.54 million

At-Grade Trail

The estimated costs with a 25 percent contingency for the at-grade portions of the Trail Build Alternatives associated with all Bridge Build Alternatives and both construction material options are as follows:

- Trail Build Alternative 1: $1.14 million.
- Trail Build Alternative 2: $2.92 million.

Access Roadways

The estimated costs for the Access Build Alternatives with a 25 percent contingency are as follows:

- Access Build Alternative A: $ 9.54
- Access Build Alternative A with Access Build Alternative C: $ 12.25
- Access Build Alternative B: $ 12.09
- Access Build Alternative B with Access Build Alternative C: $ 14.80

Based on the costs of these separate elements, the total construction cost of the project will range from $ 72.33 million for Bridge Build Alternative 7 Concrete with Trail Build Alternative 2 and Access Build Alternative A to $ 117.99 million with Bridge Build Alternative 5 Steel with Trail Build Alternative 1, Access Build Alternative B, and Access Build Alternative C.

ES.10 Funding Availability

At this time, no date has been established for the construction of this project, and no source of funds has been identified.

ES.11 Summary of Benefits

Bridge Build Alternatives 5 and 7 both would satisfy the Purpose and Need for this project and would provide long-term benefits. These alternatives would improve the LA 511 corridor by adding capacity; better integrating vehicular, pedestrian, and bicycle travel modes; and improving safety.

Table ES- 1. Summary of Environmental Effects

Evaluation Criteria	Unit	Alternatives								
		Bridge and Elevated Trail				At-grade Trail		Access		
		5 and 1	5 and 2	7 and 1	7 and 2	1	2	A	B	C
Corridor Alignment and Right-of-way Considerations										
Additional Required Right-of-Way to be Acquired	acres	0.03	0.03	0.02	0.02	0.40	0.40	1.12	1.14	2.57
Constructability / Maintenance of Traffic (MOT) During Construction										
MOT on LA 511	Y/N	Y	Y	Y	Y	N	N	N	Y	Y
MOT on Other Streets	Y/N	N	N	N	N	N	N	N	N	Y
Human Environment Considerations & Estimated Impacts										
Consistent with Local Plans	Y/N	Y	Y	Y	Y	Y	Y	Y	Y	Y
Schools	Y/N	N	N	N	N	N	N	N	N	N
Churches	Y/N	Y	Y	N	N	N	N	N	N	N
Recreational Facilities	Y/N	N	N	N	N	Y	Y	N	N	N
Residential Relocation/Access	Y/N	N	N	N	N	N	N	N	N	N
Commercial Sites:	Y/N	N	N	N	N	N	N	Y	Y	N
Potential Relocations	number	0	0	0	0	0	0	2	2	0
Access without Alternative C	number	0	0	0	0	0	0	6	6	0
Access with Alternative C	number	0	0	0	0	0	0	4	4	0
NRHP Eligible Standing Structures	number	1	1	1	1	0	0	0	0	0
NRHP Eligible Archaeological Sites	number	0	0	0	0	0	0	0	0	0
Disproportionate Environmental Justice Impacts	Y/N	N	N	N	N	N	N	N	N	N
Noise Impacts	Y/N	N	N	N	N	N	N	N	N	N
Feasible & Reasonable Noise Abatement	Y/N	N	N	N	N	N	N	N	N	N
Air Quality Impacts	Y/N	N	N	N	N	N	N	N	N	N
Physical Environment Considerations& Estimated Impacts										
Water Wells	number	0	0	0	0	0	0	0	0	15
Natural Gas Pipeline Crossings	acres	0.00	0.00	0.00	0.00	0.00	0.00	0.00	0.00	0.00
Prime Farmland	acres	0.00	0.00	0.00	0.00	0.00	0.00	0.00	0.00	0.00
Potential Relocations	number	0	0	0	0	0	0	3	3	0
Natural Environment Considerations & Estimated Impacts										
Wetlands	acres	2.65	2.65	1.66	1.66	0.00	0.00	0.00	0.00	0.00
Waters of the US	acres	1.81	1.81	1.04	1.04	0.00	0.00	0.00	0.00	0.00
Impacts to Vegetation	Y/N	Y	Y	Y	Y	Y	Y	Y	Y	Y
Maintained Roads/Levees/ROWs/Lawns	acres	2.80	2.80	2.79	2.79	1.97	3.35	1.12	1.14	2.76
Bottomland Hardwood Forest	acres	1.01	1.01	1.01	1.01	0.00	0.00	0.00	0.00	0.00
100-Year Floodplains	acres	7.43	8.20	4.83	5.50	1.60	2.37	0.00	0.00	0.00
Estimated Construction Cost (2013 $)										
Total Implementation Cost*	Millions $	101.38 to 102.05	96.20 to 98.09	65.04 to 65.49	59.86 to 61.54	1.14	2.92	9.54	12.09	2.71

*Includes both steel and concrete construction options, right-of-way acquisition, relocation, and 25 percent contingency.

ES.12 Summary of Permits and Certifications

The following permits and/or certifications would be required for the proposed project:

- US Army Corps of Engineers (USACE) permit under the authority of 33USC 401, Section 10; 1413, Section 404. Impacts to jurisdictional wetlands were identified as noted above. If the Corps of Engineers takes jurisdiction over areas of wetlands affected by the project, permits and certifications would be required for unavoidable impacts to the wetlands. Specifically, any dredge or fill activity that would impact jurisdictional wetlands, directly or indirectly, would require a Section 404 permit from the USACE.
- United States Coast Guard (USCG) Bridge Permit is required for the construction of a bridge across a navigable waterway in accordance Section 9 of the Rivers and Harbors Act of 1899 and the General Bridge Act of 1946.
- State of Louisiana Department of Environmental Quality – Should the USACE take jurisdiction over areas of wetlands, commensurate with the USACE permitting, a Water Quality Certification would be required under the authority contained in the Louisiana Revised Statutes of 1950, Title 30, Chapter 11, Part IV, Section 2074 A (3) and provisions of Section 401 of the Clean Water Act (PL 95 217).
- The Louisiana Department of Environmental Quality (LDEQ) regulates the discharge of storm water from construction sites as defined in the Louisiana Administrative Code (LAC) (LAC 33IX.2511.B.14.j) A Louisiana Discharge Elimination System (LPDES) Storm Water General Permit for Construction Activities is required if the disturbance is greater than one acre.
- City of Shreveport/Caddo Parish - Regarding floodplain impacts, for that portion of the route located within the City of Shreveport, a letter of “No Objection" will be requested for the proposed project under the authority of city ordinances.
- City of Bossier City/Bossier Parish - Regarding floodplain impacts, for that portion of the route located within the City of Bossier City, a letter of “No Objection" will be requested for the proposed project under the authority of city ordinances.

ES.13 Summary of Commitments and Measures for Avoidance, Minimization, and Mitigation

The following is a summary of the project commitments and measures for avoidance, minimization, and mitigation of potential adverse impacts based on the analyses and evaluations in this EA. All supplemental reports and agency coordination required in connection with these analyses and evaluations have been completed.

Right-of-Way and Relocation

The access impacts to the properties on the south side of LA 511 potentially would be minimized by the construction of a new access roadway from Sunflower Boulevard to the BLM Storage along the southern limit of the properties located at 1600, 1604, and 1608 Jimmie Davis Highway. This would avoid the need to acquire and relocate BLM Storage and would provide access from the rear for the continuing use of the other properties currently accessed from Jimmie Davis Highway. The acreage of additional required right-of-way for this new access road is included under Alternatives A and B in Table 3-1.

The driveway closures on the north side of Jimmie Davis Highway would be avoided by the selection of Alternative C as described in Section 3.6.2, which closes the intersection of the ramp with CenturyLink Center Drive and allows the driveways to remain open. Alternative C would require a sliver of land from the property at 1609 Jimmie Davis Highway to construct a cul-de-sac at the terminus of CenturyLink Center Drive. The additional required right-of-way for Alternative C is found in Table 3-1.

The existing uses on three properties potentially would request relocation as a result of changes in access. The one on the north side would not require relocation if Alternative C is selected.

The takings to construct the new roads on the north side (Alternative C) and south side (Alternatives A and B) and the cul-de-sac for CenturyLink Center Drive (Alternative C) will be mitigated through acquisition and relocation assistance that will be provided in accordance to the Uniform Relocation Assistance and Real Property Acquisition Policies Act of 1970, (Uniform Act).

Environmental Justice

No measures are required with the exception of complying with any potential requests by Hispanic residents for supplying project information in Spanish.

Community Facilities

The route for vehicles exiting Riverpark Church that wish to travel eastbound on LA 511 under Bridge Build Alternative 5 would be required to travel a considerable distance if no changes were made in the roadway system. To minimize this inconvenience, a small area of additional right-of-way will be acquired on the south side of LA 511 to facilitate a U-turn approximately 1,000 feet west of the exit driveway.

Cultural Resources

Alternative 7 would benefit from the current rehabilitation of the existing bridge, which is included in the No-Build Alternative. Section 106 consultation has been initiated regarding this project and the No-Build Alternative. Section 106 and Section 4(f) concerns relative to the No-Build Alternative would be resolved through the implementation of the rehabilitation project.

Aesthetics

Under Bridge Build Alternatives 5 and 7, context sensitive design elements will be employed during final design to make the new structure aesthetically pleasing and compatible with the existing viewshed across the Red River. If Alternative 7 is selected as the Preferred Alternative, color, light standards, and other street furniture will be selected to be compatible with the similar elements selected for the rehabilitation of the existing bridge.

Wetlands

The permits and mitigation requirements for the proposed project are discussed in Section 3.25 Permits. Bridge Build Alternatives 5 and 7 will require Section 404 and Section 10 permits from USACE. These permits must be obtained in coordination with a Section 9 permit from the USCG.

Floodplains

Mitigation of the effects of the project in the 100-year floodplain will be accomplished through the permit process explained in Section 3.25 Permits.

Ground Water Resources

The project does not lie within the boundaries of a sole source aquifer. Additional investigation of the potential effects to the existing ground water wells will be undertaken during final design. Avoidance, minimization, or mitigation measures will be developed if potential impacts are identified at that time.

Topography Soils and Geology

Soil disturbance, moderate cut and fill, and potential soil erosion impacts will be mitigated through the use of Best Management Practices (BMPs), which would reduce offsite movement of exposed soils during and after construction.

Vegetation, Significant Trees, and Wildlife

Impacts to vegetation range from 6.89 acres to 11.06 acres depending on the combination of Bridge, Trail, and Access Build Alternatives selected. Except for 1.01 acres of bottomland hardwood affected by Alternatives 5 and 7, all areas affected are maintained rights-of-way, levees, or lawns.

No significant trees have been identified within the study area. However, if any significant trees are identified during final design or construction, the procedures defined in Engineering Directives and Standards Manual (EDSM) I.1.1.21 Treatment of Significant Trees in DOTD Right-of-Way will be followed. The EDSM is a general policy governing the treatment of significant trees within the highway right-of-way, zone of construction or operational influence. It identifies the five species that may be considered for implementation of a context sensitive design (i.e. preservation, specified limited impact, or special treatment) where practical.

Impacts to wildlife resulting from sediment deposition or increased turbidity will be reduced to less than significant levels by the proper use of BMPs (see Section 3.12, Surface Water Resources).

Threatened and Endangered Species

The Louisiana Natural Heritage Program (LNHP) recommends the following in an effort to minimize or mitigate potential impacts to endangered species:

Interior Least Tern - "w*ork activities occur outside of the breeding season (late April through August) and should minimize the impacts to interior least tern habitat*". However, if construction activities during the breeding season (late April through August) are unavoidable, further consultation with the LNHP is recommended to determine what measures, if any, are suggested.

Pallid Sturgeon - "*pallid sturgeon typically spawn from May-August, but successful reproduction has been severely reduced due to habitat modification. This includes the loss of habitat through the construction of dams that have modified flows, reduced turbidity, and lowered water temperatures*." The LNHP letter goes on to recommend that "*necessary measures are taken to avoid the breeding season and any degradation of water quality*". If construction activities during the breeding season (May-August) are unavoidable, further consultation with the LNHP is recommended to determine what measures, if any, are suggested.

DOTD will avoid construction during the breeding seasons of the Interior Least Tern and the Pallid Sturgeon to the extent that it is feasible. If construction during those periods is unavoidable, further consultation with LNHP will be initiated to determine what measures are suggested.

Navigation

If a Bridge Build Alternative is selected as the Preferred Alternative, DOTD will coordinate with the USCG to reduce impacts on navigation in the Red River. Measures to mitigate impacts will be included in the bridge permit requirements as approved by the USCG.

Indirect and Cumulative

Efforts to avoid or minimize cumulative impacts have been undertaken and will be re-examined during final design to reduce the potential for cumulative impacts. Those identified include:

- Indirect impacts may result from the relocation of business and residences in proximity to the new roadway. Mitigation associated with indirect impact will be undertaken by local, state and federal agencies in association with the permitting of that construction.
- Mitigation associated with floodplains will be controlled by City and Parish ordinances.
- BMPs will be accomplished through the Louisiana Discharge Elimination System (LPDES) Storm Water General Permit for Construction process.

Construction Impacts

Air

Mitigation techniques for air quality impacts due to temporary construction activities could include development of site-specific traffic management plans; temporary signage and other traffic controls; designated staging areas, worker parking lots (with shuttle bus service if necessary), truck routes, and prohibition of construction vehicle travel during peak traffic periods.

Potential fugitive dust impacts will be mitigated through good "housekeeping" practices such as water sprays during demolition; wetting, paving, or landscaping exposed earth areas; covering dust-producing materials during transport; limiting dust-producing construction activities during high wind conditions; and providing street sweeping and tire washes for trucks leaving the site.

Noise

To reduce temporary construction noise impacts that may result, “good housekeeping” practices are recommended. The contractor would be required to comply with the DOTD *Highway Traffic Noise Policy* regarding allowable construction periods and activities. Additional noise control measures that are available to minimize the noise impacts include:

- Establish equipment and material staging areas away from residences and other sensitive receptors as defined in Table 3-17 in Section 3.20 Noise;
- Whenever possible, conduct all construction activities during the daytime period to minimize any potential sleep disturbances;
- Substitute louder equipment to minimize nuisance noise in the community; and,
- Adequately notify the public of construction operations and schedules. Methods such as construction-alert publications could be used to handle complaints quickly.

Water Quality

Runoff control measures that are installed at the time of construction to reduce runoff pollution can effectively limit the entry of pollutants into surface waters and protect their quality, fish habitats, and public health. These control measures are termed BMPs. With the proper use of BMPs, impacts to water quality from the Build Alternate would be short-term and minimal.

Maintenance of Traffic

A Maintenance of Traffic plan will be prepared during final design.

Cooperative Endeavor Agreements

During final design, DOTD will execute Cooperative Endeavor Agreements, or other binding agreements, with the local jurisdictions regarding the implementation of Trail Alternative 1 as an element of the Preferred Alternative, as defined in Section 2.7. These agreements will transfer all maintenance and liability responsibilities in perpetuity to the local jurisdictions for both the elevated and at-grade segments of the trails from the points, on each side of the river, at which the trail physically separates from the roadway bridge to the points at which they join the existing trails. If, for whatever reason, agreement cannot be reached by DOTD with one or both jurisdictions, Trail Alternative 2 will be incorporated in the final design and constructed wherever agreement is not reached.

THIS PAGE INTENTIONALLY LEFT BLANK

TABLE OF CONTENTS

TABLE OF CONTENTS

ENVIRONMENTAL DETERMINATION CHECKLIST CL-1

ES.0 EXECUTIVE SUMMARY ES-1

ES.1 PROPOSED PROJECT ES-1
ES.2 PURPOSE AND NEED ES-1
ES.3 ALTERNATIVES DEVELOPMENT METHODOLOGY ES-2
ES.4 STAGE 0 ALTERNATIVES ES-4
ES.5 CONCEPTUAL ALTERNATIVES DEVELOPMENT ES-5
ES.6 DESCRIPTION OF CONCEPTUAL BUILD ALTERNATIVES ES-6
ES 7 PREFERRED ALTERNATIVE ES-9
ES 8 ENVIRONMENTAL EFFECTS ES-9
ES.9 ESTIMATE OF PROBABLE COST ES-10
ES.10 FUNDING AVAILABILITY ES-10
ES.11 SUMMARY OF BENEFITS ES-10
ES.12 SUMMARY OF PERMITS AND CERTIFICATIONS ES-12
ES.13 SUMMARY OF COMMITMENTS AND MEASURES FOR AVOIDANCE, MINIMIZATION, AND MITIGATION ES-12

1.0 INTRODUCTION AND PURPOSE AND NEED 1-1

1.1 PROJECT DESCRIPTION 1-1
1.2 PROJECT HISTORY 1-1
1.3 REQUIREMENTS FOR THIS STUDY 1-4
1.4 PROPOSED ACTION 1-4
1.5 PURPOSE AND NEED 1-4
1.5.1 Need for Relief of Traffic Congestion 1-5
1.5.2 Need for Bicycle and Pedestrian Crossing 1-5
1.5.3 Need for Improved Safety 1-6
1.5.4 Need for Access Improvements to Traffic Generators and Transportation Facilities 1-6

2.0 PROJECT ALTERNATIVES 2-1

2.1 ALTERNATIVES DEVELOPMENT METHODOLOGY 2-1
2.2 STAGE 0 ALTERNATIVES 2-1
2.3 CONCEPTUAL ALTERNATIVES DEVELOPMENT 2-3
2.4 DESCRIPTION OF CONCEPTUAL BUILD ALTERNATIVES 2-4
2.5 NO-BUILD ALTERNATIVE 2-41
2.6 ALTERNATIVES EVALUATED IN THIS EA 2-41
2.7 PREFERRED ALTERNATIVE 2-41
2.8 CONCEPTUAL ENGINEERING DESIGN LAYOUTS 2-42
2.9 PRELIMINARY IMPLEMENTATION COST ESTIMATE 2-42

3.0 AFFECTED ENVIRONMENT 3-1

3.1 CONSISTENCY WITH LOCAL, STATE AND REGIONAL LAND USE POLICIES 3-1
3.2 LAND USE AND ZONING 3-1
3.2.1 No-Build Alternatives.....3-2
3.2.2 Build Alternatives 3-3
3.2.3 Avoidance, Minimization, and Mitigation.....3-4
3.3 RIGHT-OF-WAY ACQUISITION AND RELOCATION.....3-4
3.3.1 No-Build Alternative 3-4
3.3.2 Build Alternatives 3-4
3.3.3 Avoidance, Minimization, and Mitigation.....3-8
3.4 DEMOGRAPHICS.....3-9
3.5 ENVIRONMENTAL JUSTICE.....3-10
3.5.1 No-Build Alternative 3-11
3.5.2 Build Alternatives 3-11
3.5.3 Avoidance, Minimization, and Mitigation.....3-11
3.6 TRAFFIC 3-11
3.6.1 No-Build Alternative 3-12
3.6.2 Build Alternatives 3-13
3.6.3 Safety 3-14
3.6.4 Avoidance, Minimization, and Mitigation.....3-14
3.7 BICYCLE AND PEDESTRIAN FACILITIES.....3-14
3.8 COMMUNITY FACILITIES.....3-16
3.8.1 No-Build Alternative 3-16
3.8.2 Build Alternatives 3-16
3.8.3 Avoidance, Minimization, and Mitigation.....3-19
3.9 CULTURAL RESOURCES.....3-21
3.9.1 No-Build Alternative 3-21
3.9.2 Build Alternatives 3-22
3.9.3 Avoidance, Minimization, and Mitigation.....3-22
3.10 PARKS AND RECREATIONAL FACILITIES 3-22
3.10.1 No-Build Alternative 3-22
3.10.2 Build Alternatives 3-23
3.10.3 Avoidance, Minimization, and Mitigation.....3-23
3.11 AESTHETICS.....3-23
3.11.1 No-Build Alternative 3-24
3.11.2 Build Alternative 3-24
3.11.3 Avoidance, Minimization and Mitigation.....3-24
3.12 WETLANDS 3-24
3.12.1 Wetlands and Other Waters of the U.S. 3-24
3.12.2 No-Build Alternative: Wetlands and Other Waters of the U.S. 3-25
3.12.3 Build Alternatives: Wetlands and Other Waters of the U.S. 3-25
3.12.4 Wetland Reserve Program.....3-26

3.12.5 No-Build Alternative, Wetlands Reserve Program....3-26
3.12.6 Build Alternatives, Wetlands Reserve Program....3-26
3.12.7 Avoidance, Minimization, and Mitigation....3-26

3.13 SURFACE WATER RESOURCES....3-26
3.13.1 Water Quality....3-28
3.13.2 No-Build Alternative, Water Quality....3-28
3.13.3 Build Alternatives, Water Quality....3-29
3.13.4 Scenic Streams....3-31
3.13.5 No-Build Alternative, Scenic Streams....3-31
3.13.6 Build Alternatives, Scenic Streams....3-31
3.13.7 Avoidance, Minimization, and Mitigation....3-31

3.14 100-YEAR FLOODPLAINS....3-32
3.14.1 No-Build Alternative....3-32
3.14.2 Build Alternatives....3-32
3.14.3 Avoidance, Minimization, and Mitigation....3-32

3.15 GROUNDWATER RESOURCES....3-32
3.15.1 No-Build Alternative....3-34
3.15.2 Build Alternatives....3-34
3.15.3 Avoidance, Minimization, and Mitigation....3-34

3.16 TOPOGRAPHY, GEOLOGY, AND SOILS....3-34
3.16.1 No-Build Alternative....3-35
3.16.2 Build Alternatives....3-35
3.16.3 Avoidance, Minimization, and Mitigation....3-35

3.17 VEGETATION, SIGNIFICANT TREES, AND WILDLIFE....3-37
3.17.1 No-Build Alternative, Vegetation....3-37
3.17.2 Build Alternatives, Vegetation....3-37
3.17.3 No-Build Alternative, Significant Trees....3-38
3.17.4 Build Alternatives, Significant Trees....3-38
3.17.5 No-Build Alternative, Wildlife....3-39
3.17.6 Build Alternatives, Wildlife....3-39
3.17.7 Avoidance, Minimization, and Mitigation....3-40

3.18 THREATENED AND ENDANGERED SPECIES....3-40
3.18.1 No-Build Alternative....3-42
3.18.2 Build Alternatives....3-42
3.18.3 Avoidance, Minimization, and Mitigation....3-42

3.19 AIR QUALITY....3-43
3.19.1 No-Build Alternative....3-47
3.19.2 Build Alternatives....3-47
3.19.3 Avoidance, Minimization, and Mitigation....3-48

3.20 NOISE....3-48
3.20.1 Noise Monitoring Results....3-50

3.20.2 Noise Measurement Validation 3-50
3.20.3 No-Build Alternative 3-53
3.20.4 Build Alternative 3-53
3.20.5 Avoidance, Minimization, and Mitigation....3-54

3.21 POTENTIALLY CONTAMINATED MATERIALS SITES 3-54
3.21.1 No-Build Alternative 3-55
3.21.2 Build Alternatives 3-55
3.21.3 Avoidance, Minimization, and Mitigation....3-55

3.22 AGRICULTURAL RESOURCES....3-55
3.22.1 No-Build Alternative 3-55
3.22.2 Build Alternatives 3-55
3.22.3 Avoidance, Minimization, and Mitigation....3-55

3.23 COASTAL ZONE 3-55
3.23.1 No-Build Alternative 3-56
3.23.2 Build Alternatives 3-56
3.23.3 Avoidance, Minimization, and Mitigation....3-56

3.24 CONSTRUCTION IMPACTS 3-56
3.24.1 No-Build Alternative 3-56
3.24.2 Build Alternatives 3-56
3.24.3 Avoidance, Minimization, and Mitigation....3-57

3.25 INDIRECT AND CUMULATIVE IMPACTS....3-58
3.25.1 No-Build Alternatives....3-59
3.25.2 Build Alternative 3-59
3.25.3 Avoidance, Minimization, and Mitigation....3-59

3.26 PERMITS AND APPROVALS 3-60

4.0 COMMENTS AND COORDINATION 4-1

4.1 SOLICITATION OF VIEWS 4-1
4.2 AGENCY COORDINATION....4-1
4.3 PUBLIC INVOLVEMENT 4-2
4.4 PUBLIC HEARING....4-2

5.0 SECTION 4(F) EVALUATION 5-1

5.1 METHODOLOGY....5-1
5.1.1 Definition of Section 4(f) Uses 5-2
5.1.2 Individual Section 4(f) Evaluation....5-2
5.1.3 Temporary Occupancy Exception (not a use) 5-3
5.1.4 De minimis Impact....5-4
5.1.5 Historic Properties....5-4
5.1.6 Parks, Recreation Areas, and Refuges 5-4

5.2 PURPOSE AND NEED 5-4
5.2.1 Need for Relief of Traffic Congestion....5-4

5.2.2 Need for Bicycle and Pedestrian Crossing 5-5
5.2.3 Need for Improved Safety 5-5
5.2.4 Need for Access Improvements to Traffic Generators and Transportation Facilities..5-5

5.3 SELECTION OF THE PREFERRED ALTERNATIVE 5-6
5.4 SECTION 4(F) PROPERTIES 5-7
5.4.1 Publicly Owned Parks and Recreational Areas 5-7
5.4.2 Historic Sites 11

5.5 COORDINATION 5-12
5.5.1 Officials with Jurisdiction 5-12
5.5.2 Public 5-13

LIST OF TABLES

Table 2-1. Transportation Improvement Program (TIP) for Projects within the Project area 2-41
Table 2-2. Preliminary Implementation Cost Estimate (millions 2014 $) by Alternative 2-44
Table 2-3. Preliminary Implementation Cost Estimate (million 2014 $)for each Combination of Alternatives 2-45
Table 3-1. Additional Required Right-of-way and Potential Relocations 3-4
Table 3-2. Potential Access Impacts and Relocation Costs 3-6
Table 3-3. Right-of-Way Acquisition Costs 3-8
Table 3-4. Population Trends: 2000 to 2010 3-9
Table 3-5. State, Parish and Project area Population by Race and Ethnic Origin (2010) 3-9
Table 3-6. Jimmie Davis Highway Corridor Income Characteristics (2010) Project Area 3-10
Table 3-7. No-Build ADT Volumes 3-12
Table 3-8. No-Build LOS 3-12
Table 3-9. Directional Peak Hour LOS for Bridge Build Alternatives 5 and 7 3-13
Table 3-10. LA 511 Directional Peak Hour LOS for Access Build Alternatives A and B 3-14
Table 3-11 Parks and Recreational Facilities within the Project Area 3-23
Table 3-12. Potential Impacts to Wetlands and Waters of the US 3-26
of Additional Required Right-of-Way by Bridge and Trail Build Alternatives 3-26
Table 3-13. Water Quality Attainment—Red River 3-29
(From Arkansas state line to US-165 in Alexandria) 3-29
Table 3-14 Acres of Potential Impacts to Vegetation Communities by Alternative 3-38
Table 3-15. Federally Protected Species of Potential 3-41
Occurrence in Bossier and Caddo Parishes 3-41
Table 3-16. National and Louisiana Ambient Air Quality Standards 3-46
Table 3-17. FHWA Noise Abatement Criteria, Hourly A-weighted Sound Level Decibels (dBA) 3-52
Table 3-18 Baseline Noise Level Measured along Jimmie Davis Highway (dBA) 3-52
Table 3-19 Comparison of Measured and Predicted Noise levels (in dBA) 3-53
Table 3-20. Predicted Peak Hour Leq Noise Levels under the No-Build and Build Alternatives (dBA) 3-54
Table 4-1. Summary of Solicitation of Views Responses 4-1

Table 4-2. Summary of Comments on Stage 0 Alternatives 4-2
Table 5-1. Publicly Owned Parks and Recreational Areas within the Project Area 5-8
Table 5-2. Summary of Preferred Alternative Historic Sites Uses/Impacts....5-12

LIST OF FIGURES

Figure ES-1. Study and Project Areas....ES-3
Figure 1-1. Study and Project Areas....1-2
Figure 1-2. DOTD Project Delivery Process....1-3
Figure 2-1. Sketches of Sixteen (16) Alternative Combinations....2-9
Figure 3-1. Existing Land Use....2-3
Figure 3-3. Potential Access Impacts 3-7
Figure 3-4. Existing Trails and Proposed Shared Use Trail Alternative 1 3-17
Figure 3-5. Existing Trails and Proposed Shared Use Trail Alternative 2 3-18
Figure 3-6. Community Facilities 3-20
Figure 3-7. Wetlands and Waters of the US....3-27
Figure 3-8. 100-Year Flood Plains Map....3-33
Figure 3-9. Soils Map 3-36
Figure 3-10. Typical A-Weighted Noise Levels 3-51
Figure 3-11. Noise-Monitoring Sites for the Jimmie Davis Bridge....3-53
Figure 5-2. Red River Waterway Commission, Arthur Ray Teague Parkway Amenities....5-8
Figure 5-1. Publicly Owned Parks and Recreational Areas within the Project Area 5-9
Figure 5-3. Red River Bicycle Trail 5-10
Figure 5-4. Charles and Marie Hamel Memorial Park 5-11

APPENDICES

APPENDIX A - STAGE 0 ENVIRONMENTAL CHECKLIST
APPENDIX B - SOLICITATION OF VIEWS AND RESPONSES
APPENDIX C - AGENCY AND PUBLIC MEETINGS
APPENDIX D - LETTER FROM STATE HISTORIC PRESERVATION OFFICER
APPENDIX E - ELECTRONIC COMMUNICATION FROM THE US COAST GUARD AND THE *BRIDGE TYPE STUDY TECHNICAL MEMORANDUM*

1.0

INTRODUCTION AND PURPOSE AND NEED

1.0 Introduction and Purpose and Need

1.1 Project Description

The Louisiana Department of Transportation and Development (DOTD) is proposing the development of a four-lane crossing of the Red River on Jimmie Davis Highway (LA 511) including improvements to the approach roadways, Caddo and Bossier Parishes, Louisiana. The project also includes a shared use trail connecting the Red River Bicycle Trail in Caddo Parish with the Arthur Ray Teague Jogging Trail in Bossier Parish.

Conceptual engineering and an environmental assessment (EA) were prepared to evaluate potential corridor improvement concepts and to determine the environmental impacts associated with the proposed project.

The Federal Highway Administration (FHWA) is the lead Federal agency for the project.

The proposed roadway improvements will extend along LA 511 from East Dixie Meadow Road in the City of Shreveport, Caddo Parish, to Barksdale Boulevard (US 71) in the City of Bossier City, Bossier Parish. The proposed shared use trail will extend northward from LA 511 on both sides of the river primarily through the existing rights-of-way of the Clyde Fant Parkway on the west and the Arthur Ray Teague Parkway on the east to join the existing trails that it is intended to link.

LA 511 is a five-lane principal arterial except for the segment comprising the existing Jimmie Davis Bridge crossing of the Red River, which is a two lane roadway without shoulders. It is known as East 70th Street on the west side of the river in Shreveport and Jimmie Davis Highway on the east side in Bossier City.

As shown in Figure 1-1, logical termini for the project are East Dixie Meadow Road in the west and Barksdale Boulevard (US 71) in the east. These logical termini, which also defined the project area in the *Red River Bridge at Jimmie Davis Highway Route LA 511 - Stage 0 Feasibility Study and Environmental Inventory*, were identified by the DOTD and approved by FHWA. The immediate project area is comprised of vacant land primarily comprising roadway rights-of-way and suburban residential development. Commercial uses at a suburban density are found along LA 511 between the bridge and Barksdale Boulevard. Institutional facilities in the vicinity include two churches, the CenturyLink Center, and the Cornerstone Hospital.

The overall goals of this project are to increase the roadway capacity of the LA 511 crossing of Red River and to link the existing bicycle and pedestrian facilities. The implementation of these improvements will enhance the quality of life and will support future transportation mobility.

1.2 Project History

The stages of the DOTD Project Delivery Process are illustrated in Figure 1-2. In 2009, the DOTD completed the *Stage 0 Feasibility Study* to determine the preliminary environmental and engineering feasibility of the project. The *Stage 0: Feasibility Study* is a requirement of DOTD's Program Development and Project Delivery Process for a proposed project. Following the completion of the *Stage 0 Feasibility Study*, the project was recommended for advancement into the next stage of the DOTD Project Delivery

Figure 1-1. Study and Project Areas

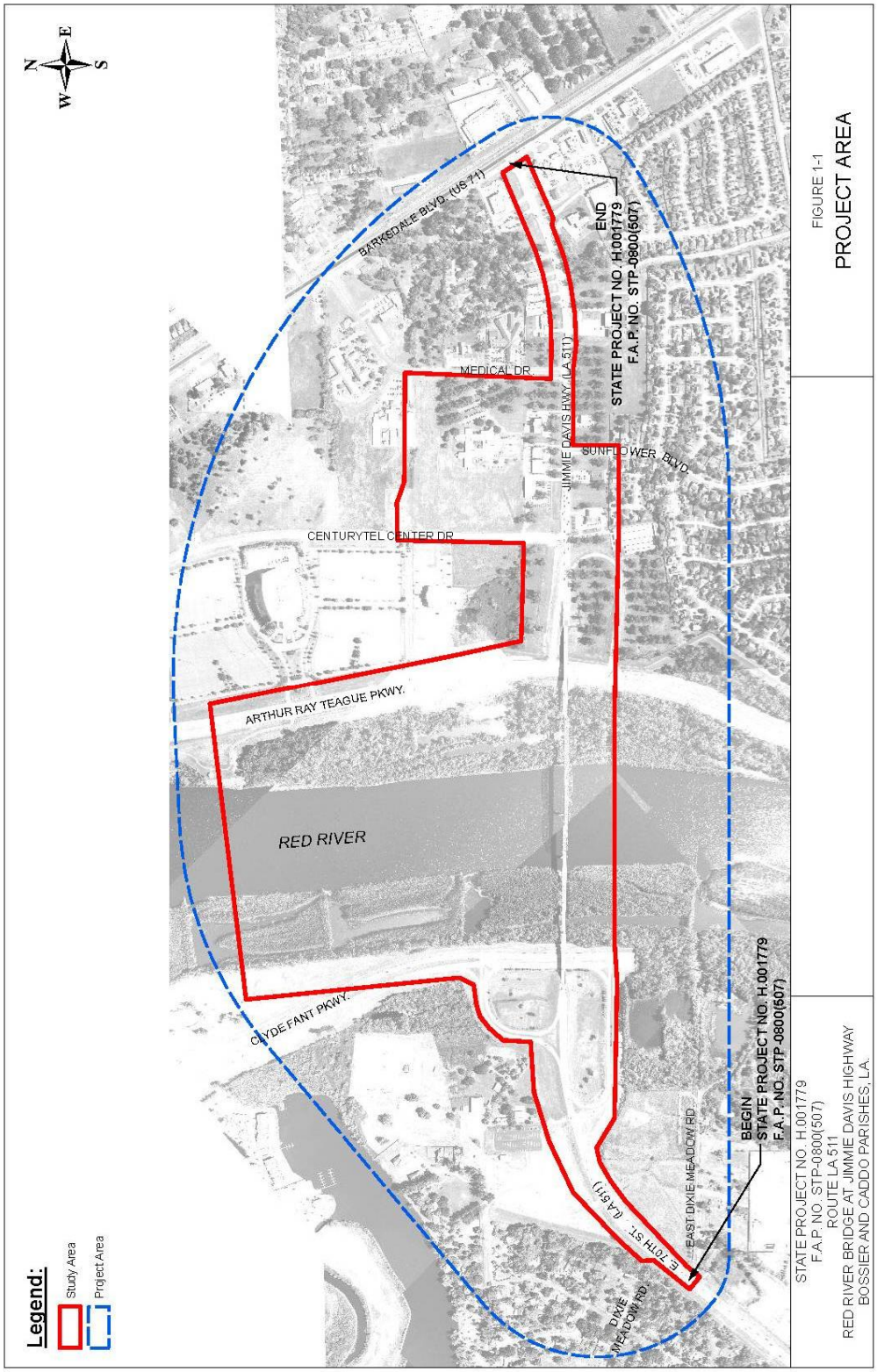

Figure 1-2. DOTD Project Delivery Process

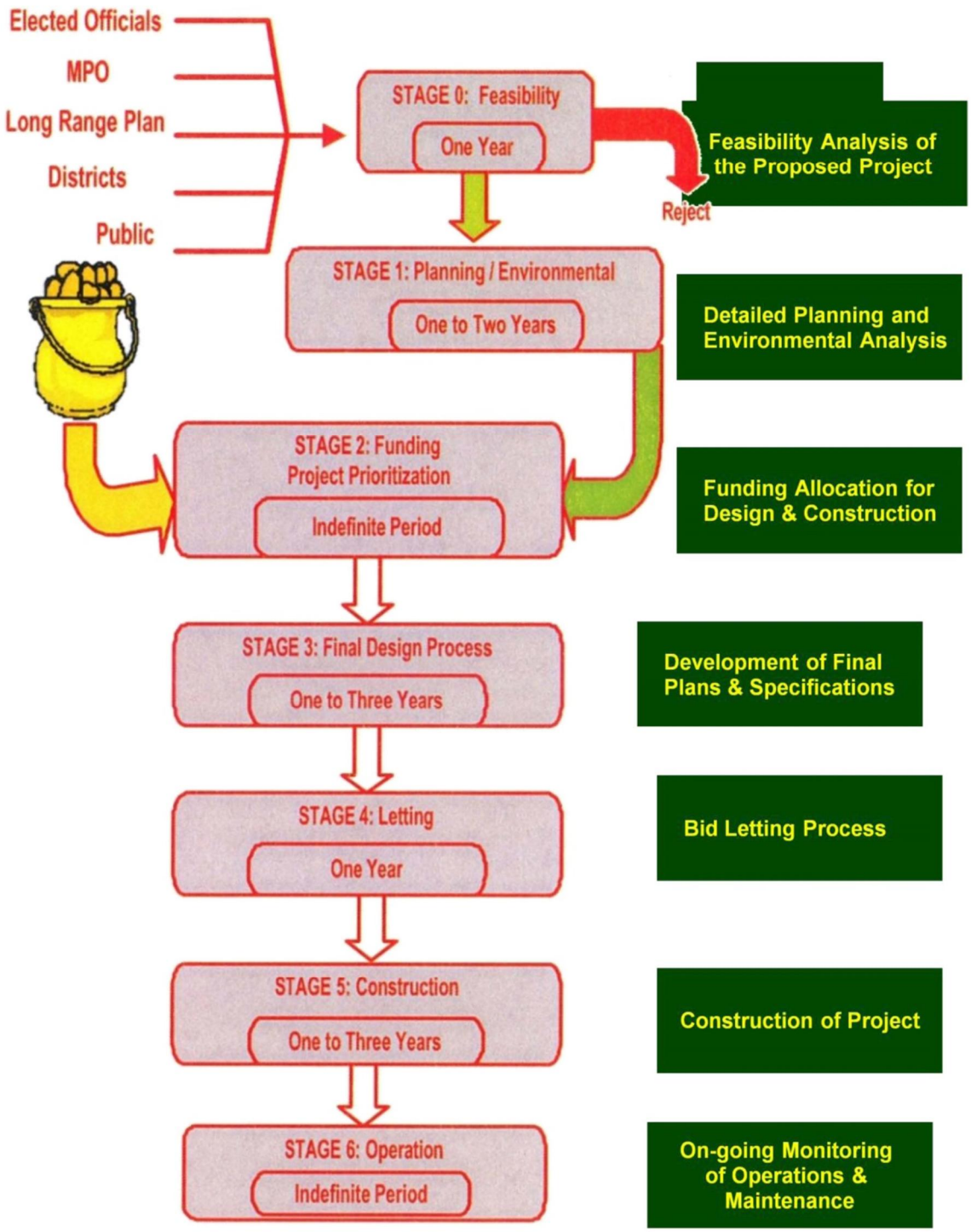

Process, *Stage 1: Detailed Planning and Environmental Analysis*. *Stage 1* is the environmental phase of the DOTD Project Delivery Process, with the goal of refining the *Stage 0* concepts and further evaluating the effects of the alternatives on the environment in accordance with the National Environmental Policy Act (NEPA).

1.3 Requirements for this Study

This EA is being prepared as a requirement of NEPA, which was enacted in 1969 to encourage sustainable development and informed decision-making. Title II of NEPA established a Council on Environmental Quality (CEQ) to provide a Federal repository, or clearinghouse, for all agency NEPA documents and to provide policy direction to Federal sponsor agencies. US Code of Federal Regulations (CFR), 40 CFR Parts 1500-1508, are the regulations to implement NEPA and are commonly known as the *CEQ regulations*. They require all Federal agencies to develop guidelines to implement NEPA. Specifically, these regulations require that every Federal action or federally funded project be evaluated on its merits by the Federal sponsor agency. Public involvement is identified as a key component of the NEPA planning process governed by these regulations. Project alternative impacts to the human, physical, and natural environment, as well as project alternative benefits, must be evaluated. Results must be presented to the public, Indian tribes, resource agencies having jurisdictional interests in the project, and other decision-makers and affected parties.

The FHWA promulgated regulations entitled "*Environmental Impact and Related Procedures*" (23 CFR Part 771) and issued guidance document T6640.8A, *Guidance for Preparing Environmental and Section 4(f) documents* (FHWA, 1987) that provide guidance for the preparation of this EA. This project must also comply with requirements of several other Federal and state laws, regulations, and executive orders that are noted throughout this document.

Based on the environmental analyses and public involvement that have been conducted to-date, the DOTD has not identified a Preferred Alternative. Selection of a Preferred Alternative was made following agency and public review of the Draft EA, including evaluation of Public Hearing comments.

A Finding of No Significant Impact (FONSI) is issued by the FHWA if it is determined that the Preferred Alternative will not have significant environmental impacts. The FONSI includes commitments and mitigation measures that are intended to minimize any unavoidable adverse impacts.

1.4 Proposed Action

The proposed project would include additional capacity across the Red River at LA 511, a full interchange between LA 511 and the Arthur Ray Teague Parkway, and a shared use trail connecting the existing trails on each side of the river. LA 511 will be upgraded to complement the Preferred Alternative for the bridge. The No-Build Alternative, two Bridge Build Alternatives, and three Build Access Alternatives were evaluated as part of this EA. An overview of the alternatives analysis process and a detailed description of the Build Alternatives are found in Chapter 2.0.

1.5 Purpose and Need

The purpose of the proposed action, which has been approved by the FHWA, is

- to increase the vehicle capacity of the crossing of the Red River at Jimmie Davis Highway (LA 511) in order to provide at least a level of service (LOS) C;
- to provide a safe river crossing for bicycles and pedestrian traffic; and
- to replace, or extend the life of, an aging bridge structure.

1.5.1 Need for Relief of Traffic Congestion

- The 2013 Average Daily Traffic (ADT) of 27,955 vehicles using the existing 2-lane bridge is expected to increase to 36,780 by 2036.
- In 2013 there is a LOS F in both directions during the AM peak and LOS E in both directions during the PM peak. With no additional capacity, there will be LOS F in both directions at both peaks in 2036. To provide a minimum LOS of C, two lanes in each direction are necessary.
- In 2013 the signalized intersection of Jimmie Davis Highway and CenturyLink Center Drive / Zach Avenue at the bottom of a five percent grade on the east bridge approach has an intersection LOS C. In 2036 the intersection is projected to have an LOS of D. The existing bridge creates a capacity constraint on the LA 511 corridor because it is a two lane link in what is otherwise a 5-lane roadway extending 5.35 miles between LA 523 and Barksdale Boulevard (US 71).

1.5.2 Need for Bicycle and Pedestrian Crossing

As indicated in regional and local plans, the community supports a connection between the Red River Bicycle Trail in Shreveport and the Arthur Ray Teague Jogging Trail in Bossier City, which terminate on either side of the Red River in the vicinity of LA 511. Currently, there is no provision for bicycles or pedestrians to cross the river at this location.

- The *Northwest Louisiana Long Range Transportation Plan Update 2009-2030* prepared by the Northwest Louisiana Council of Governments (NLCOG) includes the project engineering in the Short Range Program (FY 2013-2015) and the project construction in the Long Range Program (FY 2016 – 2030). The project is described as LA 511 (Jimmie Davis Highway) Red River crossing - New 4-lane bridge structure with Bicycle Pedestrian facilities.
- The *Bossier City Comprehensive Plan (2002)* states: Throughout the public involvement process, several recommendations were made for additional pedestrian facilities including:
  - Pedestrian crossing over the Red River
  - Connect a bike trail over to Shreveport: Jimmie Davis Bridge
- The *Shreveport-Caddo 2030 Master Plan (2010)* states: A safe and attractive pedestrian and bicycling network integrated with vehicle transportation.
  - Support a “Complete Streets” policy that provides roadway space for bicycles, pedestrians, automobiles and transit vehicles and integrates greenway and off-road bicycle routes with the roadway system.
  - Integrate pedestrian networks and bikeways into the development of public spaces and link community destinations through on and off-street facilities.

1.5.3 Need for Improved Safety

Structural:

The existing bridge is 45 years old and is showing signs of aging, including corrosion of steel members, erosion of the embankment, and cracks and spalling to the abutment walls and the deck.

Operating:

The existing 2-lane bridge does not have shoulders, sidewalks, or bicycle lanes.

1.5.4 Need for Access Improvements to Traffic Generators and Transportation Facilities

The location of the CenturyLink Center near the east approach of the bridge and the following recently completed projects are anticipated to increase traffic demand at the eastern approach.

Recent roadway improvements include construction of a 5-lane section along LA 511 from the bridge to Barksdale Boulevard (US 71), an extension of the 4-lane Arthur Ray Teague Parkway to the intersection of Barksdale Boulevard (US 71) and Sligo Road (LA 612), and exit ramps from both eastbound and westbound Jimmie Davis Highway to the Arthur Ray Teague Parkway.

PLACEHOLDER

2.0

PROJECT ALTERNATIVES

PLACEHOLDER

2.0 Project Alternatives

The National Environmental Policy Act (NEPA) requires consideration of all reasonable alternatives that could achieve the purpose and need for the project. This chapter describes the alternatives development process including the development of conceptual alternatives, refinement of the build alternatives, and selection of a preferred alternative. The No-Build Alternative also must be considered.

2.1 Alternatives Development Methodology

A tiered approach was utilized in the development of the build alternatives to meet the purpose and need. The methodology reduced the range of alternatives through consecutively more detailed analyses that included an engineering and environmental screening evaluation process. The following steps were undertaken and will be undertaken as part of the tiered alternatives process:

1. Review of Stage 0 conceptual alternatives.
2. Refinement of conceptual engineering for the conceptual alternatives provided in the Stage 0 Feasibility Study to reflect existing conditions.
3. Public review and comment on the refined Stage 0 conceptual alternatives as part of an agency meeting and a public meeting both held on August 15, 2013.
4. Preliminary evaluation of conceptual alternatives.
5. Elimination of two of the refined Stage 0 conceptual build alternatives and further refinements that led to the identification for further study of two Build Alternatives for the bridge and the interchange of LA 511 with the Arthur Ray Teague Parkway. Further refinement resulted in two Bridge Build Alternatives 5 and 7; three Access Build Alternatives A, B, and C for Jimmie Davis Highway between Arthur Ray Teague Parkway and Barksdale Boulevard; and two Trail Alternatives.
6. Refinement of the Bridge, Access, and Trail Build Alternatives that are the subject of this EA.
7. Public review and comment on the Bridge, Access, and Trail Build Alternatives and their associated impacts and benefits, which will be accomplished as part of the Public Hearing and comment period.
8. Selection of a Preferred Alternative that will combine one Bridge Build Alternative, one Access Build Alternative, and one Trail Build Alternative following the public comment period.

2.2 Stage 0 Alternatives

The *Red River Bridge at Jimmie Davis Highway Route LA 511 - Stage 0 Feasibility Study* evaluated seven conceptual alternatives for the capacity improvements to the Red River crossing of LA 511, a principal arterial. The Environmental Checklist prepared for that effort is found in Appendix A of this Draft EA. Alternatives 1, 2, and 3 were found to not be feasible during the Stage 0 Feasibility Study.[1] The four that were found to be potentially feasible are described below with the advantages and disadvantages presented in the Stage 0 Feasibility Study:

[1] *Stage 0 Feasibility Study and Environmental Inventory, Red River Bridge at Jimmie Davis highway, Route LA 511*, September 2009, states "Alternatives 1 through 3 were eliminated because key elements of the alternatives were deemed not feasible."

Alternative 4

A new four-lane bridge with a shared use trail parallel to the existing bridge with removal of the existing bridge, the proposed ramps that provide access from Jimmie Davis Highway to a planned extension of Arthur Ray Teague Parkway that have since been constructed, and signal modifications at CenturyLink Center Drive (formerly Centurytel Center Drive).

Advantages included:

- Utilizes or retains most of the surrounding planned projects.
- The second lowest cost.
- No additional ROW required.
- Shortest duration of construction.
- Replaces existing bridge with a new bridge.

Disadvantages included:

- Requires that the CenturyLink Center Drive intersection remain. No direct access from Arthur Ray Teague Parkway to Jimmie Davis Highway.
- One-way ramps to Arthur Ray Teague Parkway could encourage wrong way traffic on ramps.

Alternative 5

A new four-lane bridge with a shared use trail parallel to the existing bridge with removal of the existing bridge, the proposed ramps that provide access from Jimmie Davis Highway to a planned extension of Arthur Ray Teague Parkway that have since been constructed, new ramps that provide access from Arthur Ray Teague Parkway to Jimmie Davis Highway, removal of the signalized intersection at CenturyLink Center Drive, and a new frontage road to provide access to the south side of LA 511 west of Sunflower Boulevard.

Advantages included:

- Provides full interchange with Arthur Ray Teague Parkway.
- Eliminates intersection at CenturyLink Center Drive.
- Replaces existing bridge with a new bridge.

Disadvantages included:

- The second highest cost project.
- The longest segment of highway to be reconstructed.
- Frontage road needed to provide access to businesses on south side of Jimmie Davis Highway.

Alternative 5a

A new two-lane bridge westbound with a shared use trail parallel to the existing bridge with eastbound traffic remaining on the existing bridge, the proposed ramps that provide access from Jimmie Davis Highway to a planned extension of Arthur Ray Teague Parkway that have since been constructed, removal of the signalized intersection at CenturyLink Center Drive, and a new frontage road to provide access to the south side of LA 511 west of Sunflower Boulevard.

Advantages included:

- Provides full interchange with Arthur Ray Teague Parkway.
- Eliminates intersection at CenturyLink Center Drive.
- Utilizes the existing bridge for eastbound traffic.
- Lowest cost alternative.

Disadvantages included:

- The longest segment of highway to be reconstructed.
- Frontage road needed to provide access to businesses on south side of Jimmie Davis Highway.
- Additional right-of-way acquisition required for frontage road.

Alternative 6

A new four-lane bridge with a shared use trail parallel to the existing bridge with removal of the existing bridge, the proposed ramps that provide access from Jimmie Davis Highway to a planned extension of Arthur Ray Teague Parkway that have since been constructed, new ramps that provide access from Arthur Ray Teague Parkway to Jimmie Davis Highway, and removal of the traffic signal at CenturyLink Center Drive.

Advantages included:

- Provides full interchange with A
- Arthur Ray Teague Parkway.
- Provides access to Zach Avenue without Frontage Road.
- Can accommodate a right-in, right out intersection with CenturyLink Center Drive.

Disadvantages included:

- The highest cost project.
- Intersections of ramps with Arthur Ray Teague Parkway could confuse drivers.

2.3 Conceptual Alternatives Development

The first step in the development of the Build Alternatives for this Environmental Assessment (EA) was to review the Stage 0 alternatives. The second step was to refine the alternatives to reflect the construction work that had occurred since the completion of the Stage 0 Feasibility Study in 2009. This construction work included a five-lane section along Jimmie Davis Highway in Bossier Parish, exit ramps from both eastbound and westbound Jimmie Davis Highway to Arthur Ray Teague Parkway, and the extension of Arthur Ray Teague Parkway south of LA 511 to Sligo Road and to US 71.

These refined alternatives were presented to an Agency Meeting and a Public Meeting, both held in the project area on August 15, 2013, which constituted the third step.

The primary comments received were a sense of urgency to increase the capacity of the river crossing and a concern that the traffic signal at CenturyLink Center Drive would continue to cause congestion even if the capacity of the crossing was increased. A full report of these meetings can be found in Chapter 4.0 Comments and Coordination.

Based on the comments received, step four, the evaluation and further refinement was begun including the possibility of developing an additional alternative. At this step it was

determined that Alternative 4 should be eliminated because it did not provide a full interchange with Arthur Ray Teague Parkway and did not address the concerns regarding the signalized intersection of Jimmie Davis Highway and CenturyLink Center Drive. The other refinement in the alternatives was adjustments in the interchange ramps in Alternative 6 in an effort to reduce the construction cost.

While no new Build Alternative was proposed for the bridge, an alternative was developed for Jimmie Davis Highway, which is the segment of LA 511 in Bossier City east of the river, which replaces the five-lane section with a boulevard section including U-turns and J-turns. Both sections for Jimmie Davis Highway could be combined with any one of the remaining bridge alternatives.

Following review of these alternatives with DOTD, it was determined that the interchanges at Arthur Ray Teague Parkway in Alternatives 5 and 6 were superior to the one in 5A, especially for vehicles exiting CenturyLink Center. It was further determined that in Alternative 6, the interchange would not operate without the construction of the eastbound exit ramp as shown that would add considerable cost to the project. Therefore, it was determined that the interchange shown for Alternative 5 should be used in all alternatives. This effectively eliminated Alternative 6 because it differs from Alternative 5 only in regard to the interchange.

Following this meeting it was determined that there would be two Bridge Build Alternatives, Alternative 5 and a new Alternative 7 that combines the new two-lane bridge and the continued use of the existing bridge from Alternative 5a with the Arthur Ray Teague Parkway interchange in Alternative 5. There also would be two Access Build Alternatives east of the river, Alternative A that is the continued use of the existing five-lane section and Alternative B that provides a boulevard with U-turns and J-turns. A subsequent discussion with DOTD District 04 resulted in the development of a third Access Alternative C that is defined in Section 2.4 below.

There are two alternatives for the shared use trail. Both trail alternatives can be paired with both bridge alternatives. The shared use trial, as it crosses the river is considered as integral to the bridge. The differences between the trail alternatives are found in the connections from the bridges to the existing trailheads of the Red River Bicycle Trail on the west side of the river and the Arthur Ray Teague Jogging Trail on the east side of the river.

2.4 Description of Conceptual Build Alternatives

The Conceptual Build Alternatives evaluated in this EA, as described below, were developed following the receipt in August 2013 of agency and public comments on the Stage 0 Build Alternatives and were confirmed during a conference call with the District 04 staff and the Headquarters project staff in December 2013. Subsequently, in 2014, DOTD began implementation of State Project No. 010662, LA 511 Jimmie Davis Bridge Rehabilitation, which will improve the existing Jimmie Davis Bridge to extend its useful life for an estimated 30 years.

The rehabilitation project is the outcome of a separate study that was underway at the time that this EA was initiated. Because the viability and magnitude of the rehabilitation project had not yet been determined, the scope of this EA was to objectively evaluate the long term viability of the existing structure; it was not to assume that, because it may be rehabilitated to some extent, the DOTD was determined to retain the structure.

Due to the substantial investment into the existing structure being made through the rehabilitation project, it has been determined by FHWA and DOTD that Bridge Build

Alternative 5 is no longer under consideration as an element of the Preferred Alternative under this NEPA action. It has not been removed from this EA to demonstrate that a full range of alternatives were developed and to avoid any unnecessary delay in the completion of this NEPA process.

- Two Bridge Build Alternatives that address the roadway improvements from East Dixie Meadow Drive to CenturyLink Center Drive;
- Three Access Build Alternatives that extend from CenturyLink Center Drive to Barksdale Boulevard; these alternatives can be combined to provide four alternatives; and
- Two Trail Build Alternatives that connect the shared use trail on the bridge to the existing trailheads of the Red River Bicycle Trail and the Arthur Ray Teague Jogging Trail.

This section provides descriptions of each alternative, brief illustrated explanations of how the three types of Build Alternatives can be combined to result in 16 different plans, and an Atlas of the plans and typical sections of the Bridge, Access and Trail Build Alternatives and profiles of the Bridge Build Alternatives.

Also, each of the Bridge Build Alternatives includes two structural options, steel and concrete. These structural options do not vary for the 16 plans, but do result in the 32 different cost estimates found in Section 2.9 Preliminary Implementation Cost Estimates.

These structural options have been included in the document to illustrate feasibility and to assess potential cost. Neither option is intended to constrain the final design to select one of these two structure options if an alternate structural option is found to be preferable. Similarly, the geometry presented for the Bridge, Access, and Trail Build Alternatives in this EA is being used to define the potential environmental effects of a general footprint of the project, but the alignments can be modified within that general footprint during final design.

Bridge Build Alternative 5

This Bridge Alternative would include a new four-lane bridge approximately 3,120 feet long with main spans at the river and approach spans on both ends. The width would vary from 92'-1½" at the west approach span to 104'-1½" at the main span as it transitions to the east approach span. The proposed roadway profile is raised for the new bridge to maintain the existing minimum vertical clearance of 66 feet from the normal pool required by the USCG in an electronic communication dated December 2, 2013, that is found in Appendix E. The concrete construction option would provide 67.58 feet, and the steel construction option would provide 71.86 feet. The longitudinal grade at the west approach is +4.0%, and at the east approach is -4.5%. It would include a shared use trail[2] on the north side with connections via the Trail Build Alternatives to the existing trails on both sides of the Red River. The bridge would be a girder bridge and has been studied using both steel and concrete structural options. A truss bridge was not studied as, in general, the DOTD does not plan to construct truss bridges in the future because they are relatively more costly to

[2] The design criteria for development of the shared use trail for both Alternative 5 and Alternative 7 are compliant with the 1990 Americans with Disabilities Act (ADA) and the subsequent 2011 Public Right of Way Accessibility Guidelines (PROWAG), United States Access Board. Furthermore, the proposed technical provisions applicable to shared used paths in the proposed accessibility guidelines for pedestrian facilities in the public right-of-way, as augmented by the supplemental notice of proposed rulemaking (SNPRM) is consistent with the design criteria for shared used paths developed in the American Association of State Highway and Transportation Officials (AASHTO) "Guide for the Development of Bicycle Facilities" (2012). The design criteria also are informed by FHWA Part II of II: Best Practices Design Guide – Sidewalks2 – Bicycle and Pedestrian; AASHTO LRFD Bridge Design Specifications (2012 Edition with 2013 revisions), and LRFD Guide Specifications for the Design of Pedestrian Bridges (2009 Edition).

construct, inspect, and maintain and because they lack redundancy. No design exceptions are required.

Plans and typical sections, one for each construction option, are presented on Atlas Sheets 1 through 6, and the profiles of the steel and concrete construction options are presented on Sheet 26. See below and Section 3.7 for additional information on the shared use trail.

The design life of the span would be 75 years, based on current bridge design codes (AASHTO LRFD). Under Alternative 5, the existing bridge would no longer be in service. Also, there would be a proposed full interchange with Arthur Ray Teague Parkway that includes 1) a westbound exit ramp at-grade that connects to the existing slip ramp exit; 2) a westbound entrance ramp that is a loop ramp beginning north of the existing intersection of the exit ramp; 3) a new eastbound exit ramp that would be constructed inside the radius of the existing eastbound exit ramp, and 4) a new eastbound entrance ramp that would utilize a portion of the existing eastbound exit ramp at the Parkway and would connect to Jimmie Davis Highway as an auxiliary lane generally at the existing intersection of Zach Avenue. Alternative 5 would provide roadway lighting on the new bridge.

On the west side of the river, Alternative 5 would require a bulb out on the south side of East 70th Street, which is the segment of LA 511 in Shreveport, to accommodate a U-turn farther west to provide vehicles exiting from the Riverpark Church property with access to the eastbound exit ramp leading to the Clyde Fant Parkway. This would be needed because the center lane of the five-lane roadway would be narrowed at the relocated exit driveway to align with the new bridge.

Bridge Build Alternative 7

This Bridge Alternative would include a new two-lane bridge north of the existing bridge, for westbound traffic, also approximately 3,120 feet long with main spans at the river and approach spans on both ends. The width would vary from 54'-5½" at the west approach span to 66'-5½" at the main span as it transitions to the east approach span. The proposed roadway profile is raised for the new bridge to maintain the existing minimum vertical clearance of 66 feet from the normal pool required by the USCG in an electronic communication dated December 2, 2013, that is found in Appendix E. The concrete construction option would provide 67.58 feet, and the steel construction option would provide 71.86 feet. The longitudinal grade at the west approach is +4.0%, and at the east approach is -4.5%. It also would include a shared use trail on the north side with connections to the existing trails via the Trail Build Alternatives on both sides of the Red River. The bridge would be a girder bridge and has been studied using both steel and concrete structural options. A truss bridge was not studied as, in general, the DOTD does not plan to construct truss bridges in the future because they are relatively more costly to construct, inspect, and maintain and because they lack redundancy. No design exceptions are required.

Plans and typical sections, one for each construction option, are presented on Atlas Sheets 11 through 16, and the profiles of the steel and concrete construction options are presented on Sheet 26. See below and Section 3.7 for additional information on the shared use trail.

The design life of the span would be 75 years, based on current bridge design codes (AASHTO LRFD). Under Alternative 7, the existing bridge would remain in service to provide two lanes for eastbound traffic. Alternative 7 would benefit from a current rehabilitation program to extend the useful life of the existing bridge for an anticipated remaining service life of at least 30 years. This project will include the provision of roadway lighting. Alternative 7 would provide a full interchange with Arthur Ray Teague Parkway that would differ from Alternative 5 only to the extent that the different bridge alignment would require slightly different connections to the mainline of LA 511, but there would be no operational

differences. No changes on the west side would be required because the median of the existing roadway would not be narrowed.

Access Build Alternative A

This Access Alternative would maintain the existing five-lane section along Jimmie Davis Highway. The plan and section are shown on Atlas Sheets 19 and 20. Changes on the north side of the road would include the elimination of the signalized intersection with CenturyLink Boulevard and the construction of a right-in / right-out intersection with the westbound exit ramp. This also closes two driveways to existing commercial properties. Changes on the south side of the road would include the elimination of the Zach Avenue intersection as a result of the auxiliary lane of the eastbound entrance ramp. This requires the addition of a new roadway parallel to Jimmie Davis Highway along the rear of the properties facing it between Zach Avenue and Sunflower Boulevard. The new roadway would provide access to these properties and to a property on Zach Avenue. The signalized intersection at Sunflower Boulevard would remain. No design exceptions are required.

Access Build Alternative B

This Access Alternative would reconstruct Jimmie Davis Highway with a boulevard section, within existing right of way. The plan and section are shown on Atlas Sheets 21 and 22. The through eastbound lanes would remain unchanged. The conditions at CenturyLink Center Drive and Zach Avenue and the new roadway to the rear of properties on the south side would be the same as in Alternative A. The multi-phase signalized intersection at Sunflower Boulevard would be replaced with a channelized intersection for westbound vehicles turning left and a two-phase signal would be installed to control this turn. Vehicles turning westbound from Sunflower Boulevard would instead turn right and then proceed to a new two-phase signalized U-turn farther to the east. There also would be a westbound U-turn between Sunflower Boulevard and Medical Drive and an eastbound U-turn just west of Barksdale Boulevard. No design exceptions are required.

Access Build Alternative C

This Access Alternative would provide a new roadway, approximately 1300 feet long, connecting CenturyLink Center Drive and Medical Drive to provide for vehicles traveling between CenturyLink Center and Barksdale Boulevard to reach Jimmie Davis Highway. This roadway would be a three-lane extension of Reeves Marine Drive. The three-lane alignment is proposed because the left turn lanes at each intersection would be close together and because, as the adjacent land is currently vacant, this alignment would accommodate future development.

Construction of this new road would be combined with either the five-lane section in Alternative A or the boulevard section in Alternative B, but would replace the right-in / right-out intersection of CenturyLink Boulevard and the westbound exit ramp with a cul-de-sac at a termination of CenturyLink Boulevard north of the intersection. Atlas Sheet 23 shows Alternative C combined with Alternative A and Atlas Sheet 24 shows Alternative C combined with Alternative B. Atlas Sheet 25 shows the typical section of the new roadway.

Alternative C would permit the exit ramp to begin farther west and would allow the driveways on the north side that are closed in Alternatives A and B to remain open, and the elimination of the intersection of CenturyLink Center Drive with Jimmie Davis Highway would improve the operation of Jimmie Davis Highway.

Trail Build Alternative 1

Trail Alternative 1 was shown in concept in the Stage 0 Alternatives. On the west side of the Red River it is aligned between the Clyde Fant Parkway and the river from the bridge to the existing trailhead of the Red River Bicycle Trail for a distance of approximately 2,165 feet. Approximately 898 feet of this distance would be elevated on structure and the remainder would be at grade. The right-of-way would occupy approximately 2.229 acres entirely within the right-of-way of the Clyde Fant Parkway.

On the east side, it is similarly aligned between the Arthur Ray Teague Parkway and the river from the bridge to the existing trailhead of the Arthur Ray Teague Jogging Trail for a distance of approximately 2,851 feet and is elevated for approximately 845 feet. The right-of-way would occupy approximately 2.618 acres of which 0.396 acres would be purchased from the Red River Waterway Commission and the remainder would be within the right-of-way of the Arthur Ray Teague Parkway.

This alignment results in the construction of structures separate from the main bridge to provide for the elevation of the at-grade trail to the bridge. Atlas Sheet 7 presents this trail with Bridge Build Alternative 5 and Sheet 17 presents it with Bridge Build Alternative 7. Sections of both Trail Alternatives are shown on Atlas Sheets 9 and 10.

Trail Alternative 2

Trail Alternative 2 is aligned alongside, and is terminated with, the bridge structure. On the west side, after crossing the Clyde Fant Parkway, the mainline of LA 511 and the exit ramp connecting westbound traffic to the Parkway are on a fill section. Trail Alternative 2 will remain adjacent to the structure and the ramp on structure and on fill to a point approximately 187 feet west of the Parkway. From that point, it will turn south to a point sufficiently removed from the ramp terminal to cross the Parkway at grade and would then turn north between the Parkway and the river to join the existing trailhead of the Red River Bicycle Trail. It would extend approximately 2,693 feet from the end of the westbound exit ramp of the bridge to the existing trailhead of the Red River Bicycle Trail of which all would be at grade. The right-of-way would occupy approximately 1.880 acres entirely within the right-of-way of the Clyde Fant Parkway.

On the east side it would be adjacent to the structure of the entrance ramp from the Arthur Ray Teague Parkway to westbound LA 511. Upon reaching grade, it would curve counterclockwise to pass under the entrance ramp and continue north to the access drive of the CenturyLink Center where it would cross the parkway to join the existing trailhead of the Arthur Ray Teague Jogging Trail. It would extend at grade approximately 4,224 feet from the end of the westbound entrance ramp of the bridge to the existing trailhead. The right-of-way would occupy approximately 2.885 acres of which 0.399 acres would be purchased from the Red River Waterway Commission and the remainder would be within the right-of-way of the Arthur Ray Teague Parkway.

Atlas Sheet 8 presents this trail with Bridge Build Alternative 5 and Sheet 18 presents it with Bridge Build Alternative 7. Sections of both Trail Alternatives are shown on Atlas Sheets 9 and 10.

Figure 2-1 provides sketches of the 16 possible combinations of the Bridge, Access, and Trail Build Alternatives that could be selected as the Preferred Alternative. As stated above, the Atlas shows each alternative in greater detail.

Figure 2-1. Sketches of Sixteen (16) Alternative Combinations

Bridge Alternative 5, Trail Alternative 1 and Access Alternative A with Access Alternative C

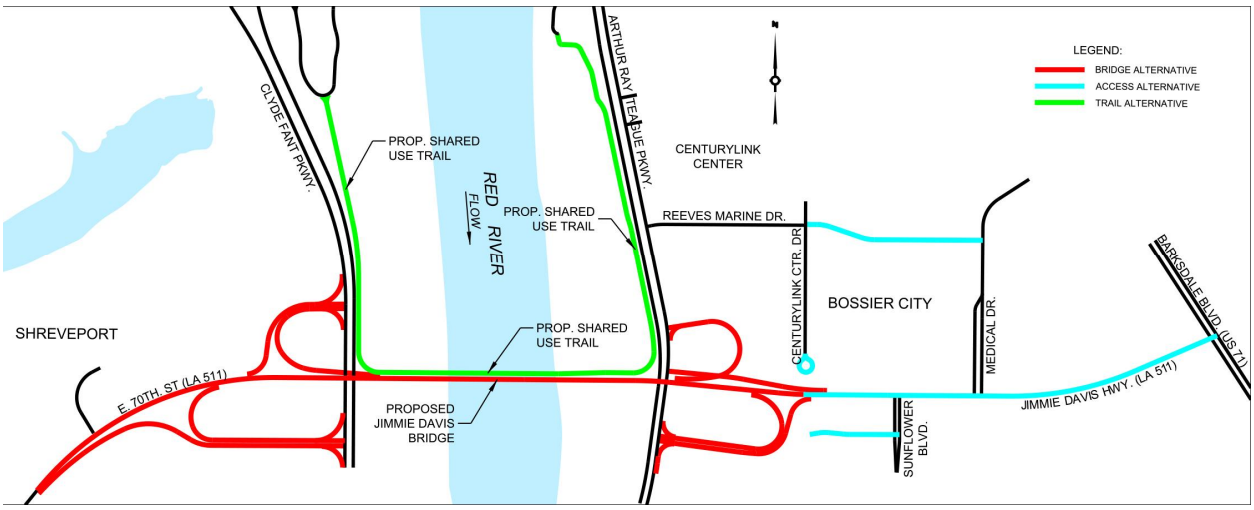

Bridge Alternative 5, Trail Alternative 2 and Access Alternative A with Access Alternative C

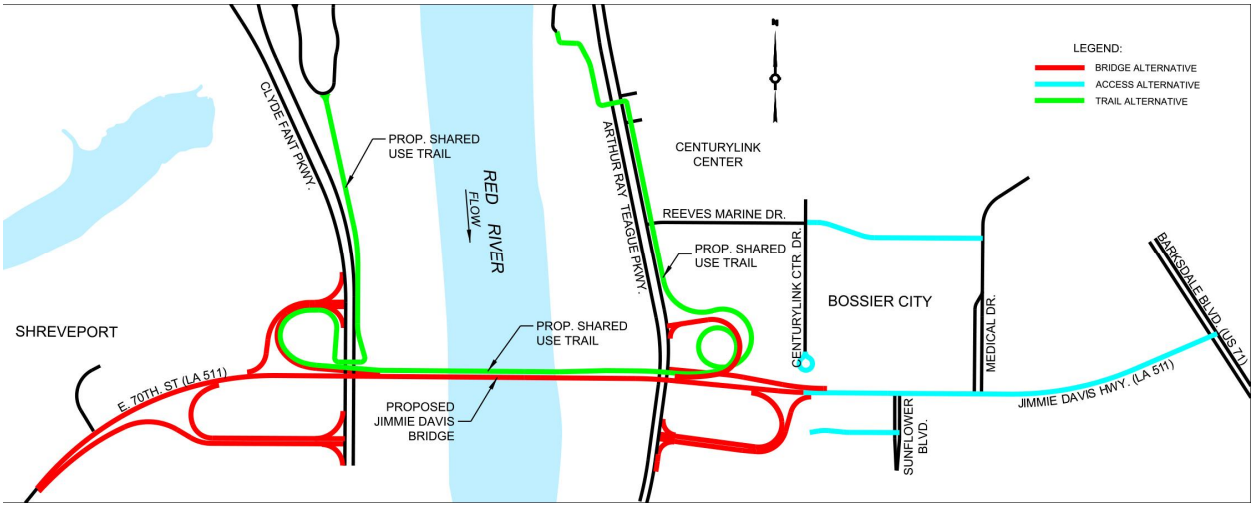

Bridge Alternative 5, Trail Alternative 1, and Access Alternative A without Access Alternative C

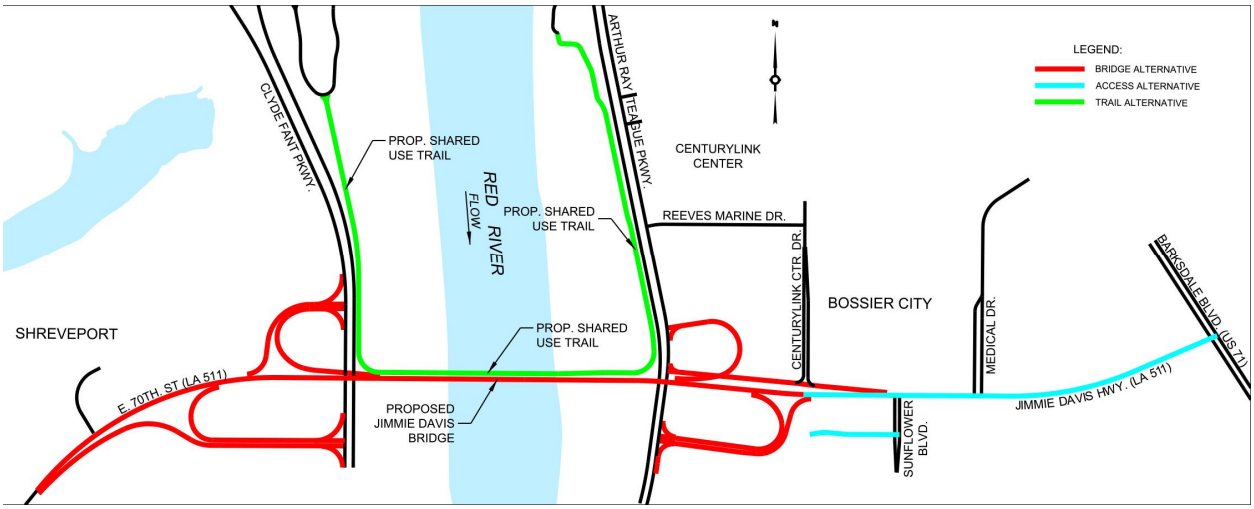

Bridge Alternative 5, Trail Alternative 2 and Access Alternative A without Access Alternative C

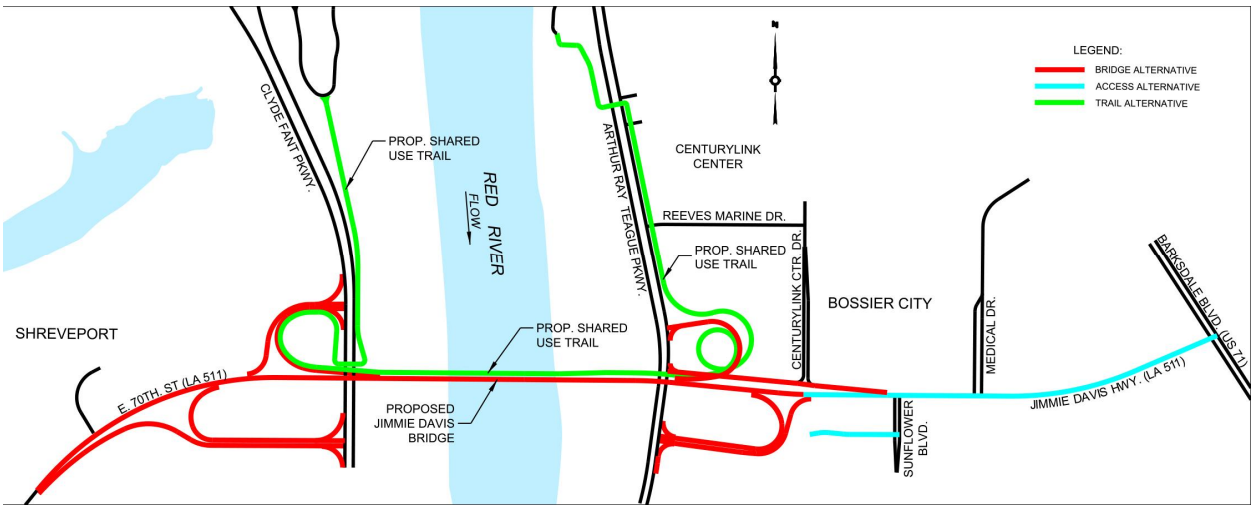

Bridge Alternative 5, Trail Alternative 1 and Access Alternative B with Access Alternative C

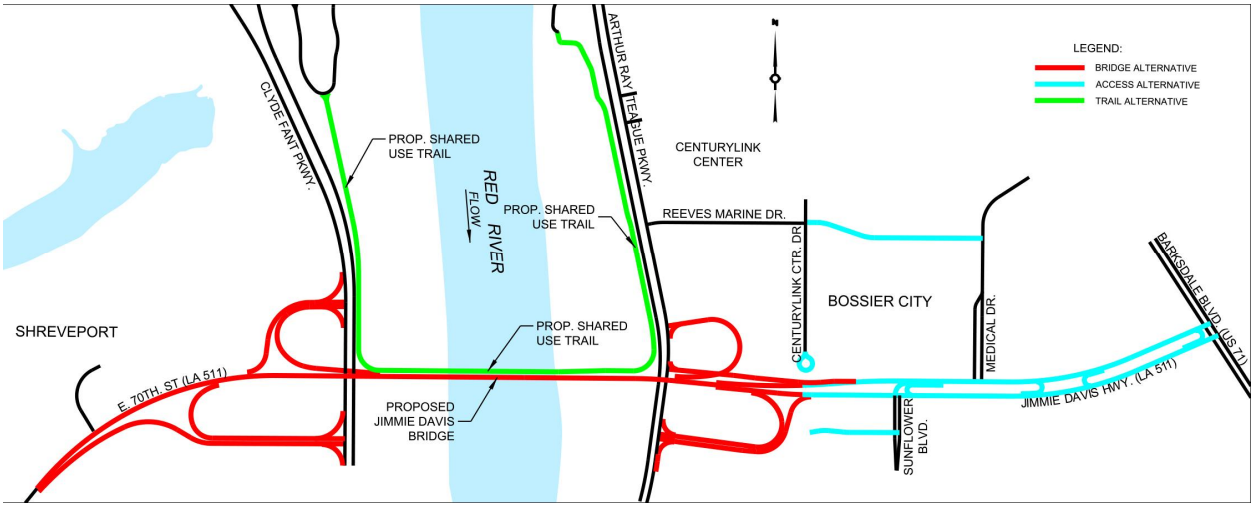

Bridge Alternative 5, Trail Alternative 2 and Access Alternative B with Access Alternative C

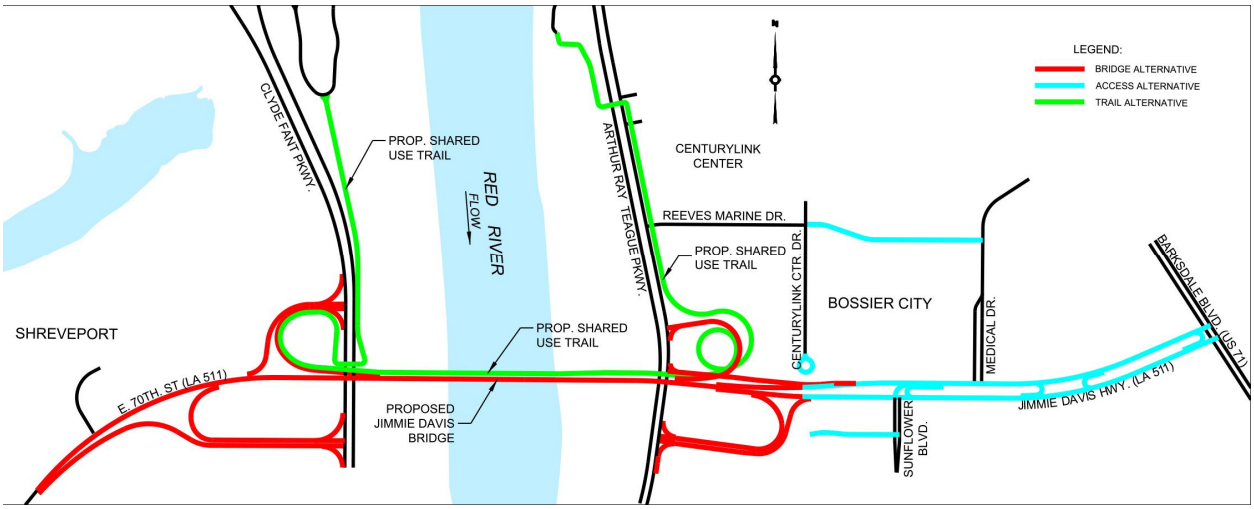

Bridge Alternative 5, Trail Alternative 1 and Access Alternative B without Access Alternative C

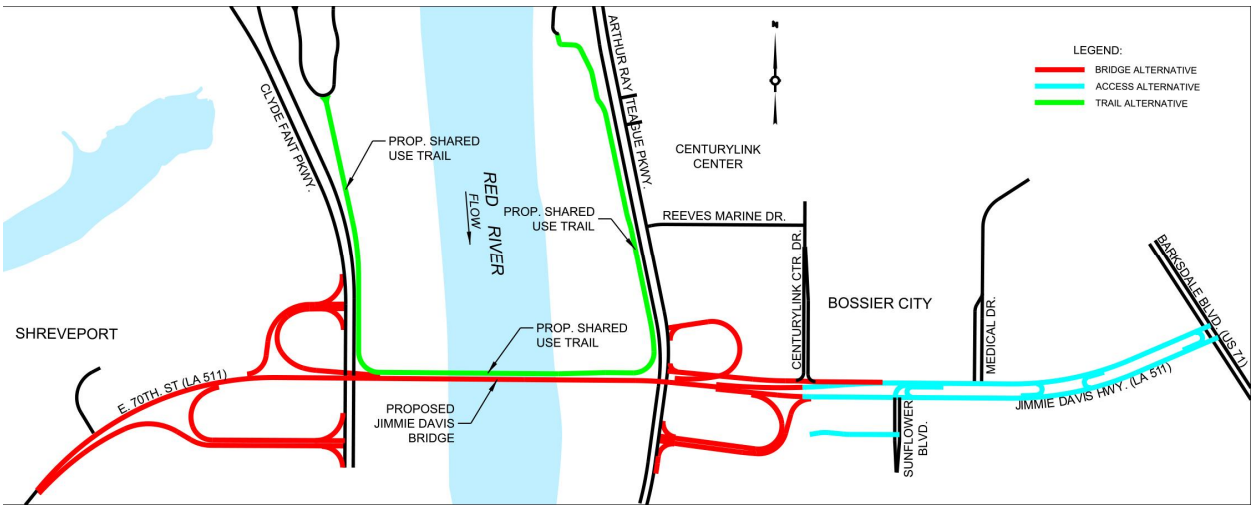

Bridge Alternative 5, Trail Alternative 2 and Access Alternative B without Access Alternative C

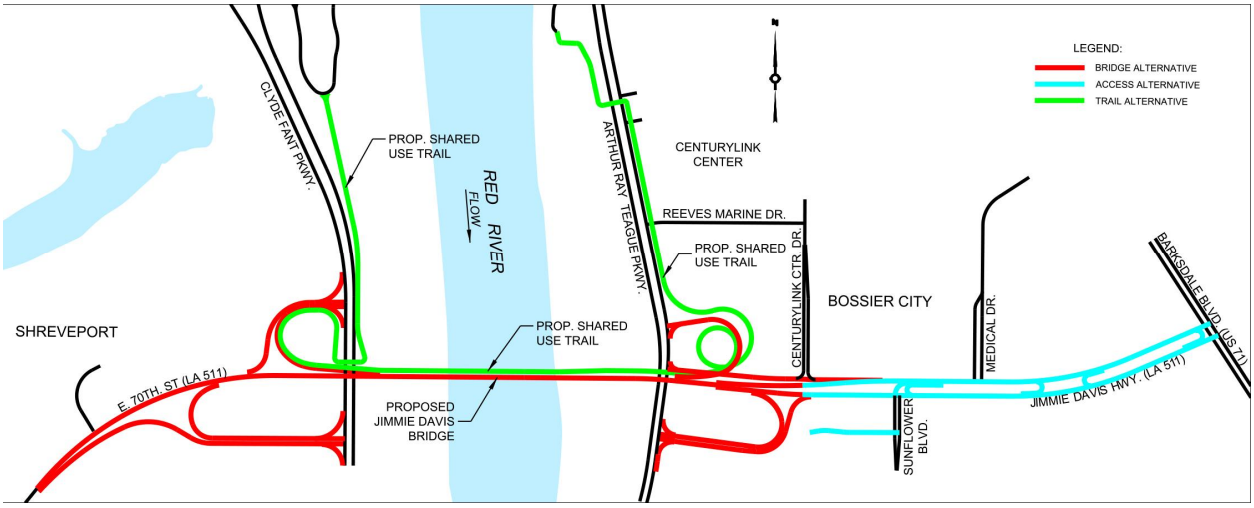

Bridge Alternative 7, Trail Alternative 1 and Access Alternative A with Access Alternative C

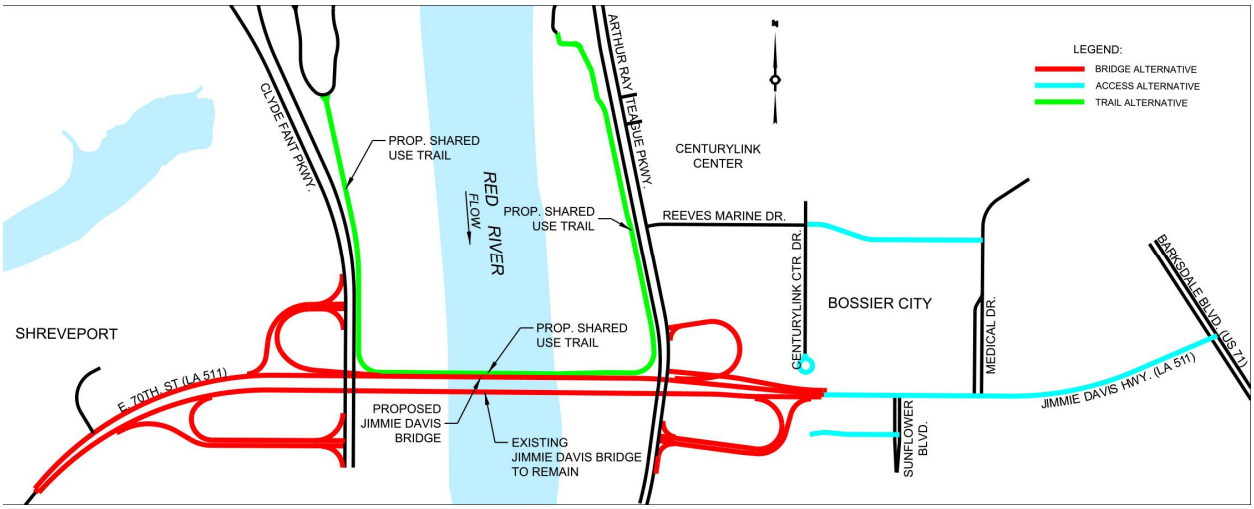

Bridge Alternative 7, Trail Alternative 2 and Access Alternative A with Access Alternative C

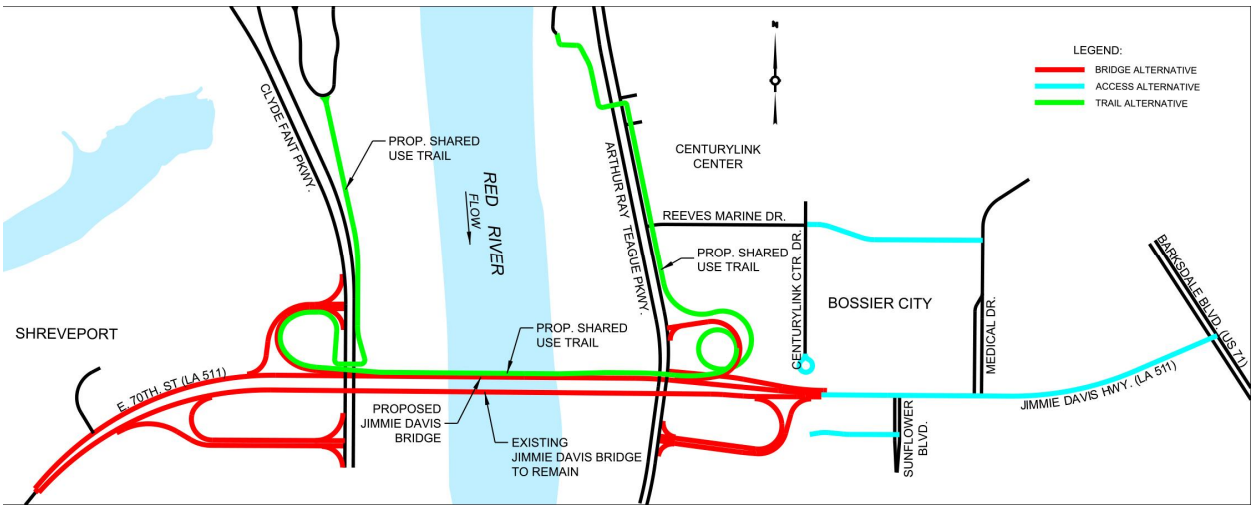

Bridge Alternative 7, Trail Alternative 1 and Access Alternative A without Access Alternative C

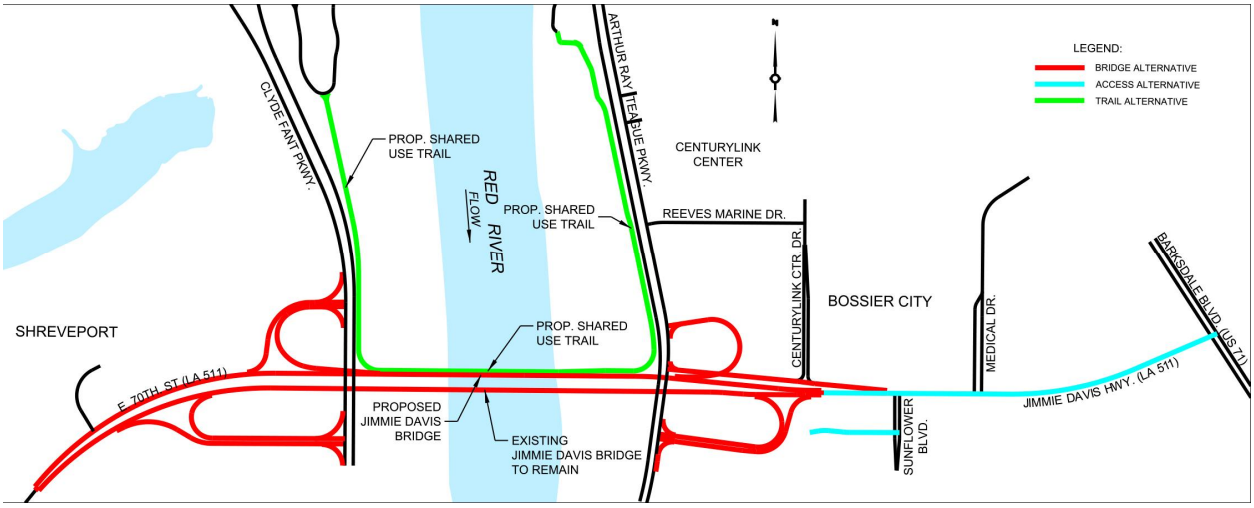

Bridge Alternative 7, Trail Alternative 2 and Access Alternative A without Access Alternative C

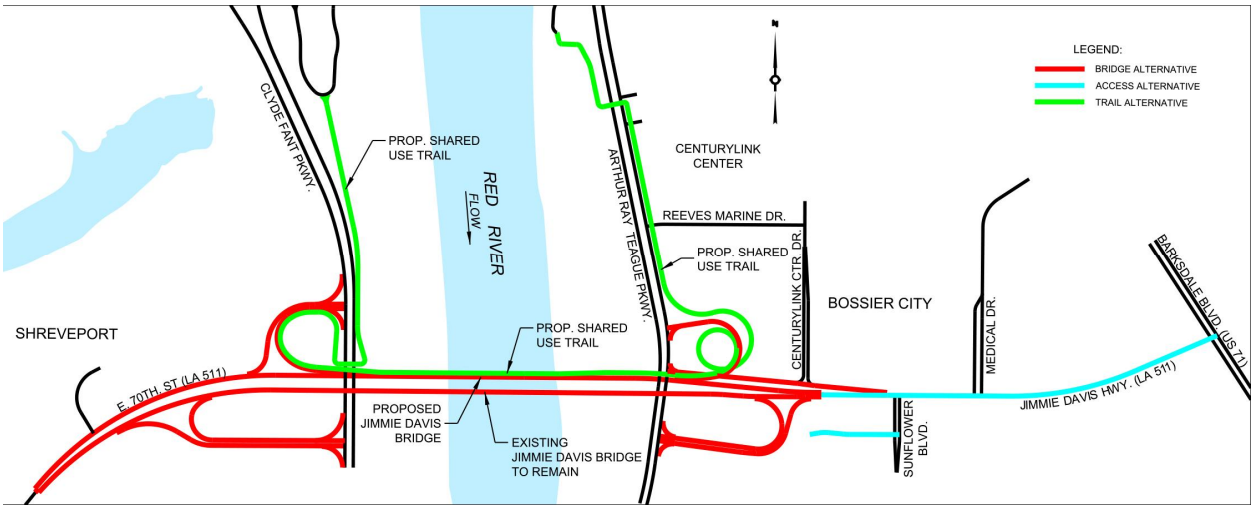

Bridge Alternative 7, Trail Alternative 1 and Access Alternative B with Access Alternative C

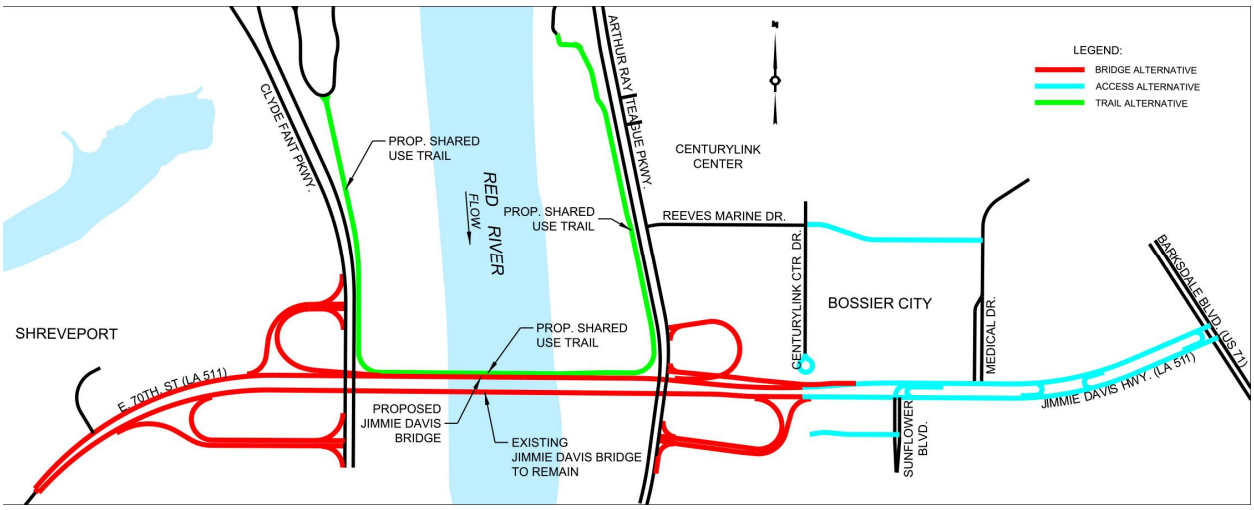

Bridge Alternative 7, Trail Alternative 2 and Access Alternative B with Access Alternative C

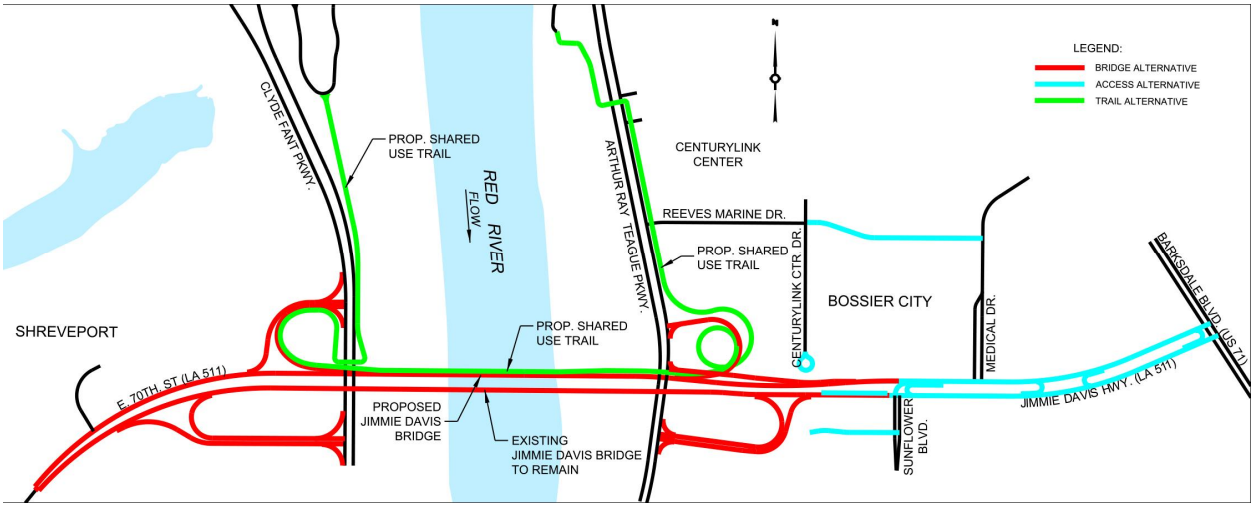

Bridge Alternative 7, Trail Alternative 1 and Access Alternative B without Access Alternative C

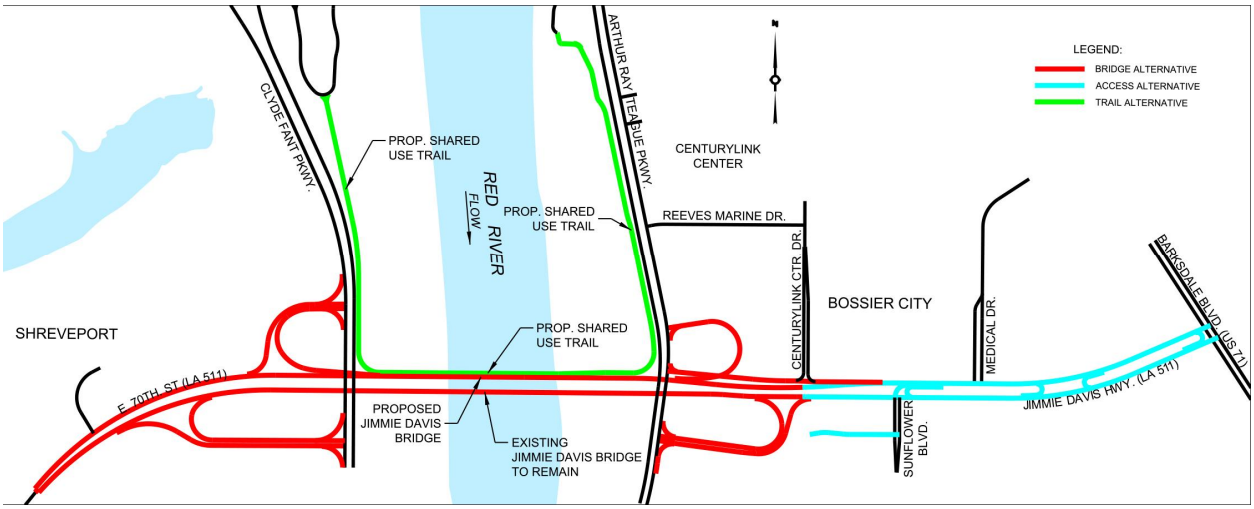

Bridge Alternative 7, Trail Alternative 2 and Access Alternative B without Access Alternative C

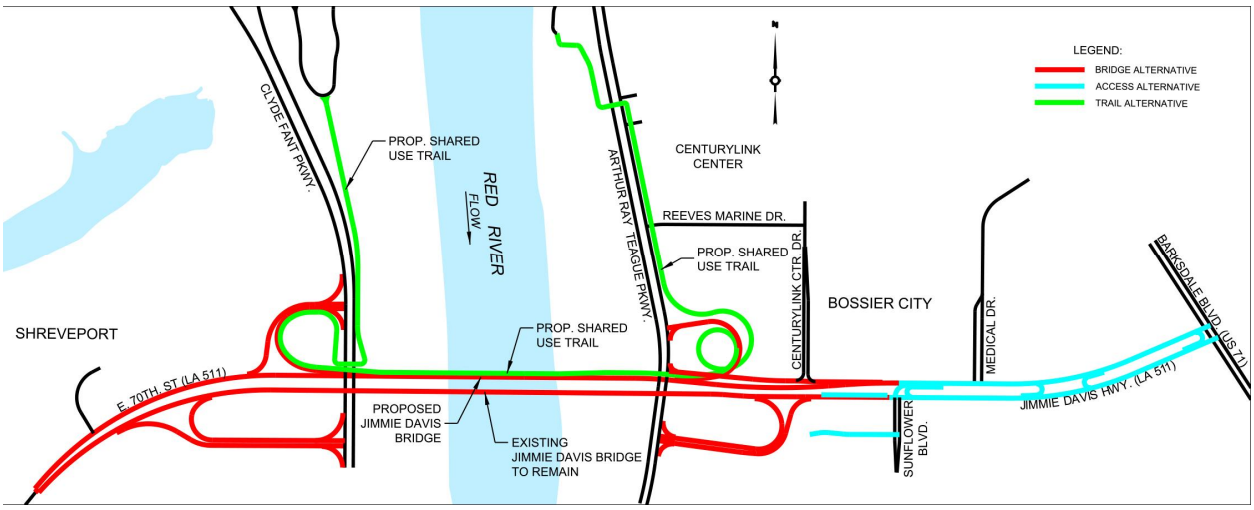

SHREVEPORT

BEGIN
STATE PROJECT NO. H.001779
F.A.P. NO. STP-0800(507)
PROJ. ℄ STA. 10+00

N

HAMEL'S PARK/ RIVERPARK CHURCH

DRIVEWAY TO LA 511 CURRENTLY CLOSED

RAISED MEDIAN SECTION

CONCRETE BARRIER SECTION

EXIST. & REQ'D. R/W & C/A

RAMP A4

PROP. SHARED USE TRAIL

RAMP A3

35+00

40+00

30+00

25+00

20+00

15+00

10+00

EXIST. & REQ'D. R/W & C/A

LIMIT C/A

E. 70TH ST. (LA 511)

RAMP A2

PT = 34+29.15

CLYDE FANT PKWY.

EXIST. & REQ'D. R/W

MATCHLINE STA. 43+50

RAMP A1

℄ PROPOSED E. 70TH ST. (LA 511)

EXIST. & REQ'D. R/W & C/A

5-LANE SECTION

DIXIE MEADOW RD.

EXIST. & REQ'D. R/W

LIMIT C/A

PC = 13+73.95

CADDO PARISH

BOSSIER PARISH

E. DIXIE MEADOW RD.

LEGEND:

- EXISTING ROADWAY (TO REMAIN)
- REMOVAL
- NEW AT GRADE ROADWAY AND TRAIL
- NEW ELEVATED ROADWAY AND TRAIL
- REQ'D R/W & C/A

DOTD
LOUISIANA DEPARTMENT OF TRANSPORTATION & DEVELOPMENT

STATE PROJECT NO. H.001779
F.A.P. NO. STP-0800(507)
ROUTE LA 511
RED RIVER BRIDGE AT JIMMIE DAVIS HIGHWAY
CADDO AND BOSSIER PARISHES

BRIDGE BUILD ALTERNATIVE 5

WITH SHARED USED TRAIL BUILD ALT. 1
(ATLAS SHEET 1 OF 26)

400 200 100 0 100 200 400

DATE: 08/26/2014

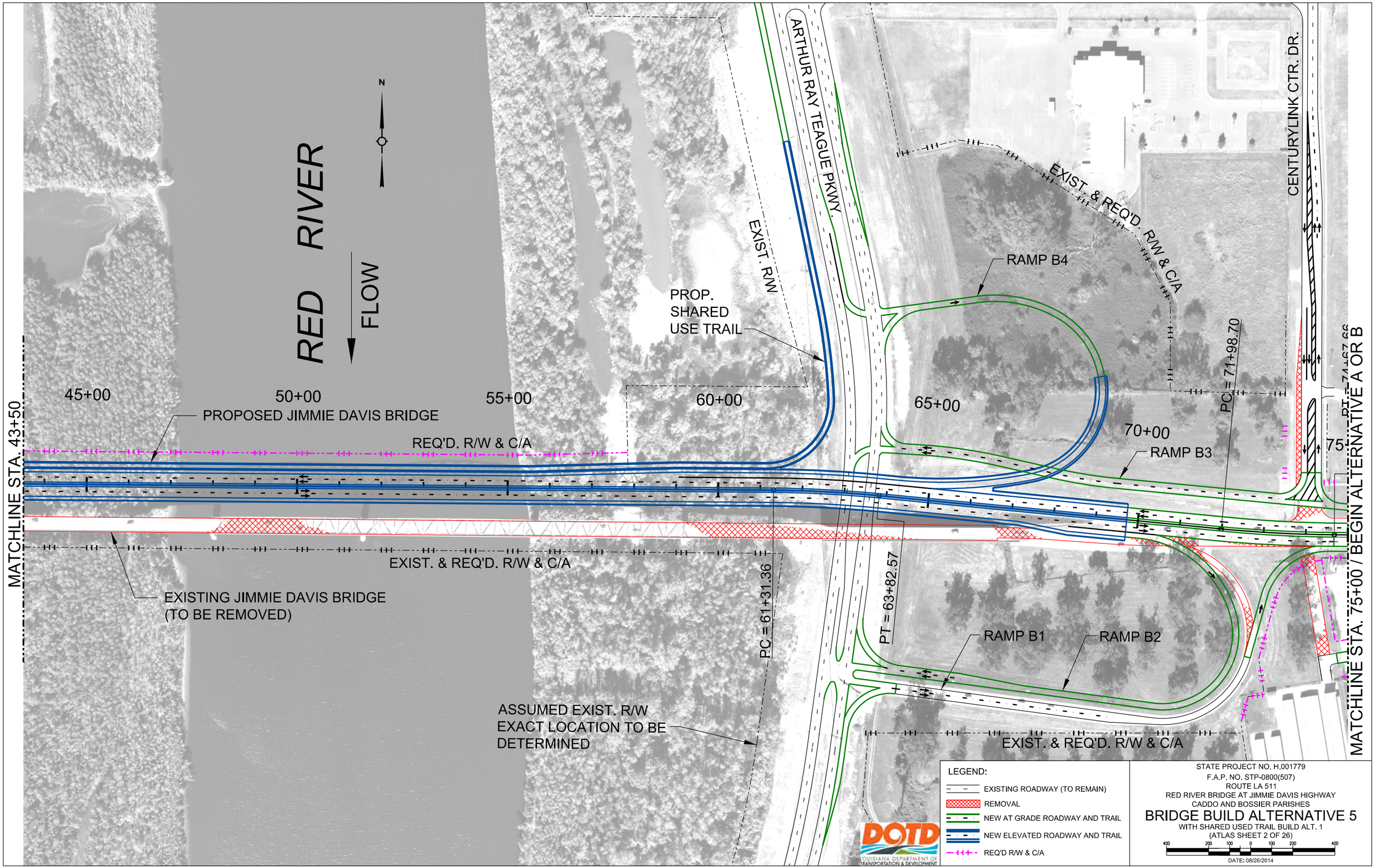
RED RIVER
FLOW
N
MATCHLINE STA. 43+50
45+00
50+00
55+00
60+00
65+00
70+00
75+
PROPOSED JIMMIE DAVIS BRIDGE
REQ'D. R/W & C/A
EXIST. & REQ'D. R/W & C/A
EXISTING JIMMIE DAVIS BRIDGE
(TO BE REMOVED)
PROP.
SHARED
USE TRAIL
EXIST. R/W
ARTHUR RAY TEAGUE PKWY.
EXIST. & REQ'D. R/W & C/A
CENTURYLINK CTR. DR.
RAMP B4
RAMP B3
RAMP B1
RAMP B2
PC = 71+98.70
PT = 63+82.57
PC = 61+31.36
ASSUMED EXIST. R/W
EXACT LOCATION TO BE
DETERMINED
EXIST. & REQ'D. R/W & C/A
MATCHLINE STA. 75+00 / BEGIN ALTERNATIVE A OR B
LEGEND:
EXISTING ROADWAY (TO REMAIN)
REMOVAL
NEW AT GRADE ROADWAY AND TRAIL
NEW ELEVATED ROADWAY AND TRAIL
REQ'D R/W & C/A
DOTD
LOUISIANA DEPARTMENT OF TRANSPORTATION & DEVELOPMENT
STATE PROJECT NO. H.001779
F.A.P. NO. STP-0800(507)
ROUTE LA 511
RED RIVER BRIDGE AT JIMMIE DAVIS HIGHWAY
CADDO AND BOSSIER PARISHES
BRIDGE BUILD ALTERNATIVE 5
WITH SHARED USED TRAIL BUILD ALT. 1
(ATLAS SHEET 2 OF 26)
400 200 100 0 100 200 400
DATE: 08/26/2014

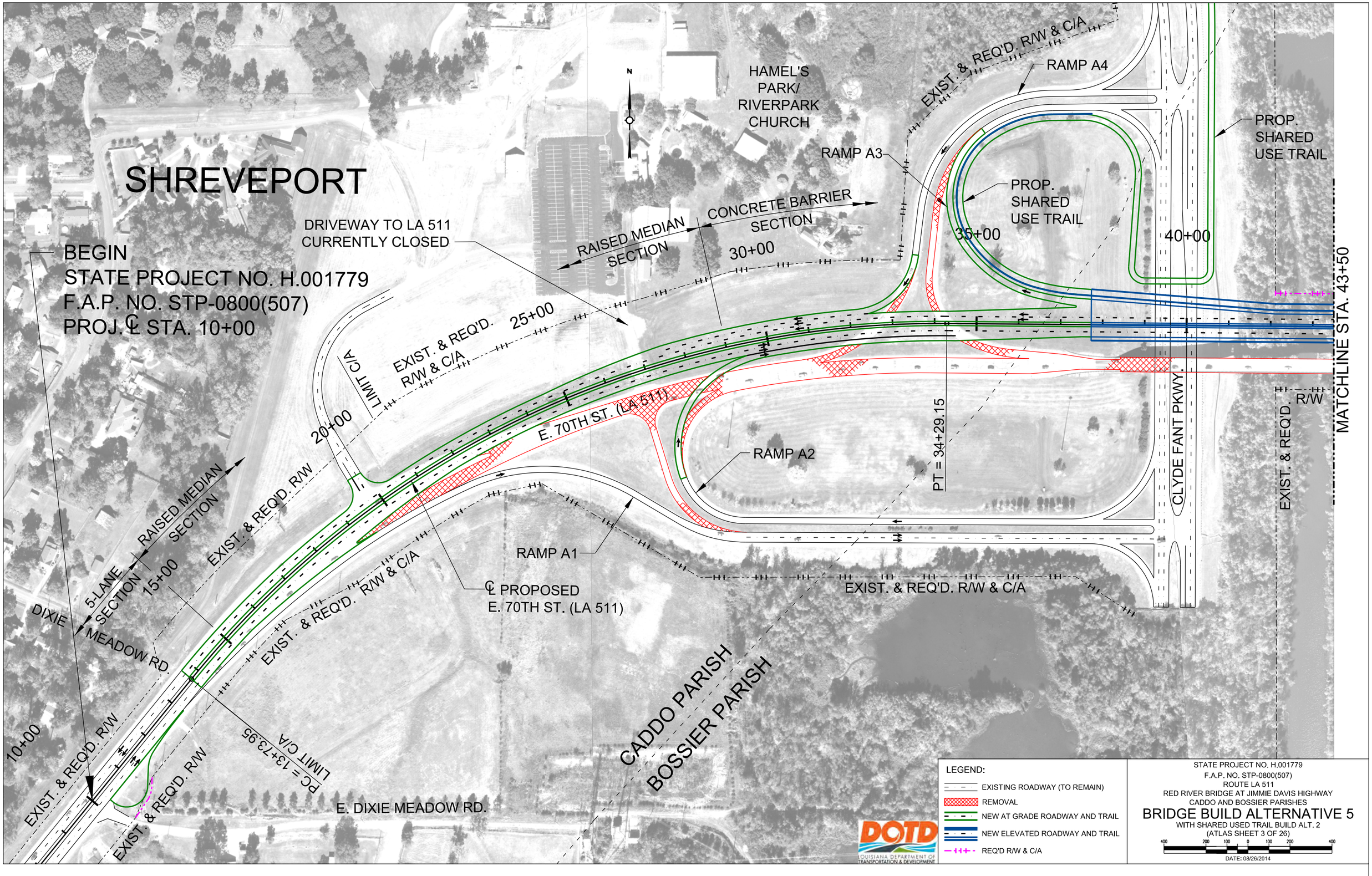
SHREVEPORT
BEGIN
STATE PROJECT NO. H.001779
F.A.P. NO. STP-0800(507)
PROJ. ℄ STA. 10+00
DRIVEWAY TO LA 511
CURRENTLY CLOSED
HAMEL'S
PARK/
RIVERPARK
CHURCH
N
RAMP A4
EXIST. & REQ'D. R/W & C/A
RAMP A3
PROP.
SHARED
USE TRAIL
PROP.
SHARED
USE TRAIL
CONCRETE BARRIER
SECTION
RAISED MEDIAN
SECTION
30+00
35+00
40+00
25+00
EXIST. & REQ'D.
R/W & C/A
LIMIT C/A
20+00
E. 70TH ST. (LA 511)
RAMP A2
PT = 34+29.15
CLYDE FANT PKWY.
EXIST. & REQ'D. R/W
MATCHLINE STA. 43+50
RAISED MEDIAN
SECTION
EXIST. & REQ'D. R/W
RAMP A1
5-LANE
SECTION
15+00
EXIST. & REQ'D. R/W & C/A
℄ PROPOSED
E. 70TH ST. (LA 511)
EXIST. & REQ'D. R/W & C/A
DIXIE
MEADOW RD.
CADDO PARISH
BOSSIER PARISH
10+00
EXIST. & REQ'D. R/W
EXIST. & REQ'D. R/W
PC = 13+73.95
LIMIT C/A
E. DIXIE MEADOW RD.
LEGEND:
EXISTING ROADWAY (TO REMAIN)
REMOVAL
NEW AT GRADE ROADWAY AND TRAIL
NEW ELEVATED ROADWAY AND TRAIL
REQ'D R/W & C/A
DOTD
LOUISIANA DEPARTMENT OF
TRANSPORTATION & DEVELOPMENT
STATE PROJECT NO. H.001779
F.A.P. NO. STP-0800(507)
ROUTE LA 511
RED RIVER BRIDGE AT JIMMIE DAVIS HIGHWAY
CADDO AND BOSSIER PARISHES
BRIDGE BUILD ALTERNATIVE 5
WITH SHARED USED TRAIL BUILD ALT. 2
(ATLAS SHEET 3 OF 26)
400 200 100 0 100 200 400
DATE: 08/26/2014

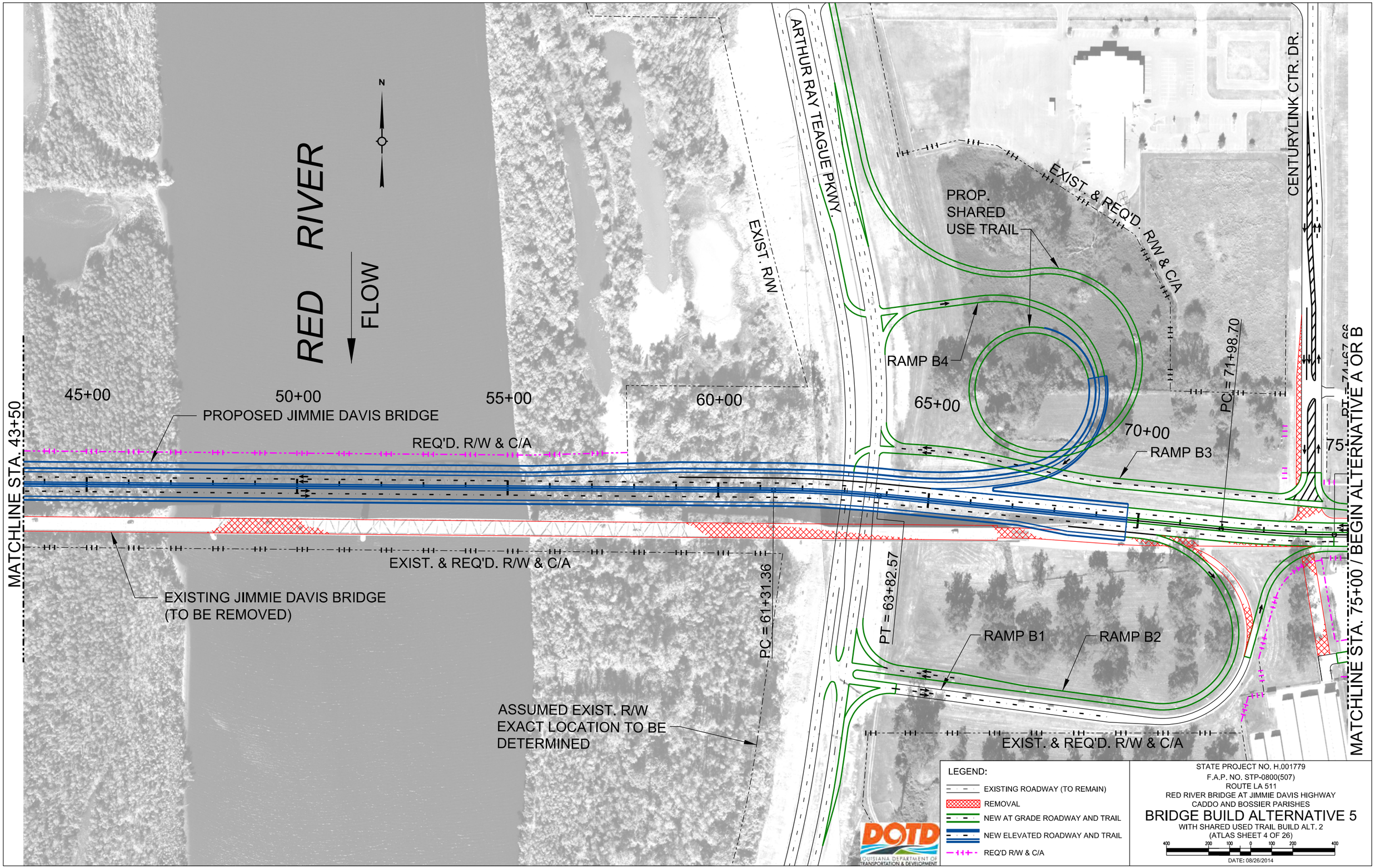
RED RIVER
FLOW
N
45+00
50+00
55+00
60+00
65+00
70+00
75+00
PROPOSED JIMMIE DAVIS BRIDGE
REQ'D. R/W & C/A
EXIST. & REQ'D. R/W & C/A
EXISTING JIMMIE DAVIS BRIDGE
(TO BE REMOVED)
MATCHLINE STA. 43+50
MATCHLINE STA. 75+00 / BEGIN ALTERNATIVE A OR B
ARTHUR RAY TEAGUE PKWY.
EXIST. R/W
CENTURYLINK CTR. DR.
PROP.
SHARED
USE TRAIL
RAMP B4
RAMP B3
RAMP B1
RAMP B2
PC = 71+98.70
PT = 63+82.57
PC = 61+31.36
ASSUMED EXIST. R/W
EXACT LOCATION TO BE
DETERMINED
LEGEND:
EXISTING ROADWAY (TO REMAIN)
REMOVAL
NEW AT GRADE ROADWAY AND TRAIL
NEW ELEVATED ROADWAY AND TRAIL
REQ'D R/W & C/A
DOTD
LOUISIANA DEPARTMENT OF TRANSPORTATION & DEVELOPMENT
STATE PROJECT NO. H.001779
F.A.P. NO. STP-0800(507)
ROUTE LA 511
RED RIVER BRIDGE AT JIMMIE DAVIS HIGHWAY
CADDO AND BOSSIER PARISHES
BRIDGE BUILD ALTERNATIVE 5
WITH SHARED USED TRAIL BUILD ALT. 2
(ATLAS SHEET 4 OF 26)
400 200 100 0 100 200 400
DATE: 08/26/2014

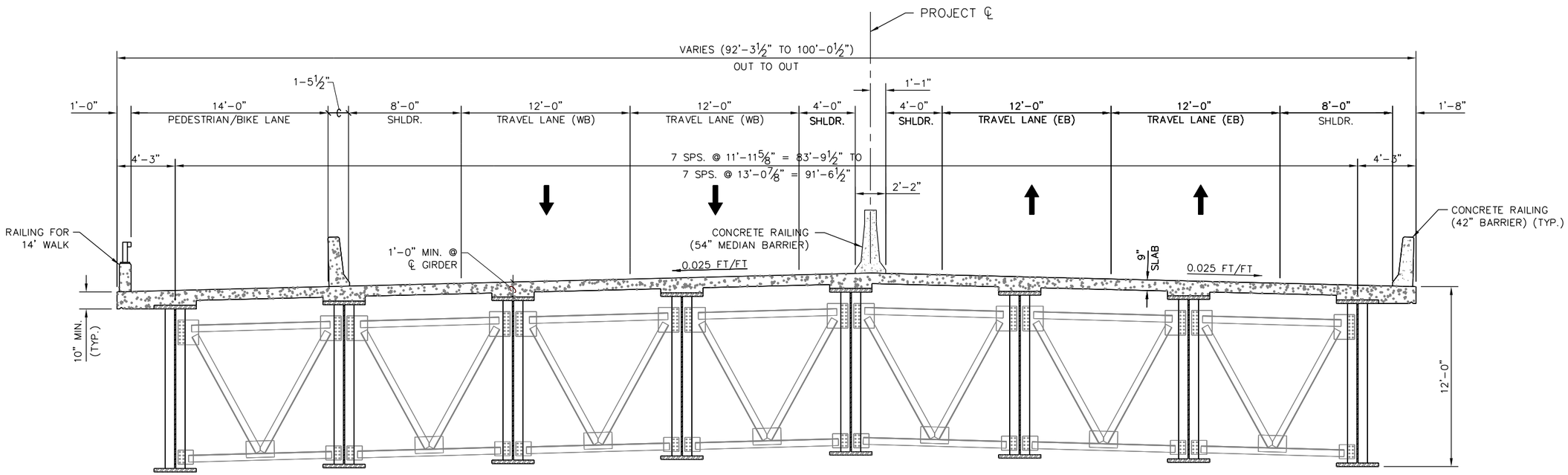

TYPICAL SECTION AT STA. 50+00

N.T.S

STATE PROJECT NO. H.001779
F.A.P. NO. STP-0800(507)
ROUTE LA 511
RED RIVER BRIDGE AT JIMMIE DAVIS HIGHWAY
CADDO AND BOSSIER PARISHES

BRIDGE BUILD ALTERNATIVE 5

SECTION OF STEEL OPTION

(ATLAS SHEET 5 OF 26)

DATE: 08/26/2014

LOUISIANA DEPARTMENT OF TRANSPORTATION & DEVELOPMENT

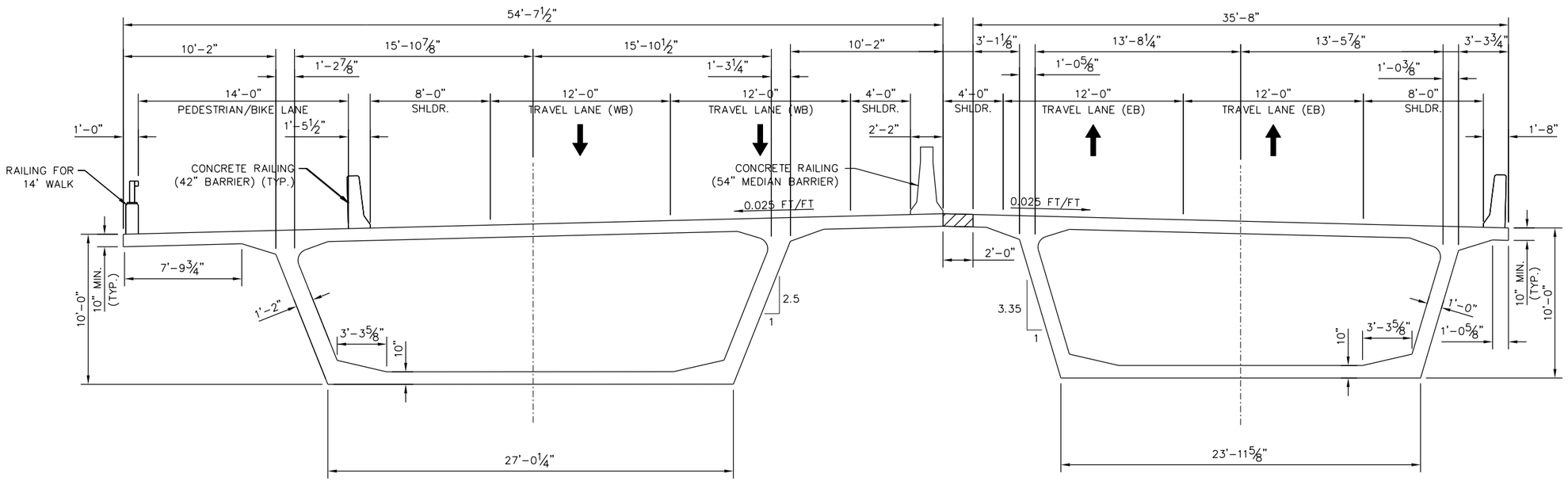

TYPICAL SECTION AT STA. 50+00

N.T.S

STATE PROJECT NO. H.001779
F.A.P. NO. STP-0800(507)
ROUTE LA 511
RED RIVER BRIDGE AT JIMMIE DAVIS HIGHWAY
CADDO AND BOSSIER PARISHES

BRIDGE BUILD ALTERNATIVE 5

SECTION OF CONCRETE OPTION

(ATLAS SHEET 6 OF 26)

DATE: 08/26/2014

LOUISIANA DEPARTMENT OF TRANSPORTATION & DEVELOPMENT

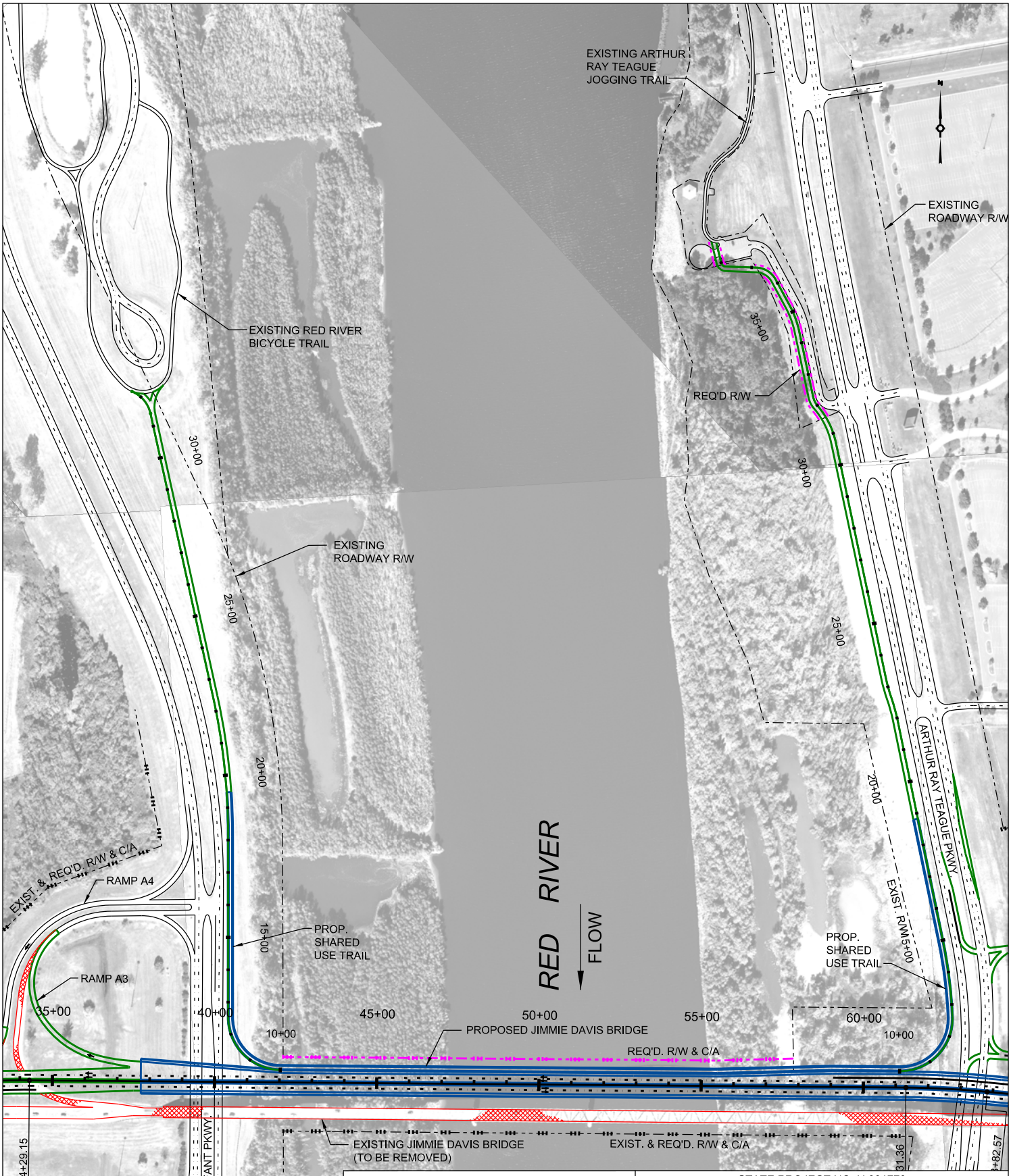

LEGEND:

- EXISTING ROADWAY (TO REMAIN)
- REMOVAL
- NEW AT GRADE ROADWAY AND TRAIL
- NEW ELEVATED ROADWAY AND TRAIL
- REQ'D R/W & C/A

DOTD
LOUISIANA DEPARTMENT OF TRANSPORTATION & DEVELOPMENT

STATE PROJECT NO. H.001779
F.A.P. NO. STP-0800(507)
ROUTE LA 511
RED RIVER BRIDGE AT JIMMIE DAVIS HIGHWAY
CADDO AND BOSSIER PARISHES

SHARED USE TRAIL BUILD ALT. 1

WITH BRIDGE BUILD ALTERNATIVE 5
(ATLAS SHEET 7 OF 26)

400 200 100 0 100 200 400

DATE: 08/26/2014

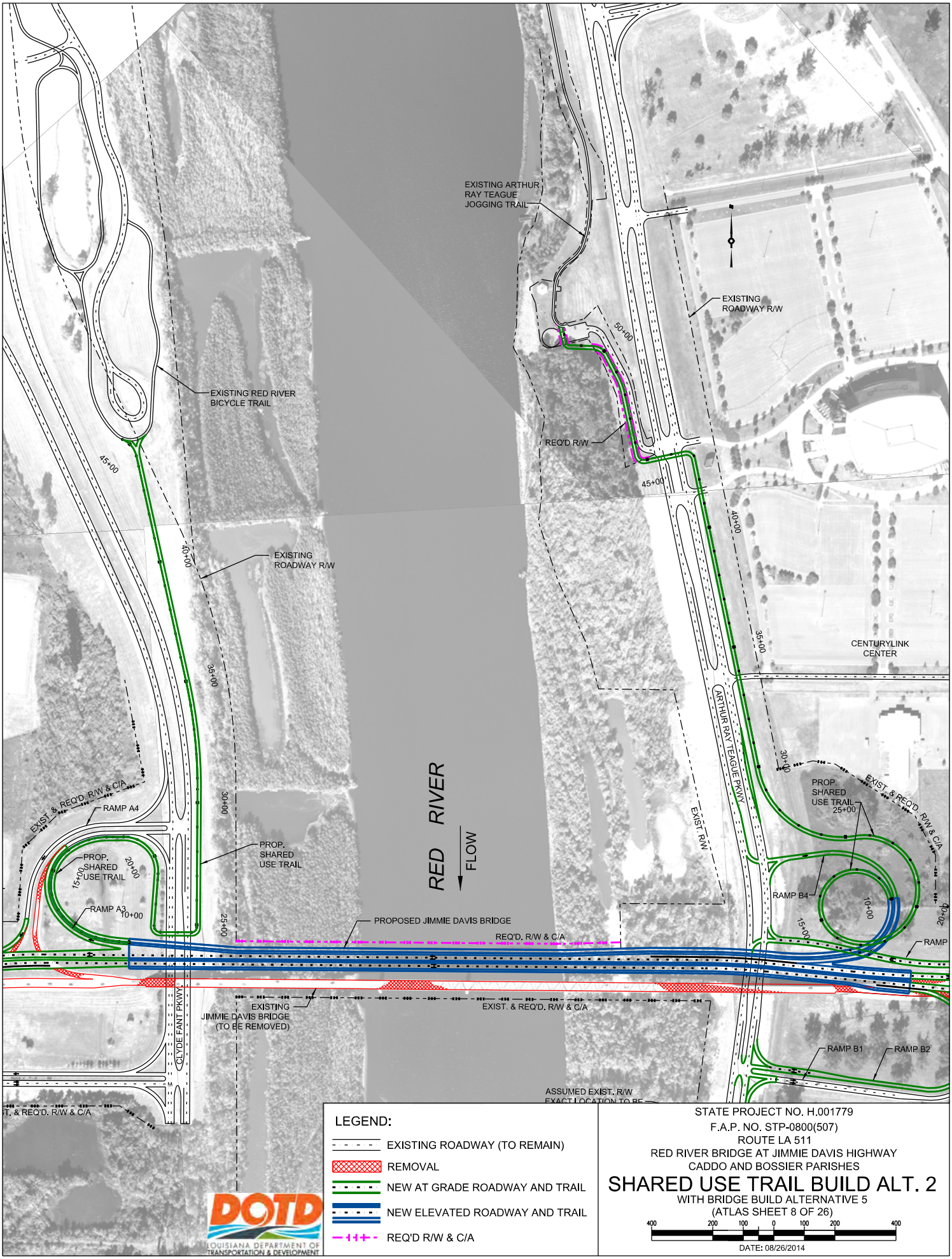
EXISTING ARTHUR RAY TEAGUE JOGGING TRAIL
EXISTING ROADWAY R/W
EXISTING RED RIVER BICYCLE TRAIL
REQ'D R/W
50+00
45+00
40+00
35+00
30+00
25+00
20+00
15+00
10+00
EXISTING ROADWAY R/W
CENTURYLINK CENTER
ARTHUR RAY TEAGUE PKWY.
EXIST. R/W
RED RIVER
FLOW
EXIST. & REQ'D. R/W & C/A
RAMP A4
PROP. SHARED USE TRAIL
RAMP A3
PROP. SHARED USE TRAIL
PROP. SHARED USE TRAIL
RAMP B4
RAMP
PROPOSED JIMMIE DAVIS BRIDGE
REQ'D. R/W & C/A
EXISTING JIMMIE DAVIS BRIDGE (TO BE REMOVED)
EXIST. & REQ'D. R/W & C/A
CLYDE FANT PKWY.
RAMP B1
RAMP B2
ASSUMED EXIST. R/W
LEGEND:
EXISTING ROADWAY (TO REMAIN)
REMOVAL
NEW AT GRADE ROADWAY AND TRAIL
NEW ELEVATED ROADWAY AND TRAIL
REQ'D R/W & C/A
DOTD
LOUISIANA DEPARTMENT OF TRANSPORTATION & DEVELOPMENT
STATE PROJECT NO. H.001779
F.A.P. NO. STP-0800(507)
ROUTE LA 511
RED RIVER BRIDGE AT JIMMIE DAVIS HIGHWAY
CADDO AND BOSSIER PARISHES
SHARED USE TRAIL BUILD ALT. 2
WITH BRIDGE BUILD ALTERNATIVE 5
(ATLAS SHEET 8 OF 26)
400 200 100 0 100 200 400
DATE: 08/26/2014

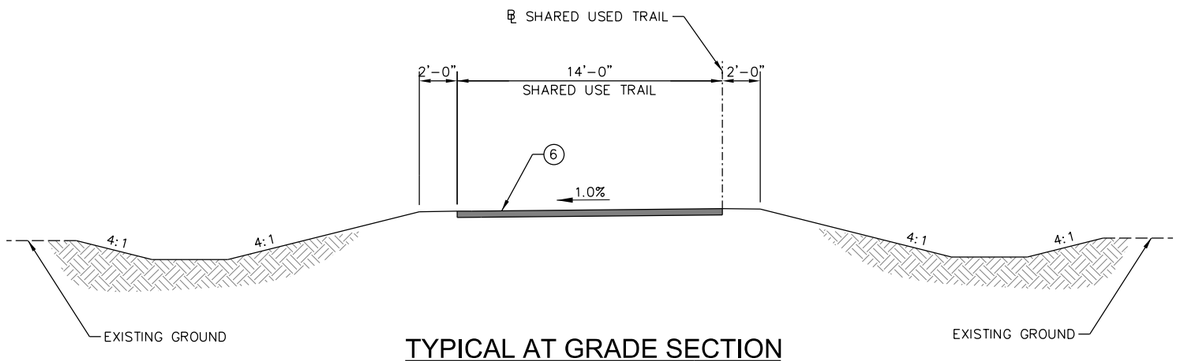

TYPICAL AT GRADE SECTION
SHARED USE TRAIL ALTS 1 & 2

N.T.S.

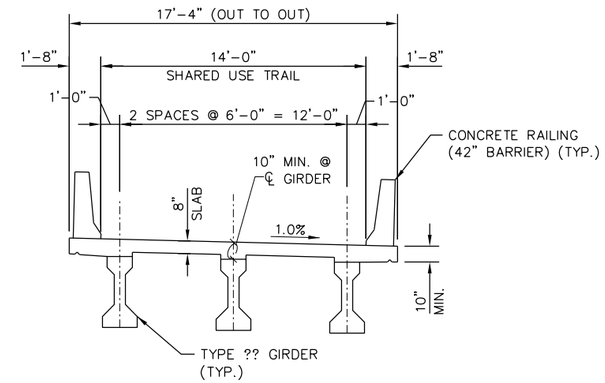

TYPICAL SECTION ON STRUCTURE
SHARED USE TRAIL ALT 1

N.T.S.

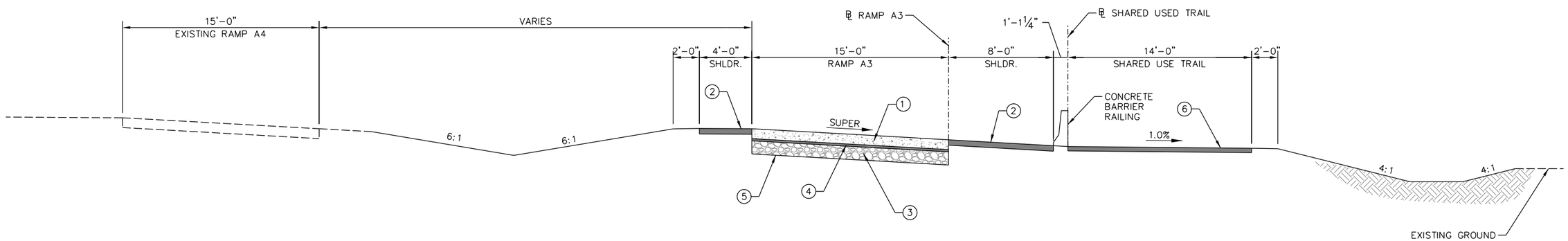

SHARED USE TRAIL ALT 2 SECTION AT NEW RAMP A3

(RED RIVER WEST BANK)
N.T.S.

LEGEND

1. 9" PORTLAND CEMENT CONCRETE PAVEMENT
2. XX" ASPHALTIC CONCRETE PAVED SHOULDER
3. 10" CLASS II BASE COURSE
4. SUPERPAVE ASPHALTIC CONCRETE BASE COURSE LEVEL 1 (2" THICK)
5. GEOTEXTILE FABRIC (CLASS D)
6. XX" ASPHALTIC CONCRETE PAVED SHARED USE TRAIL

STATE PROJECT NO. H.001779
F.A.P. NO. STP-0800(507)
ROUTE LA 511
RED RIVER BRIDGE AT JIMMIE DAVIS HIGHWAY
CADDO AND BOSSIER PARISHES

DOTD
LOUISIANA DEPARTMENT OF TRANSPORTATION & DEVELOPMENT

SHARED USE TRAIL BUILD ALTS.

TYPICAL SECTIONS (1 OF 2)

(ATLAS SHEET 9 OF 26)

DATE: 08/26/2014

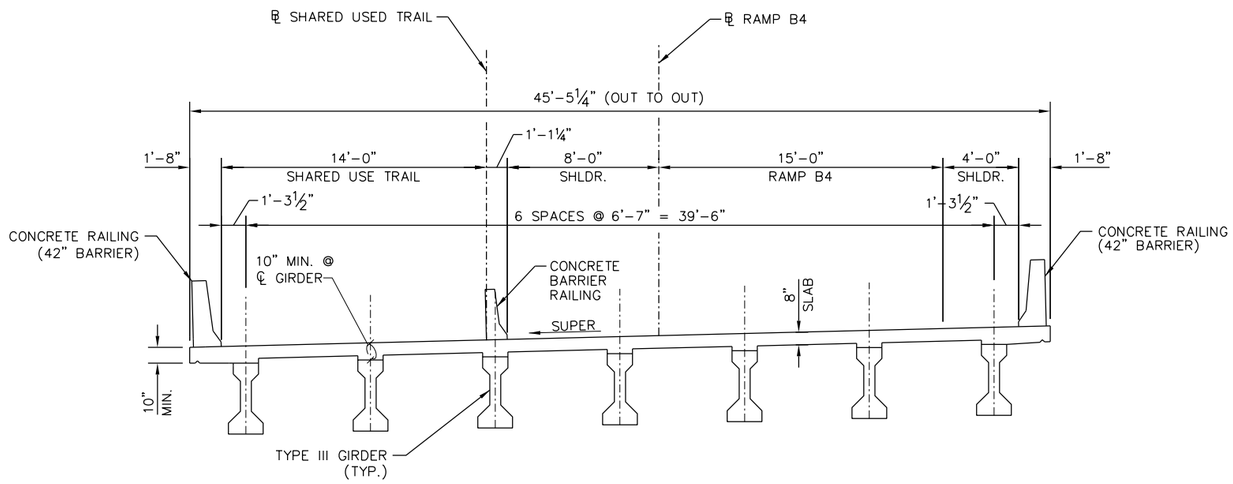

TYPICAL SECTION ON STRUCTURE
SHARED USE TRAIL ALT 2 AT RAMP B4

(RED RIVER EAST BANK)
N.T.S.

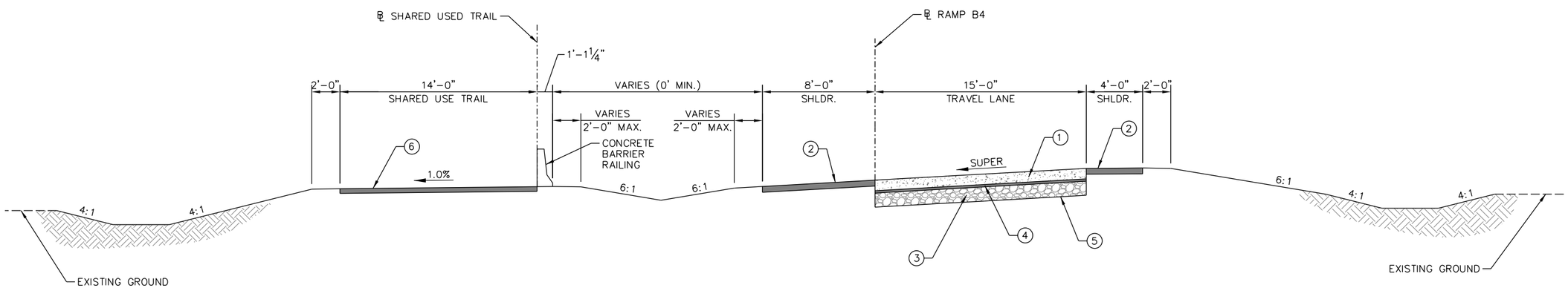

SHARED USE TRAIL ALT 2 SECTION AT RAMP B4

(RED RIVER EAST BANK)
N.T.S.

LEGEND

1. 9" PORTLAND CEMENT CONCRETE PAVEMENT
2. XX" ASPHALTIC CONCRETE PAVED SHOULDER
3. 10" CLASS II BASE COURSE
4. SUPERPAVE ASPHALTIC CONCRETE BASE COURSE LEVEL 1 (2" THICK)
5. GEOTEXTILE FABRIC (CLASS D)
6. XX" ASPHALTIC CONCRETE PAVED SHARED USE TRAIL

STATE PROJECT NO. H.001779
F.A.P. NO. STP-0800(507)
ROUTE LA 511
RED RIVER BRIDGE AT JIMMIE DAVIS HIGHWAY
CADDO AND BOSSIER PARISHES

SHARED USE TRAIL BUILD ALTS.

TYPICAL SECTIONS (2 OF 2)

(ATLAS SHEET 10 OF 26)

DATE: 08/26/2014

LOUISIANA DEPARTMENT OF TRANSPORTATION & DEVELOPMENT

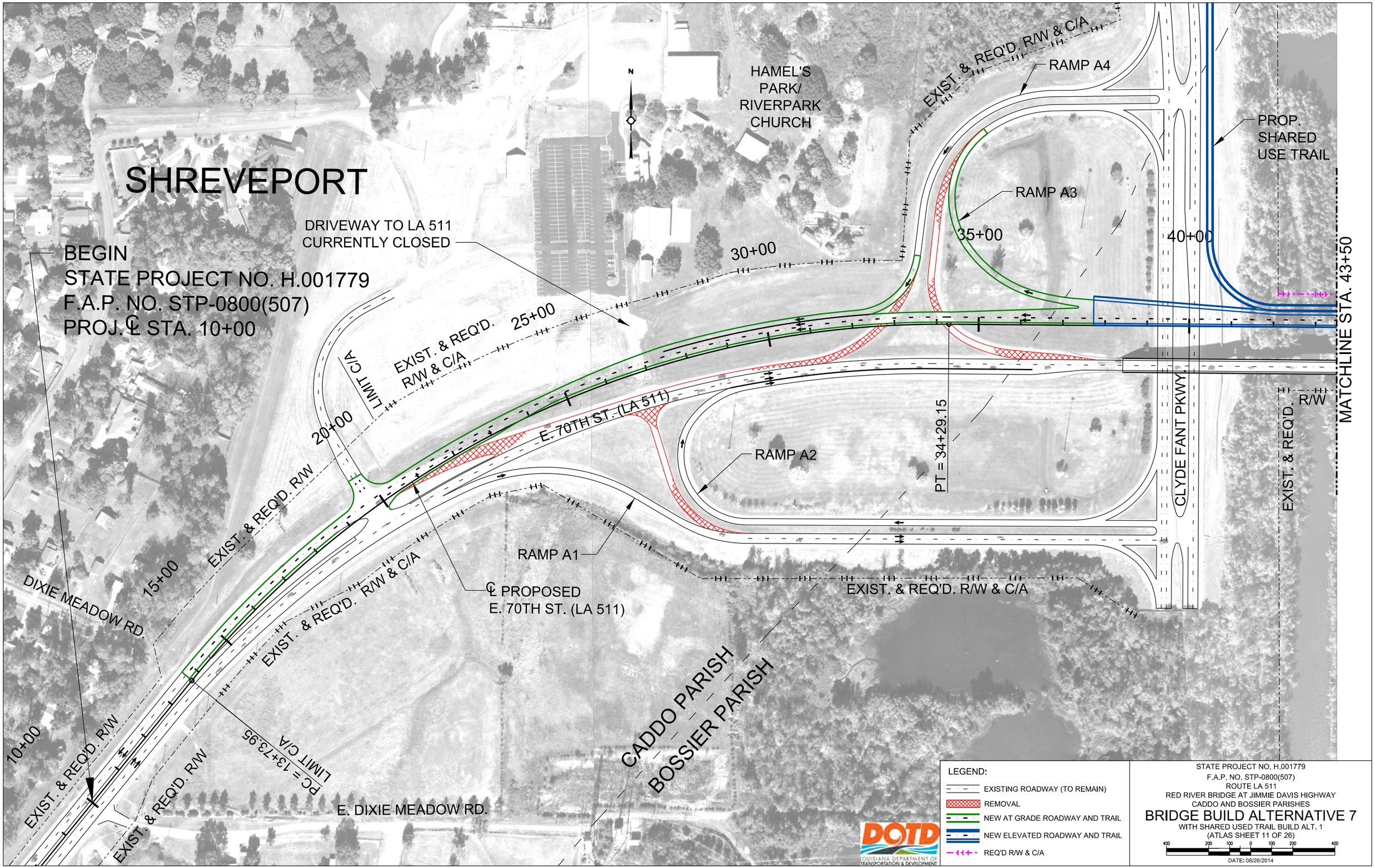
SHREVEPORT
BEGIN
STATE PROJECT NO. H.001779
F.A.P. NO. STP-0800(507)
PROJ. ℄ STA. 10+00
DRIVEWAY TO LA 511
CURRENTLY CLOSED
HAMEL'S
PARK/
RIVERPARK
CHURCH
EXIST. & REQ'D. R/W & C/A
RAMP A4
PROP.
SHARED
USE TRAIL
RAMP A3
35+00
40+00
30+00
25+00
20+00
15+00
10+00
EXIST. & REQ'D.
R/W & C/A
LIMIT C/A
E. 70TH ST. (LA 511)
RAMP A2
PT = 34+29.15
CLYDE FANT PKWY.
EXIST. & REQ'D. R/W
MATCHLINE STA. 43+50
EXIST. & REQ'D. R/W
RAMP A1
℄ PROPOSED
E. 70TH ST. (LA 511)
EXIST. & REQ'D. R/W & C/A
DIXIE MEADOW RD.
CADDO PARISH
BOSSIER PARISH
PC = 13+73.95
E. DIXIE MEADOW RD.
DOTD
LOUISIANA DEPARTMENT OF
TRANSPORTATION & DEVELOPMENT
LEGEND:
EXISTING ROADWAY (TO REMAIN)
REMOVAL
NEW AT GRADE ROADWAY AND TRAIL
NEW ELEVATED ROADWAY AND TRAIL
REQ'D R/W & C/A
STATE PROJECT NO. H.001779
F.A.P. NO. STP-0800(507)
ROUTE LA 511
RED RIVER BRIDGE AT JIMMIE DAVIS HIGHWAY
CADDO AND BOSSIER PARISHES
BRIDGE BUILD ALTERNATIVE 7
WITH SHARED USED TRAIL BUILD ALT. 1
(ATLAS SHEET 11 OF 26)
400 200 100 0 100 200 400
DATE: 08/26/2014

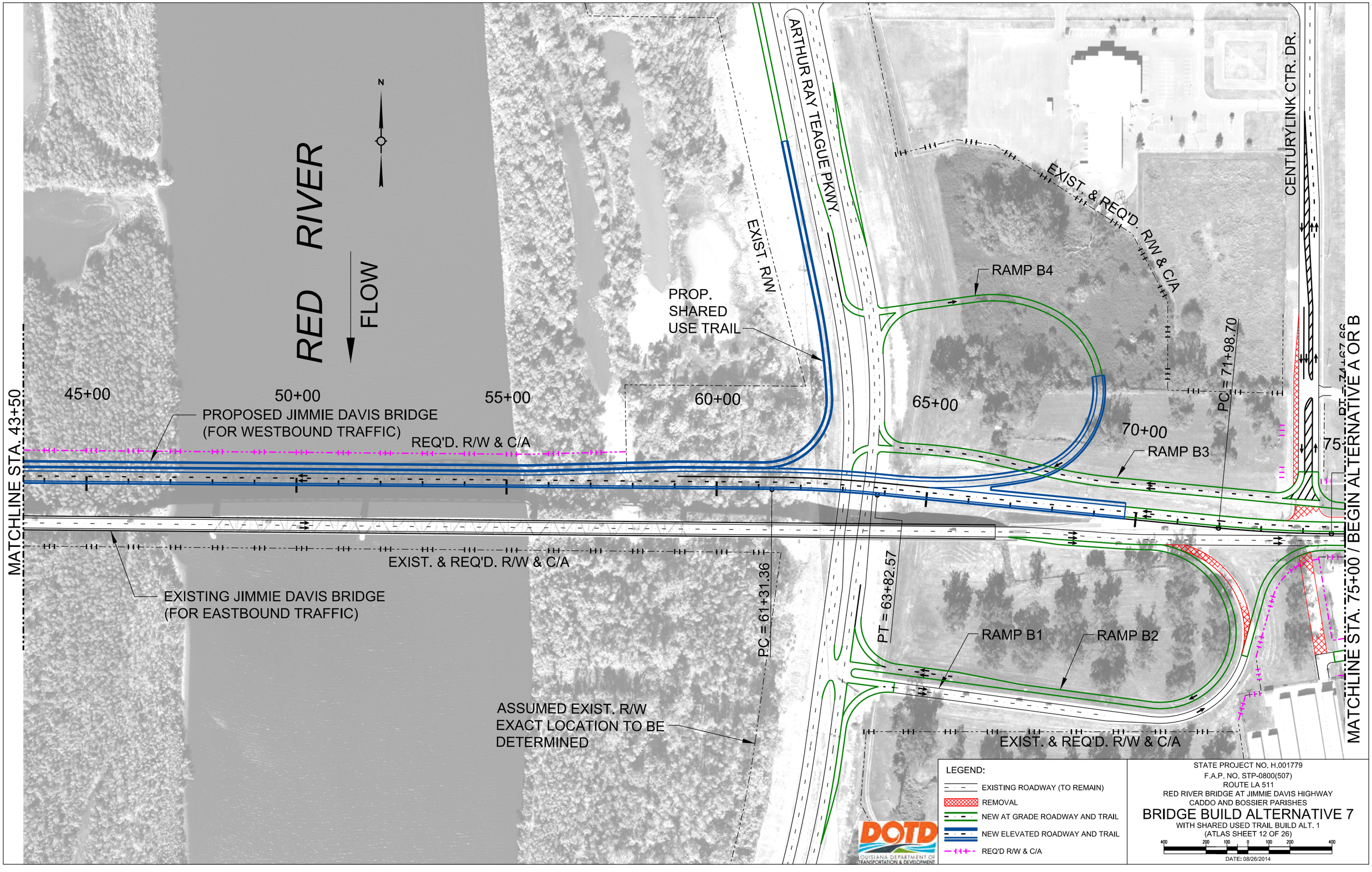
RED RIVER
FLOW
N
MATCHLINE STA. 43+50
45+00
50+00
55+00
60+00
65+00
70+00
75+00
PROPOSED JIMMIE DAVIS BRIDGE
(FOR WESTBOUND TRAFFIC)
REQ'D. R/W & C/A
EXIST. & REQ'D. R/W & C/A
EXISTING JIMMIE DAVIS BRIDGE
(FOR EASTBOUND TRAFFIC)
ASSUMED EXIST. R/W
EXACT LOCATION TO BE
DETERMINED
PC = 61+31.36
PT = 63+82.57
PC = 71+98.70
PT = 74+67.66
RAMP B1
RAMP B2
RAMP B3
RAMP B4
PROP.
SHARED
USE TRAIL
EXIST. R/W
ARTHUR RAY TEAGUE PKWY.
EXIST. & REQ'D. R/W & C/A
CENTURYLINK CTR. DR.
MATCHLINE STA. 75+00 / BEGIN ALTERNATIVE A OR B
LEGEND:
EXISTING ROADWAY (TO REMAIN)
REMOVAL
NEW AT GRADE ROADWAY AND TRAIL
NEW ELEVATED ROADWAY AND TRAIL
REQ'D R/W & C/A
DOTD
LOUISIANA DEPARTMENT OF TRANSPORTATION & DEVELOPMENT
STATE PROJECT NO. H.001779
F.A.P. NO. STP-0800(507)
ROUTE LA 511
RED RIVER BRIDGE AT JIMMIE DAVIS HIGHWAY
CADDO AND BOSSIER PARISHES
BRIDGE BUILD ALTERNATIVE 7
WITH SHARED USED TRAIL BUILD ALT. 1
(ATLAS SHEET 12 OF 26)
400 200 100 0 100 200 400
DATE: 08/26/2014

SHREVEPORT

BEGIN
STATE PROJECT NO. H.001779
F.A.P. NO. STP-0800(507)
PROJ. ℄ STA. 10+00

DRIVEWAY TO LA 511
CURRENTLY CLOSED

HAMEL'S
PARK/
RIVERPARK
CHURCH

EXIST. & REQ'D. R/W & C/A

RAMP A4

PROP.
SHARED
USE TRAIL

PROP.
SHARED
USE TRAIL

RAMP A3

35+00

40+00

30+00

25+00

EXIST. & REQ'D.
R/W & C/A

LIMIT C/A

20+00

E. 70TH ST. (LA 511)

PT = 34+29.15

RAMP A2

CLYDE FANT PKWY.

EXIST. & REQ'D. R/W

MATCHLINE STA. 43+50

EXIST. & REQ'D. R/W

RAMP A1

15+00

EXIST. & REQ'D. R/W

℄ PROPOSED
E. 70TH ST. (LA 511)

EXIST. & REQ'D. R/W & C/A

EXIST. & REQ'D. R/W & C/A

DIXIE MEADOW RD.

CADDO PARISH

BOSSIER PARISH

10+00

EXIST. & REQ'D. R/W

PC = 13+73.95

LIMIT C/A

EXIST. & REQ'D. R/W

E. DIXIE MEADOW RD.

LEGEND:

- EXISTING ROADWAY (TO REMAIN)
- REMOVAL
- NEW AT GRADE ROADWAY AND TRAIL
- NEW ELEVATED ROADWAY AND TRAIL
- REQ'D R/W & C/A

DOTD
LOUISIANA DEPARTMENT OF TRANSPORTATION & DEVELOPMENT

STATE PROJECT NO. H.001779
F.A.P. NO. STP-0800(507)
ROUTE LA 511
RED RIVER BRIDGE AT JIMMIE DAVIS HIGHWAY
CADDO AND BOSSIER PARISHES

BRIDGE BUILD ALTERNATIVE 7

WITH SHARED USED TRAIL BUILD ALT. 2
(ATLAS SHEET 13 OF 26)

400 200 100 0 100 200 400

DATE: 08/26/2014

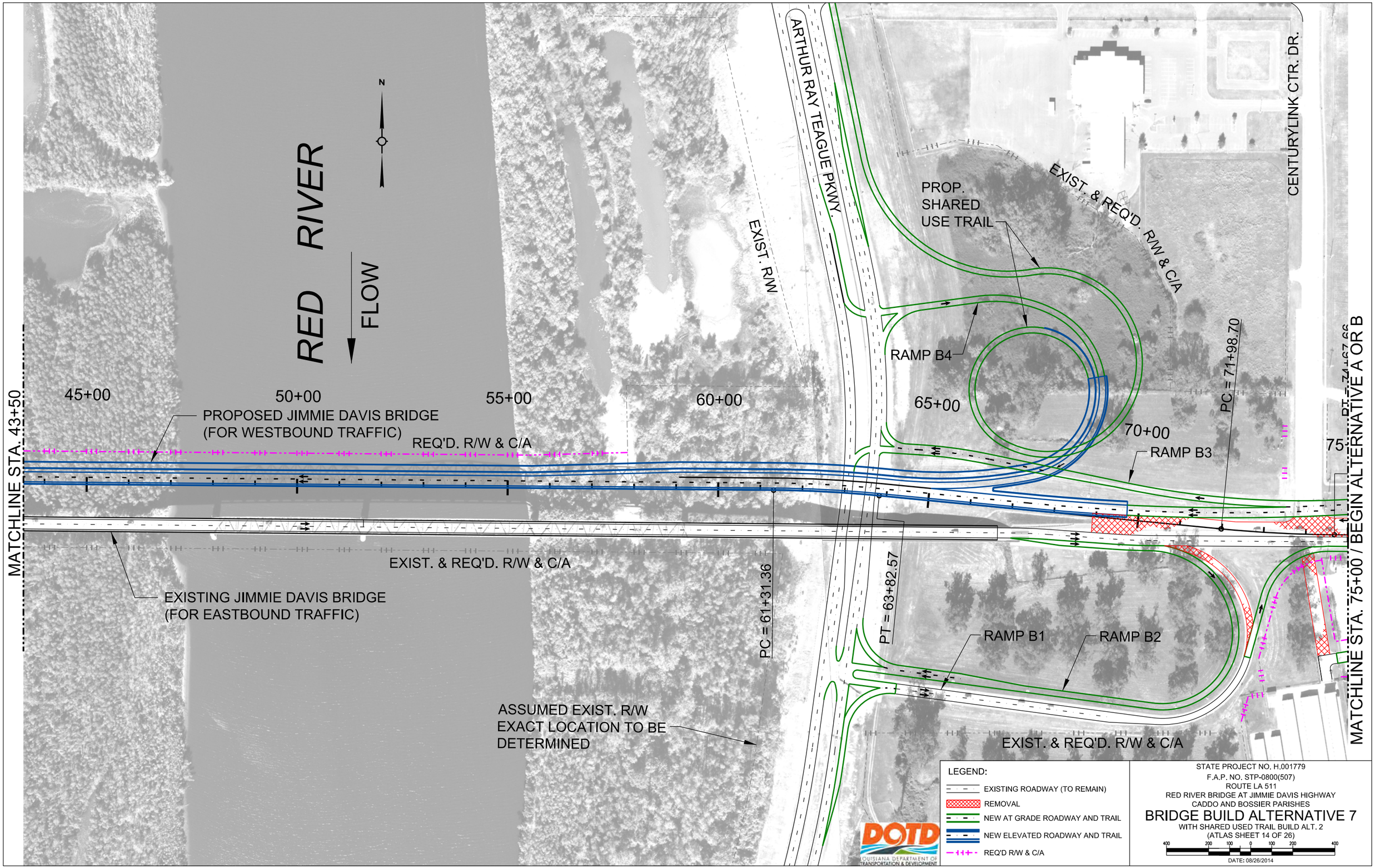
RED RIVER
FLOW
N
ARTHUR RAY TEAGUE PKWY.
EXIST. R/W
CENTURYLINK CTR. DR.
PROP. SHARED USE TRAIL
EXIST. & REQ'D. R/W & C/A
RAMP B4
RAMP B3
RAMP B1
RAMP B2
PC = 71+98.70
PT = 74+67.66
PT = 63+82.57
PC = 61+31.36
45+00
50+00
55+00
60+00
65+00
70+00
75+00
MATCHLINE STA. 43+50
MATCHLINE STA. 75+00 / BEGIN ALTERNATIVE A OR B
PROPOSED JIMMIE DAVIS BRIDGE (FOR WESTBOUND TRAFFIC)
REQ'D. R/W & C/A
EXIST. & REQ'D. R/W & C/A
EXISTING JIMMIE DAVIS BRIDGE (FOR EASTBOUND TRAFFIC)
ASSUMED EXIST. R/W EXACT LOCATION TO BE DETERMINED
EXIST. & REQ'D. R/W & C/A
LEGEND:
EXISTING ROADWAY (TO REMAIN)
REMOVAL
NEW AT GRADE ROADWAY AND TRAIL
NEW ELEVATED ROADWAY AND TRAIL
REQ'D R/W & C/A
DOTD
LOUISIANA DEPARTMENT OF TRANSPORTATION & DEVELOPMENT
STATE PROJECT NO. H.001779
F.A.P. NO. STP-0800(507)
ROUTE LA 511
RED RIVER BRIDGE AT JIMMIE DAVIS HIGHWAY
CADDO AND BOSSIER PARISHES
BRIDGE BUILD ALTERNATIVE 7
WITH SHARED USED TRAIL BUILD ALT. 2
(ATLAS SHEET 14 OF 26)
400 200 100 0 100 200 400
DATE: 08/26/2014

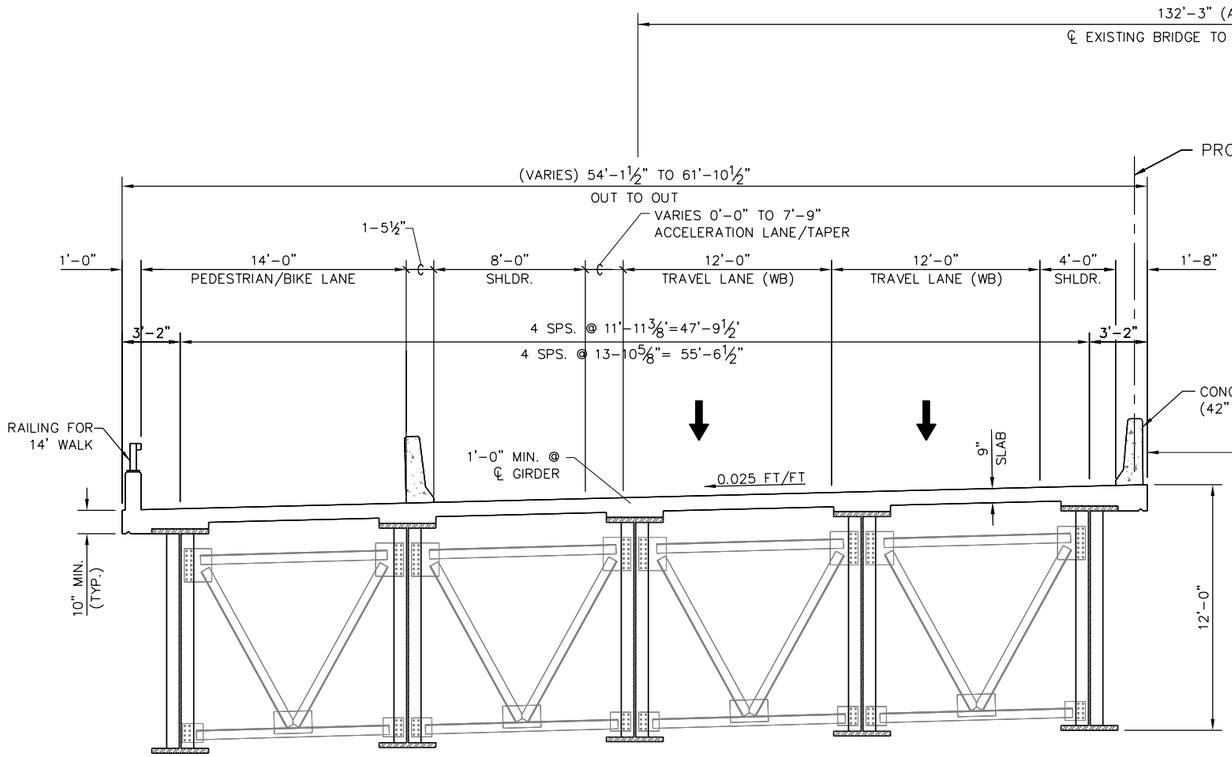

TYPICAL SECTION AT STA. 50+00

N.T.S.

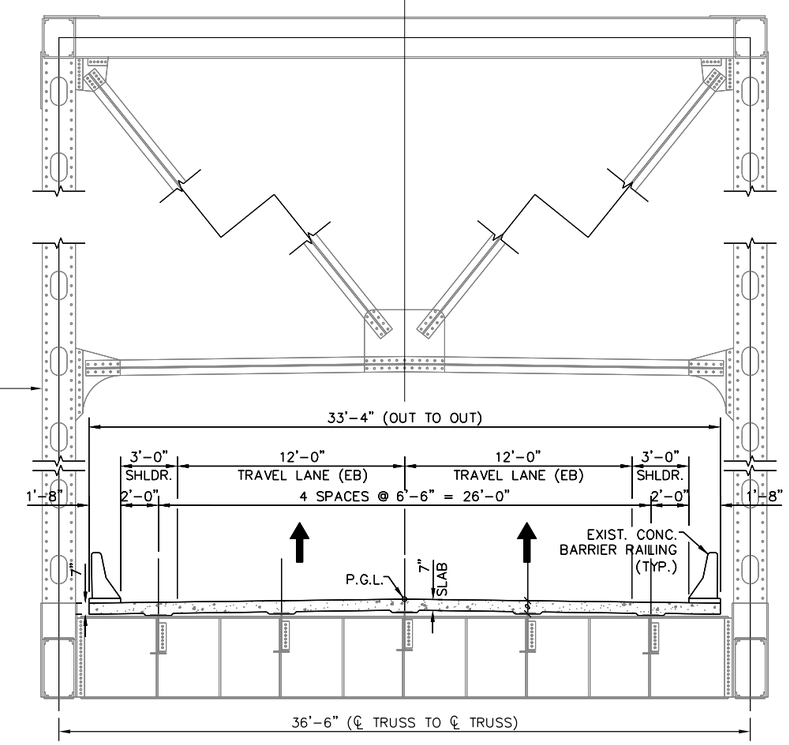

EXISTING BRIDGE (VEHICULAR TRAFFIC)
LOOKING EASTBOUND

STATE PROJECT NO. H.001779
F.A.P. NO. STP-0800(507)
ROUTE LA 511
RED RIVER BRIDGE AT JIMMIE DAVIS HIGHWAY
CADDO AND BOSSIER PARISHES

BRIDGE BUILD ALTERNATIVE 7

SECTION OF STEEL OPTION

(ATLAS SHEET 15 OF 26)

DATE: 08/26/2014

LOUISIANA DEPARTMENT OF TRANSPORTATION & DEVELOPMENT

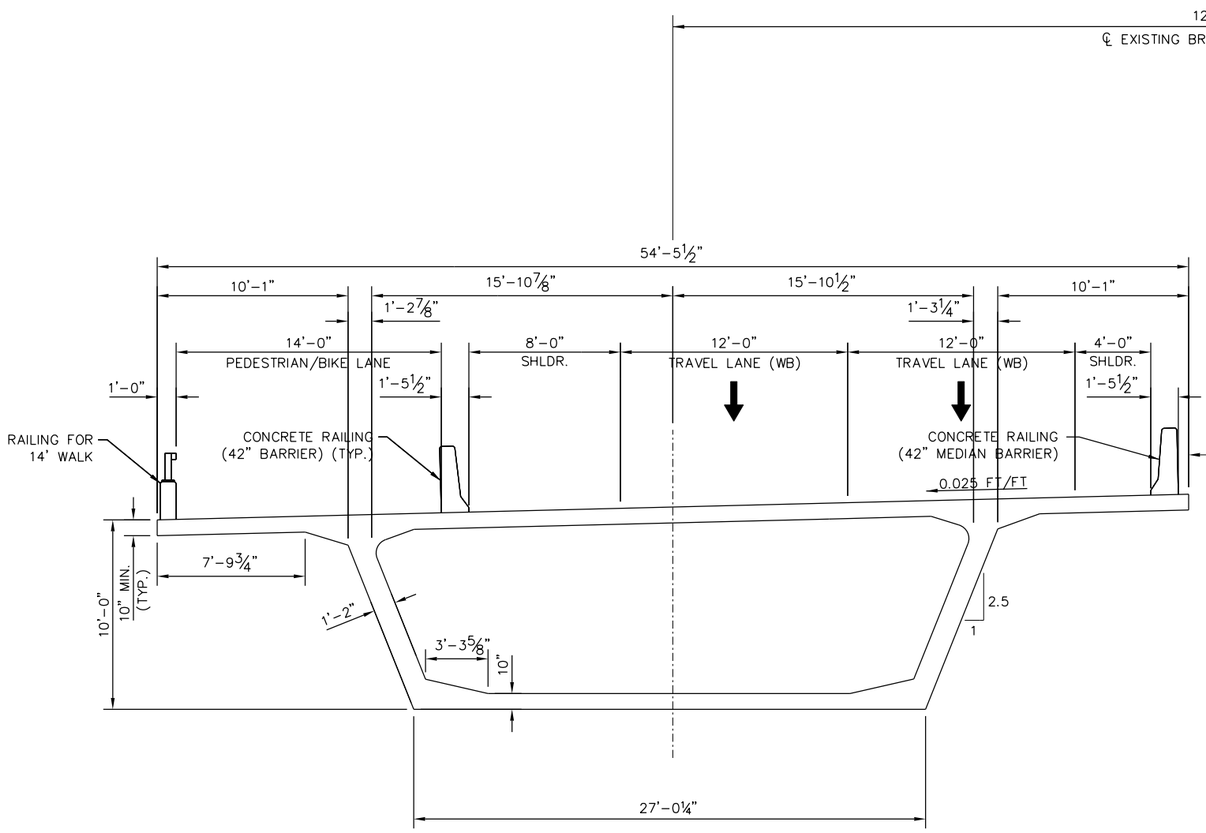

TYPICAL SECTION AT STA. 50+00

N.T.S.

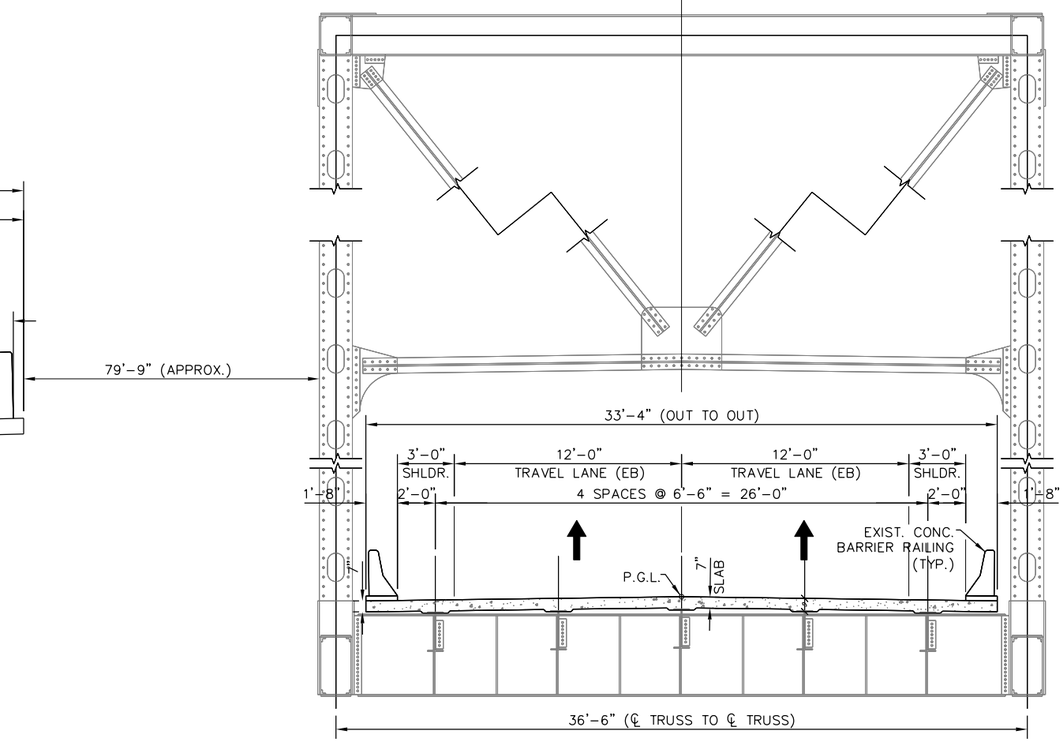

EXISTING BRIDGE (VEHICULAR TRAFFIC)
LOOKING EASTBOUND

STATE PROJECT NO. H.001779
F.A.P. NO. STP-0800(507)
ROUTE LA 511
RED RIVER BRIDGE AT JIMMIE DAVIS HIGHWAY
CADDO AND BOSSIER PARISHES

BRIDGE BUILD ALTERNATIVE 7

SECTION OF CONCRETE OPTION

(ATLAS SHEET 16 OF 26)

DATE: 08/26/2014

LOUISIANA DEPARTMENT OF TRANSPORTATION & DEVELOPMENT

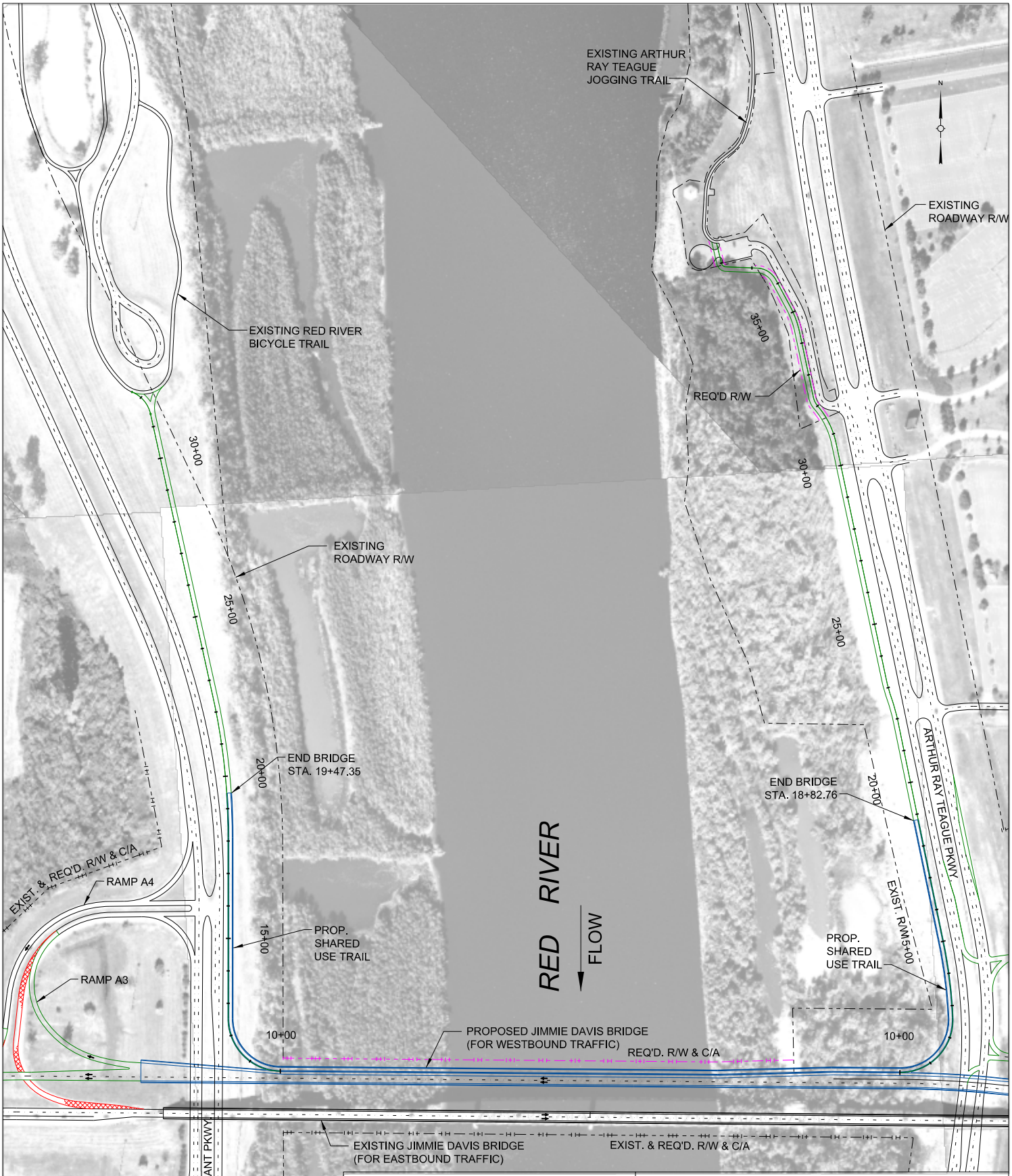

LEGEND:

- EXISTING ROADWAY (TO REMAIN)
- REMOVAL
- NEW AT GRADE ROADWAY AND TRAIL
- NEW ELEVATED ROADWAY AND TRAIL
- REQ'D R/W & C/A

STATE PROJECT NO. H.001779
F.A.P. NO. STP-0800(507)
ROUTE LA 511
RED RIVER BRIDGE AT JIMMIE DAVIS HIGHWAY
CADDO AND BOSSIER PARISHES

SHARED USE TRAIL BUILD ALT. 1

WITH BRIDGE BUILD ALTERNATIVE 7
(ATLAS SHEET 17 OF 26)

400 200 100 0 100 200 400

DATE: 05/15/2014

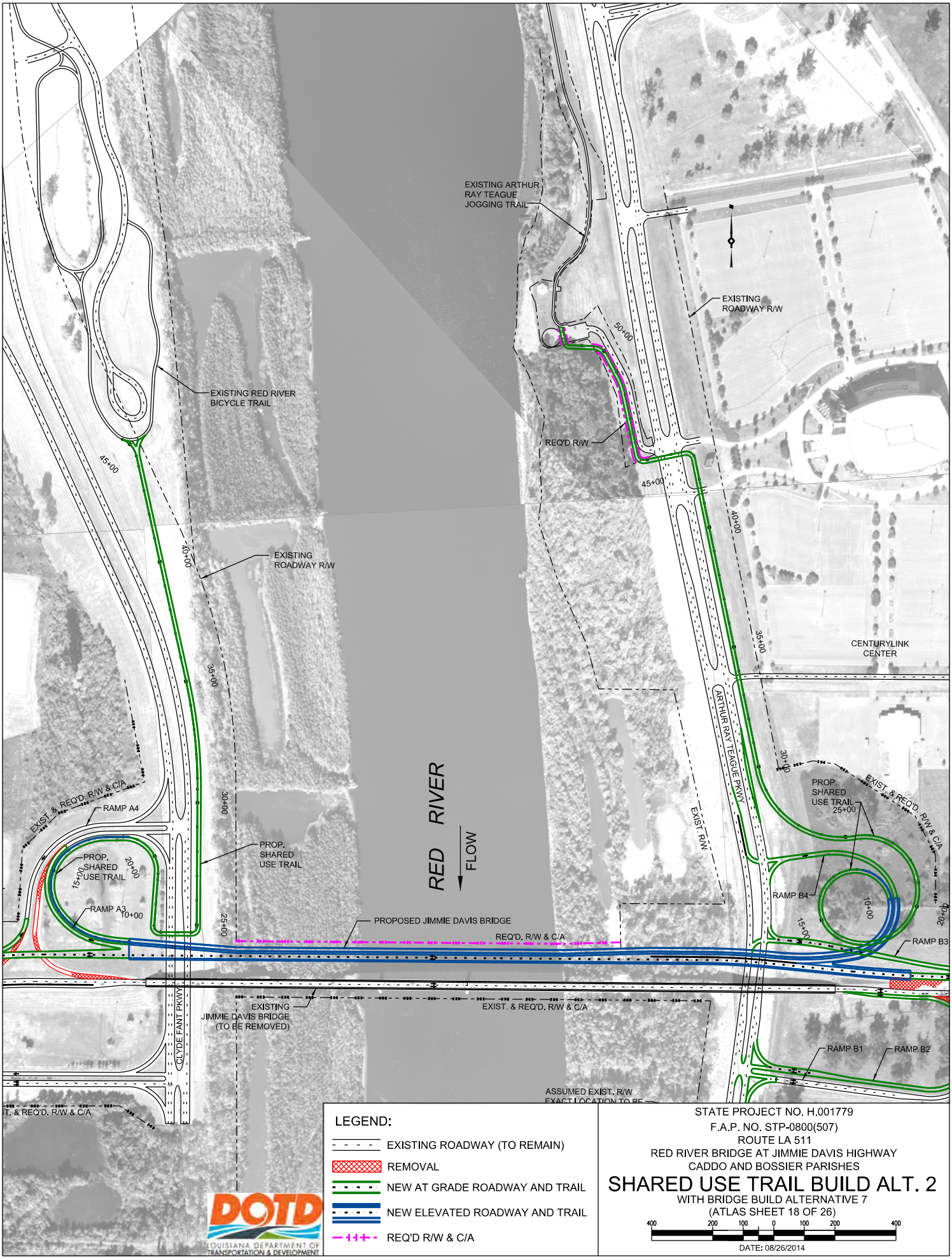
EXISTING ARTHUR RAY TEAGUE JOGGING TRAIL
EXISTING ROADWAY R/W
EXISTING RED RIVER BICYCLE TRAIL
REQ'D R/W
50+00
45+00
40+00
35+00
30+00
25+00
20+00
15+00
10+00
EXISTING ROADWAY R/W
CENTURYLINK CENTER
ARTHUR RAY TEAGUE PKWY
EXIST. R/W
RED RIVER
FLOW
EXIST. & REQ'D. R/W & C/A
RAMP A4
PROP. SHARED USE TRAIL
RAMP A3
PROP. SHARED USE TRAIL
PROP. SHARED USE TRAIL
RAMP B4
RAMP B3
RAMP B1
RAMP B2
PROPOSED JIMMIE DAVIS BRIDGE
REQ'D. R/W & C/A
EXISTING JIMMIE DAVIS BRIDGE (TO BE REMOVED)
EXIST. & REQ'D. R/W & C/A
CLYDE FANT PKWY
ASSUMED EXIST. R/W
LEGEND:
EXISTING ROADWAY (TO REMAIN)
REMOVAL
NEW AT GRADE ROADWAY AND TRAIL
NEW ELEVATED ROADWAY AND TRAIL
REQ'D R/W & C/A
DOTD
LOUISIANA DEPARTMENT OF TRANSPORTATION & DEVELOPMENT
STATE PROJECT NO. H.001779
F.A.P. NO. STP-0800(507)
ROUTE LA 511
RED RIVER BRIDGE AT JIMMIE DAVIS HIGHWAY
CADDO AND BOSSIER PARISHES
SHARED USE TRAIL BUILD ALT. 2
WITH BRIDGE BUILD ALTERNATIVE 7
(ATLAS SHEET 18 OF 26)
400 200 100 0 100 200 400
DATE: 08/26/2014

BOSSIER CITY
MATCHLINE STA. 75+00 / END ALTERNATIVE 5 OR 7
℄ PROP. JIMMIE DAVIS HWY (LA 511)
EXIST. & REQ'D. R/W & C/A
80+00
LIMIT C/A
85+00
EXIST. & REQ'D. R/W
MEDICAL DR.
PC = 89+53.41
90+00
95+00
EXIST. R/W
PT = 99+11.89
100+00
105+00
BARKSDALE BLVD / US 71
KANSAS CITY SOUTHERN R.R.
N
EXIST. & REQ'D. R/W
REQ'D R/W
LIMIT C/A
SUNFLOWER BLVD.
EXIST. R/W
END
STATE PROJECT NO. H.001779
F.A.P. NO. STP-0800(507)
PROJ. ℄ STA. 105+50
DOTD
LOUISIANA DEPARTMENT OF TRANSPORTATION & DEVELOPMENT
LEGEND:
EXISTING ROADWAY (TO REMAIN)
REMOVAL
NEW AT GRADE ROADWAY AND TRAIL
NEW ELEVATED ROADWAY AND TRAIL
REQ'D R/W & C/A
STATE PROJECT NO. H.001779
F.A.P. NO. STP-0800(507)
ROUTE LA 511
RED RIVER BRIDGE AT JIMMIE DAVIS HIGHWAY
CADDO AND BOSSIER PARISHES
ACCESS BUILD ALTERNATIVE A
(ATLAS SHEET 19 OF 26)
400 200 100 0 100 200 400
DATE: 08/26/2014

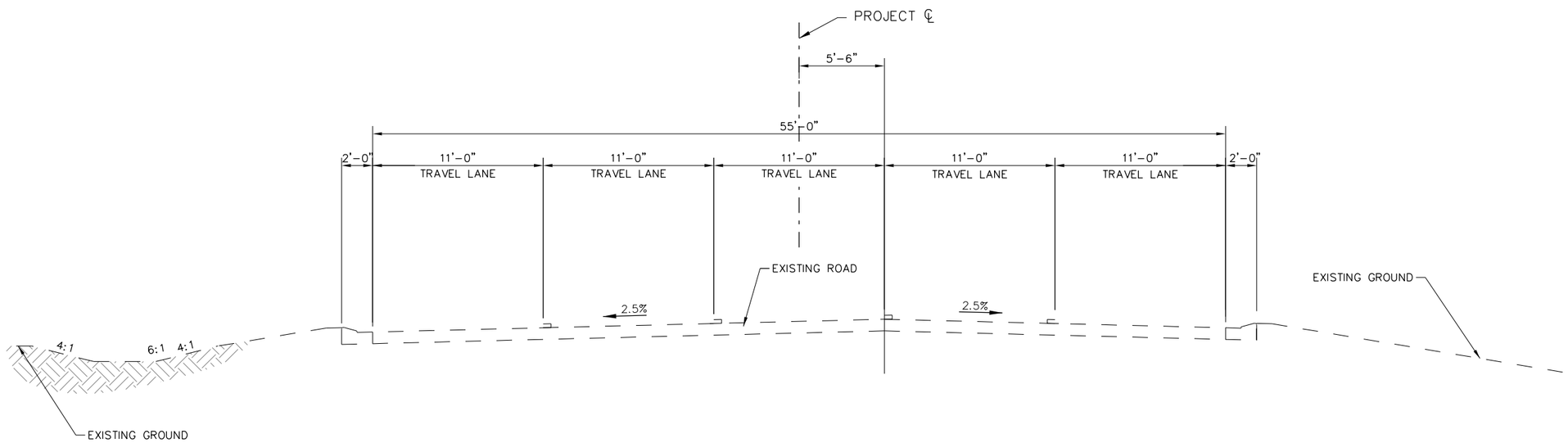

TYPICAL SECTION LA 511
5 LANE EXISTING ROADWAY
(CENTURYLINK CENTER DR. TO US 71)
N.T.S.

STATE PROJECT NO. H.001779
F.A.P. NO. STP-0800(507)
ROUTE LA 511
RED RIVER BRIDGE AT JIMMIE DAVIS HIGHWAY
CADDO AND BOSSIER PARISHES

ACCESS BUILD ALTERNATIVE A
TYPICAL SECTION

(ATLAS SHEET 20 OF 26)
DATE: 08/26/2014

LOUISIANA DEPARTMENT OF TRANSPORTATION & DEVELOPMENT

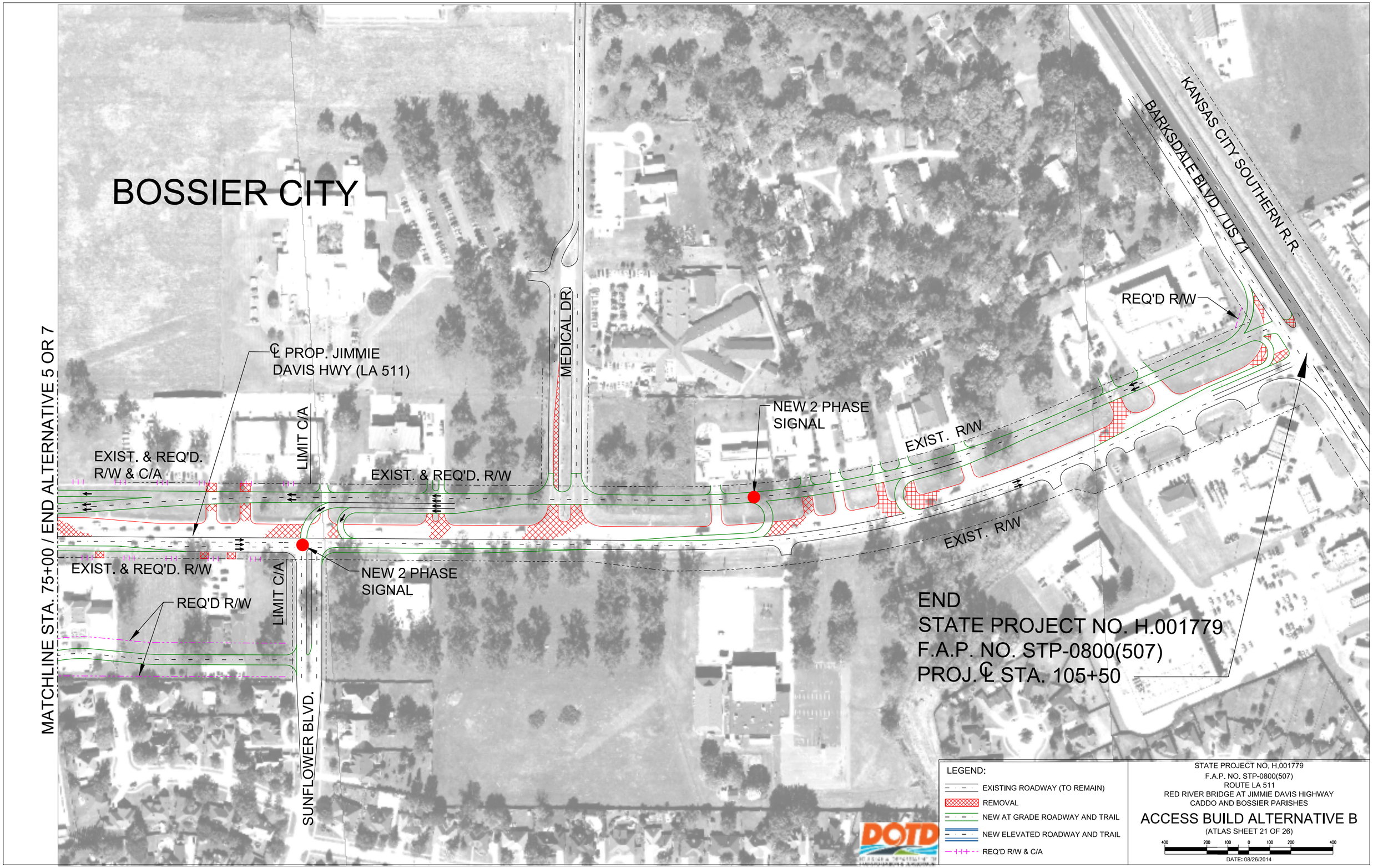
BOSSIER CITY
MATCHLINE STA. 75+00 / END ALTERNATIVE 5 OR 7
℄ PROP. JIMMIE DAVIS HWY (LA 511)
LIMIT C/A
EXIST. & REQ'D. R/W & C/A
EXIST. & REQ'D. R/W
MEDICAL DR.
NEW 2 PHASE SIGNAL
EXIST. R/W
EXIST. & REQ'D. R/W
NEW 2 PHASE SIGNAL
REQ'D R/W
LIMIT C/A
SUNFLOWER BLVD.
REQ'D R/W
BARKSDALE BLVD / US 71
KANSAS CITY SOUTHERN R.R.
EXIST. R/W
END
STATE PROJECT NO. H.001779
F.A.P. NO. STP-0800(507)
PROJ. ℄ STA. 105+50
LEGEND:
EXISTING ROADWAY (TO REMAIN)
REMOVAL
NEW AT GRADE ROADWAY AND TRAIL
NEW ELEVATED ROADWAY AND TRAIL
REQ'D R/W & C/A
DOTD
STATE PROJECT NO. H.001779
F.A.P. NO. STP-0800(507)
ROUTE LA 511
RED RIVER BRIDGE AT JIMMIE DAVIS HIGHWAY
CADDO AND BOSSIER PARISHES
ACCESS BUILD ALTERNATIVE B
(ATLAS SHEET 21 OF 26)
400 200 100 0 100 200 400
DATE: 08/26/2014

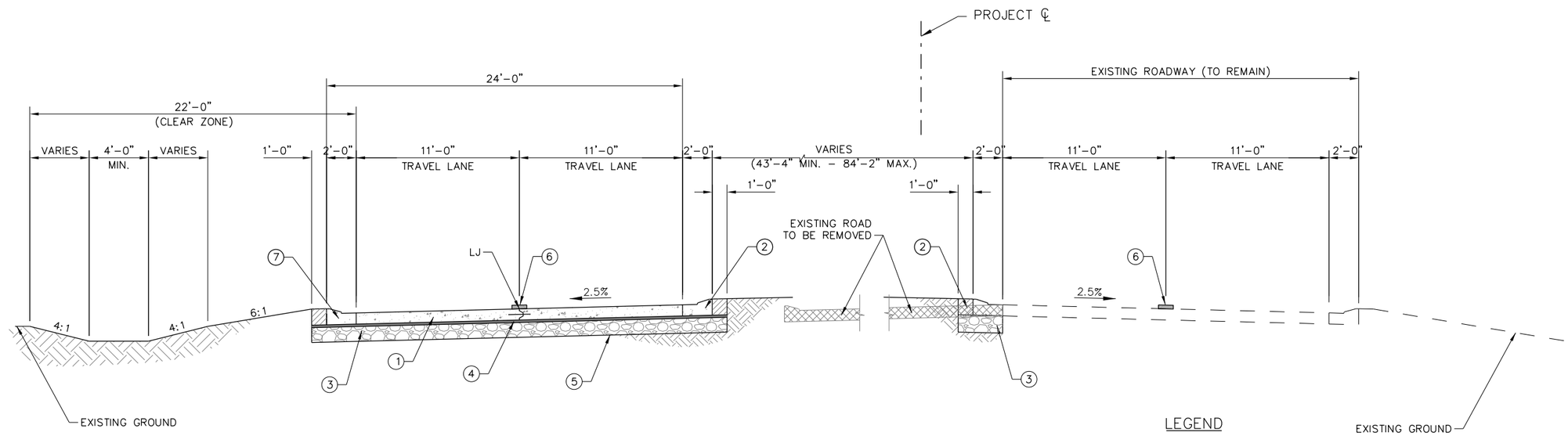

TYPICAL SECTION LA 511
4 LANE DIVIDED ROADWAY

N.T.S.

LEGEND

1. 9" PORTLAND CEMENT CONCRETE PAVEMENT
2. 4" MOUNTABLE CURB AND GUTTER
3. 10" CLASS II BASE (STONE OR RECYCLED P.C.C.)
4. SUPERPAVE ASPHALTIC CONCRETE BASE COURSE LEVEL 1 (2" THICK)
5. GEOTEXTILE FABRIC (CLASS D)
6. PAVEMENT MARKERS AND/OR STRIPING

STATE PROJECT NO. H.001779
F.A.P. NO. STP-0800(507)
ROUTE LA 511
RED RIVER BRIDGE AT JIMMIE DAVIS HIGHWAY
CADDO AND BOSSIER PARISHES

ACCESS BUILD ALTERNATIVE B
TYPICAL SECTION

(ATLAS SHEET 22 OF 26)

DATE: 08/26/2014

LOUISIANA DEPARTMENT OF TRANSPORTATION & DEVELOPMENT

CENTURYLINK CENTER

ARTHUR RAY TEAGUE PKWY.

EXIST. R/W

CENTURYLINK CTR. DR.

EXIST. & REQ'D. R/W & C/A

RAMP B4

REQUIRED CUL-DE-SAC

PROP. SHARED USE TRAIL

PC = 71+98.70

PT = 74+67.66

DEAD END ROAD INSTALLATION

REQ'D R/W

BOSSIER CITY

REQ'D R/W

℄ PROP. JIMMIE DAVIS HWY (LA 511)

LIMIT C/A

MEDICAL DR.

PC = 89+53.41

N

60+00

65+00

70+00

75+00

80+00

85+00

90+00

RAMP B3

EXIST. & REQ'D. R/W & C/A

EXIST. & REQ'D. R/W

PC = 61+31.36

PT = 63+82.57

RAMP B1

RAMP B2

EXIST. & REQ'D. R/W & C/A

EXIST. & REQ'D. R/W

REQ'D R/W

LIMIT C/A

LEGEND:

- EXISTING ROADWAY (TO REMAIN)
- REMOVAL
- NEW AT GRADE ROADWAY AND TRAIL
- NEW ELEVATED ROADWAY AND TRAIL
- REQ'D R/W & C/A

DOTD
LOUISIANA DEPARTMENT OF TRANSPORTATION & DEVELOPMENT

STATE PROJECT NO. H.001779
F.A.P. NO. STP-0800(507)
ROUTE LA 511
RED RIVER BRIDGE AT JIMMIE DAVIS HIGHWAY
CADDO AND BOSSIER PARISHES

ACCESS BUILD ALTERNATIVE C

WITH ACCESS BUILD ALTERNATIVE A
(ATLAS SHEET 23 OF 26)

400 200 100 0 100 200 400

DATE: 08/26/2014

CENTURYLINK CENTER

ARTHUR RAY TEAGUE PKWY.

EXIST. R/W

PROP. SHARED USE TRAIL

CENTURYLINK CTR. DR.

EXIST. & REQ'D. R/W & C/A

RAMP B4

REQUIRED CUL-DE-SAC

BOSSIER CITY

REQ'D R/W

N

PC = 71+98.70

PT = 74+67.66

DEAD END ROAD INSTALLATION

REQ'D R/W

℄ PROP. JIMMIE DAVIS HWY (LA 511)

MEDICAL DR.

PC = 89+53.41

60+00

65+00

70+00

RAMP B3

75+00

EXIST. & REQ'D. R/W & C/A

LIMIT C/A

80+00

85+00

EXIST. & REQ'D. R/W

90+00

PC = 61+31.36

PT = 63+82.57

RAMP B1

RAMP B2

EXIST. & REQ'D. R/W

REQ'D R/W

LIMIT C/A

EXIST. & REQ'D. R/W & C/A

LEGEND:

- EXISTING ROADWAY (TO REMAIN)
- REMOVAL
- NEW AT GRADE ROADWAY AND TRAIL
- NEW ELEVATED ROADWAY AND TRAIL
- REQ'D R/W & C/A

DOTD
LOUISIANA DEPARTMENT OF TRANSPORTATION & DEVELOPMENT

STATE PROJECT NO. H.001779
F.A.P. NO. STP-0800(507)
ROUTE LA 511
RED RIVER BRIDGE AT JIMMIE DAVIS HIGHWAY
CADDO AND BOSSIER PARISHES

ACCESS BUILD ALTERNATIVE C

WITH ACCESS BUILD ALTERNATIVE B
(ATLAS SHEET 24 OF 26)

400 200 100 0 100 200 400

DATE: 08/26/2014

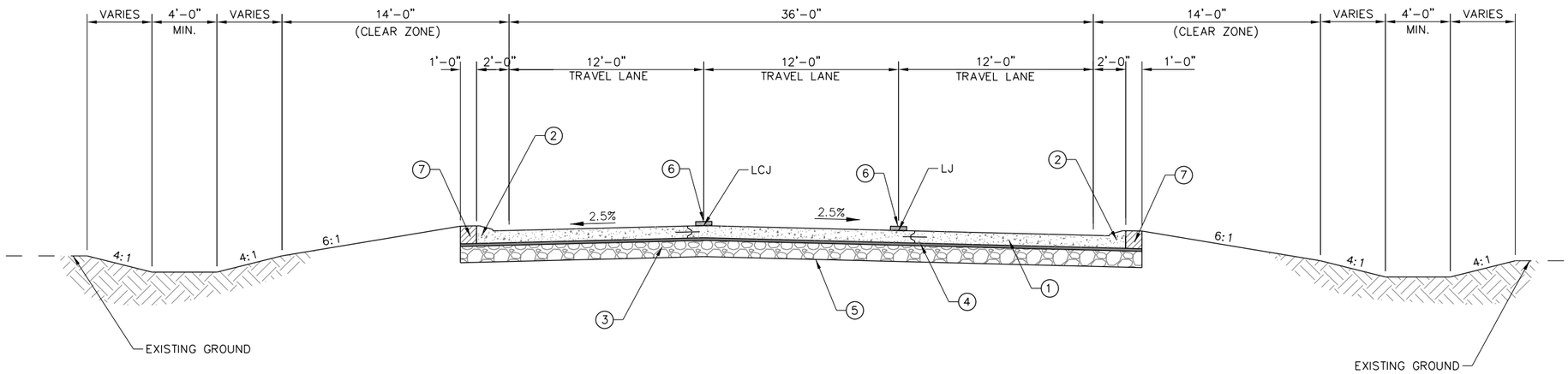

TYPICAL SECTION
CENTURYLINK CONNECTOR
N.T.S.

LEGEND

1. 9" PORTLAND CEMENT CONCRETE PAVEMENT
2. 4" MOUNTABLE CURB AND GUTTER
3. 10" CLASS II BASE COURSE
4. SUPERPAVE ASPHALTIC CONCRETE BASE COURSE LEVEL 1 (2" THICK)
5. GEOTEXTILE FABRIC (CLASS D)
6. PAVEMENT MARKERS AND/OR STRIPING

STATE PROJECT NO. H.001779
F.A.P. NO. STP-0800(507)
ROUTE LA 511
RED RIVER BRIDGE AT JIMMIE DAVIS HIGHWAY
CADDO AND BOSSIER PARISHES

ACCESS BUILD ALTERNATIVE C
TYPICAL SECTION

(ATLAS SHEET 25 OF 26)
DATE: 08/26/2014

LOUISIANA DEPARTMENT OF TRANSPORTATION & DEVELOPMENT

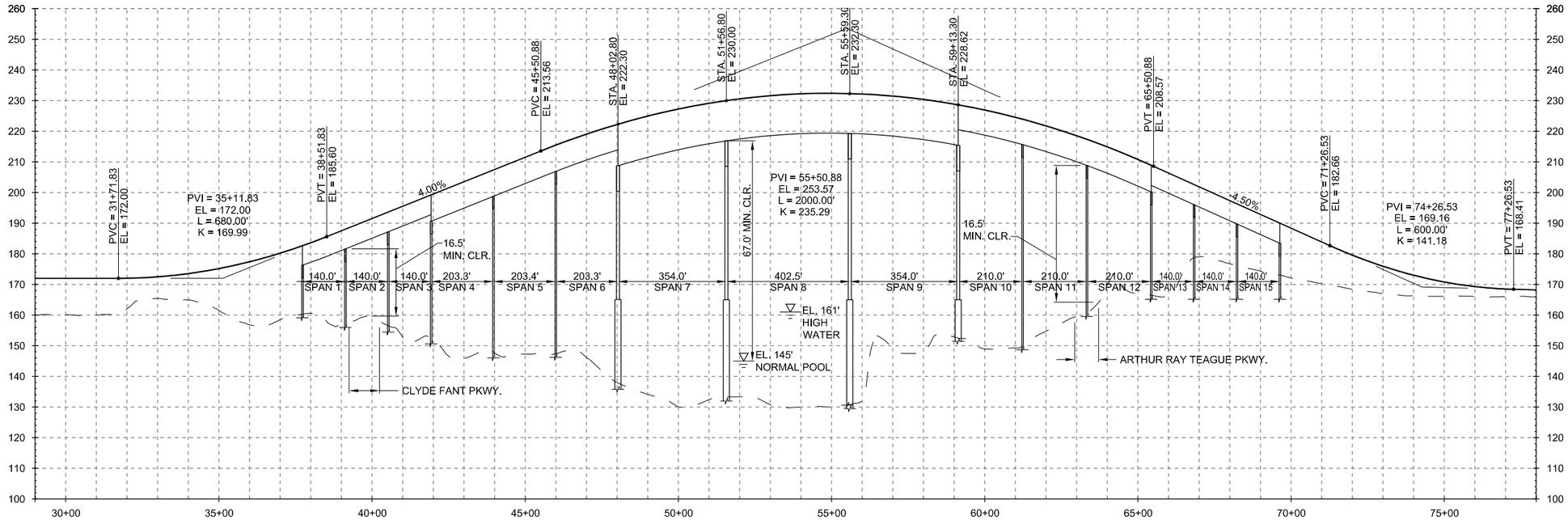

STEEL BRIDGE OPTION

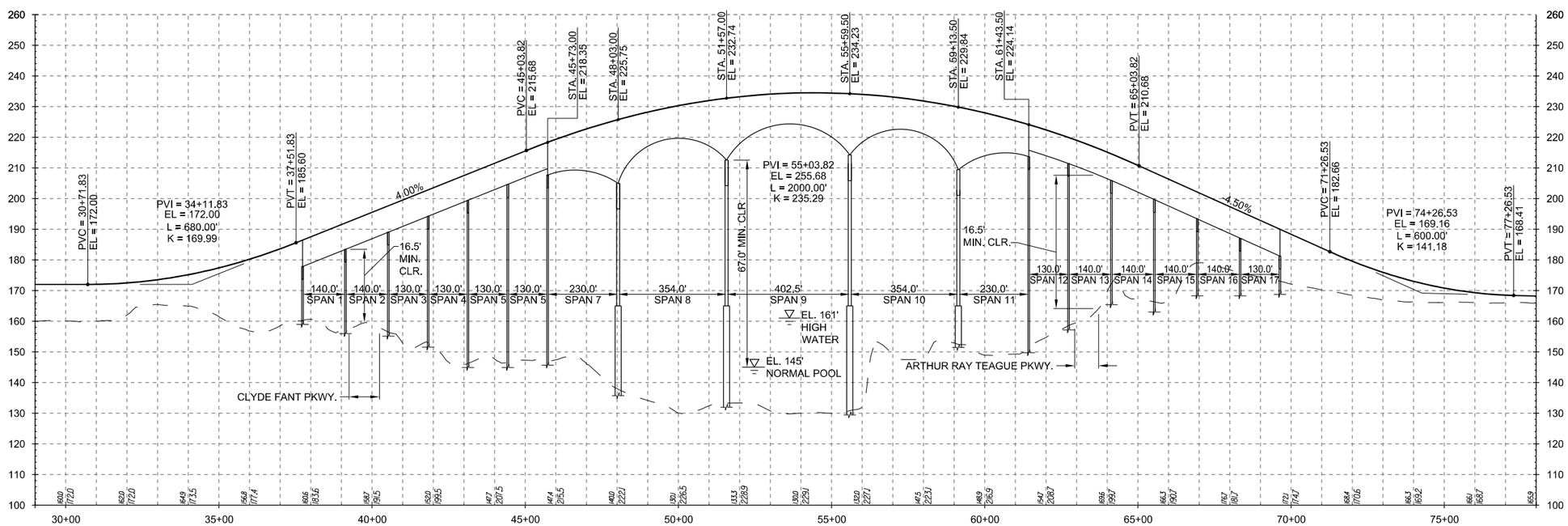

CONCRETE BRIDGE OPTION

STATE PROJECT NO. H.001779
F.A.P. NO. STP-0800(507)
ROUTE LA 511
RED RIVER BRIDGE AT JIMMIE DAVIS HIGHWAY
CADDO AND BOSSIER PARISHES

BRIDGE BUILD ALTERNATIVES 5&7

PROFILE OF STEEL AND CONCRETE OPTIONS

(ATLAS SHEET 26 OF 26)

DATE: 08/26/2014

DOTD
LOUISIANA DEPARTMENT OF TRANSPORTATION & DEVELOPMENT

2.5 No-Build Alternative

Under the No-Build Alternative, the existing Jimmie Davis Bridge would be rehabilitated to extend its useful life for 30 years, but it would continue to operate as a two-lane facility. As a result, there would be no capacity improvements within the LA 511 corridor. The at-grade sections of LA 511 would undergo only minor repairs and maintenance. Two other projects would upgrade the network in the project area, but would not add capacity to LA 511. Table 2-1 presents the projects in the Northwest Louisiana Council of Governments (NLCOG) Short Range Program (Federal Fiscal Years 2013-2015) – Transportation Improvement Projects (TIP) that are included in the No-Build Alternative.

As part of the analysis performed for this EA, the No-Build Alternative served as a benchmark to allow for the meaningful comparison of the magnitude of environmental effects associated with the Build Alternatives.

Table 2-1. Transportation Improvement Program (TIP) for Projects within the Project area

Name	Route	Limits	Improvements	Plan Phase (Year)	Cost Estimate ($000's)	Primary Funding
Sunflower Blvd Extension	Local	Existing Sunflower Blvd. to new A.R. Teague Parkway Extension	New two-lane urban collector	SRP (2014)	750	Local Funding Bossier City
Golden Meadows Dr Extension	Local	US 71 to new A.R. Teague Parkway Extension	New four-lane local boulevard section	SRP (2015)	3,500	Local Funding Bossier City
LA 511: Jimmie Davis Bridge Rehabilitation	State	LA 511 Red River Crossing	Rehabilitation of existing two-lane bridge	2014	20,000	State Bonds

Source: NLCOG Short Range Program (Federal Fiscal Years 2013 - 2015) - Transportation Improvement Projects (TIP), which gives the cost as $10,524,000 and DOTD which increased the estimate to $20,000,000 subsequent to the project being listed in the TIP.

2.6 Alternatives Evaluated in this EA

The No-Build Alternative and the Build Alternatives described above have been evaluated in this EA.

2.7 Preferred Alternative

The final phase of the alternatives development process involves selection of a preferred alternative by the FHWA and DOTD. The selection of the preferred alternative took into consideration the environmental effects and cost of each alternative, public input and comments received at the Public Hearing and during the comment period, and a number of other factors that are summarized in Chapter 4.0.

As a result, the preferred alternative is the combination of Bridge Alternative 7, Trail Alternative 1 with provisos, and Access Alternative B with Access Alternative C.

The alternatives development process and evaluation in this EA provided 16 possible combinations of Build Alternatives. Following the determination that the Rehabilitation Project for the existing bridge would advance, Bridge Alternative 5 was dropped from consideration as described in Section 2.4 of this EA. This left eight possible combinations as it is clear

from traffic data and public opinion that the No Build Alternative would not be considered. In their deliberations, the project team made the following considerations and determinations:

- As Bridge Alternative 7, the construction of a new two-lane westbound bridge, is the only remaining bridge concept, it is included in the selection of the preferred alternative.
- Regarding the Trail, public comments totaled: 16 for, 0 against Trail 1; and 4 for, 1 against Trail 2. Comments supporting a trail, but offering no preference, totaled 6 for and 1 against. These comments and the grade crossings resulting from Trail 2, clearly recommend Trail 1. However, Trail 2 was developed as an alternative with a lower construction cost, and, more importantly, with a lower long term financial burden on DOTD to maintain it in good repair by eliminating any elevated structure that would be separate from the roadway bridge. Therefore, Trail 1 is selected with the proviso that prior to final design, Cooperative Endeavor Agreements, or other binding agreements, will be executed by DOTD and the local jurisdictions. These agreements will transfer all maintenance and liability responsibilities in perpetuity to the local jurisdictions for both the elevated and at-grade segments of the trails from the points, on each side of the river, at which the trail physically separates from the roadway bridge to the points at which they join the existing trails. If agreement is not reached timely, Trail 2 will be constructed.
- As Access Alternative B meets current design standards and public comments for Alternatives A and B were not substantially different, Alternative B is selected notwithstanding the estimated $2.55 million additional cost compared to Alternative A. It was determined that in a project of this scale, a potential savings of that sum does not justify failing to upgrade the roadway.
- Access Alternative C also is selected because, although it is estimated to increase the total project cost by $2.71 million, it was determined Alternative C is justified by the goodwill that would be gained by avoiding property takings on the north side, and the possibility that acquisition of those properties would equal or exceed the estimated construction cost.

2.8 Conceptual Engineering Design Layouts

Typical bridge, roadway, and trail sections and plan sheets were developed for the Build Alternatives as presented above by the Atlas Sheets. A discussion of the structural options of steel and concrete construction for the bridges and a discussion of the conditions in regard to the existing bridge can be found in the *Bridge Type Study Technical Memorandum* found in Appendix E**.**

2.9 Preliminary Implementation Cost Estimate

Construction cost estimates compatible with the level of detail of this study were developed for the Build Alternatives. Construction costs include the cost of at-grade and elevated roadways and shared use trail, associated drainage improvements, some minimization and mitigation costs as discussed below, and the demolition of any abandoned roadway segments. Utility relocations are minor work elements and are assumed to be included in the 25 percent contingency.

Right-of-way and potential relocation costs are included in the cost estimate in Table 2-2. Although the majority of the project would be constructed in existing public transportation rights-of-way, the additional required right-of-way in private ownership or in public, non-transportation ownership would range from 1.482 acres to 4.086 acres depending on the combination of Bridge, Trail, and Access Build Alternatives included in the Preferred Alternative.

The other identified and potential actions required for the minimization and mitigation of project effects, as listed below, can be grouped into two categories. Some will be undertaken by the construction contractor and, therefore, already are included in the construction cost estimate. The others are relatively minor work elements and are assumed to be included in the 25 percent contingency.

Minimization and Mitigation included in Construction Estimate

Community Facilities - To minimize the inconvenience to Riverpark Church of having to travel westbound to a U-turn some distance from the church under Bridge Build Alternative 5, which closes the median opening at the existing driveway, a U-turn will be provided at East Dixie Meadow Road.

The effects on CenturyLink Center of Access Build Alternatives A and B, if implemented without Alternative C, will be avoided by the completion of the interchange of LA 511 and Arthur Ray Teague Parkway.

Traffic - Temporary effects to traffic during construction will be addressed by a Maintenance of Traffic Plan.

Soils - Soil disturbance, moderate cut and fill, and potential soil erosion impacts will be mitigated through the use of BMPs to reduce offsite movement of exposed soils during and after construction.

Vegetation Significant Trees and Wildlife - During final design or construction, if any significant trees are identified, the procedures defined in Engineering Directive and Standards Manual EDSM I.1.1.21 Treatment of Significant Trees in DOTD Right-of-Way will be followed. Impacts to wildlife resulting from sediment deposition or increased turbidity will be reduced to less than significant levels by the proper use of BMPs.

Threatened and Endangered Species - DOTD will avoid construction during the breeding seasons of the Interior Least Tern and the Pallid Sturgeon to the extent that it is feasible. If construction during those periods is unavoidable, further consultation with LNHP will be initiated to determine what measures are suggested.

Air Quality - Air quality impacts due to construction are possible, particularly on dry and windy days. Potential mitigation techniques include development of site-specific traffic management plans; temporary signage and other traffic controls; designated staging areas, worker parking lots (with shuttle bus service if necessary), designated truck routes, and prohibition of construction vehicle travel during peak traffic periods. Potential fugitive dust impacts will be mitigated through good "housekeeping" practices such as water sprays during demolition; wetting, paving, or landscaping exposed earth areas; covering dust-producing materials during transport; limiting dust-producing construction activities during high wind conditions; and providing street sweeping and tire washes for trucks leaving the site.

Minimization and Mitigation not currently included in Construction Estimate and Assumed to be covered by the Contingency

Environmental Justice - Comply with any potential requests by Hispanic residents for supplying project information in Spanish.

Cultural Resources - Alternative 5 would “use” the bridge as defined in the Programmatic Section 4(f) Evaluation and Approval for FHWA Project that Necessitate the Use of Historic Bridges. The procedures outlined in the Programmatic Evaluation will be followed.

Aesthetics - Under Bridge Build Alternatives 5 and 7, context sensitive design elements will be examined during final design to make the new structure aesthetically pleasing and compatible with the existing viewshed across the Red River.

Wetlands and Waters of the U.S. - Mitigation requirements for Bridge Build Alternatives 5 and 7 will require Section 404 and Section 10 permits from USACE, which will be obtained in coordination with a Section 9 permit from the USCG. Construction of Bridge Build Alternatives 5 or 7 also would require coordination with the USCG to reduce impacts on navigation in the Red River.

Groundwater - Additional investigation of the potential effects to the existing ground water wells will be undertaken during final design. Minimization or mitigation measures will be developed if potential impacts are identified at that time.

Floodplains - Mitigation requirements for Bridge Build Alternatives 5 and 7 will be accomplished through the permit process explained in Section 3.25.

Table 2-2 provides a summary of estimated project implementation costs in millions of 2014 dollars. Table 2-3 accumulates these in all possible combinations of Bridge and Access Alternatives to present an estimate of the total estimated construction cost for whichever combination is selected as the Preferred Alternative. It should be noted that project costs could increase in the future due to potential price increases in construction materials and labor. Estimates of these increases cannot be made accurately until the date of construction is known.

At this time, no funding has been identified; therefore, no date is available. Possible funding sources would be the Capacity Program and funds made available by the Northwest Louisiana Council of Governments (NLCOG), the Metropolitan Planning Organization (MPO) or local sources.

Table 2-2. Preliminary Implementation Cost Estimate (millions 2014 $) by Alternative

Alternative	Right-of-way	Relocation	Construction	Contingency (25%)	Total Cost
5 and 1 Steel	$0.03	-	$81.61	$20.41	$102.05
5 and 2 Steel	$0.03	-	$78.44	$19.62	$ 98.09
5 and 1 Concrete	$0.03	-	$81.07	$20.28	$101.38
5 and 2 Concrete	$0.03	-	$76.93	$19.24	$ 96.20
7 and 1 Steel	$0.02	-	$52.37	$13.10	$ 65.49
7 and 2 Steel	$0.02	-	$49.21	$12.31	$ 61.54
7 and 1 Concrete	$0.02	-	$52.01	$13.01	$ 65.04
7 and 2 Concrete	$0.02	-	$47.87	$11.97	$ 59.86
Trail 1 At-Grade	$0.01	-	$ 0.90	$ 0.23	$ 1.14
Trail 2 At-Grade	$0.01	-	$ 2.33	$ 0.59	$ 2.92
A	$4.67	$ 0.56	$ 2.40	$ 1.91	$ 9.54
B	$4.71	$ 0.56	$ 4.40	$ 2.42	$ 12.09
C	$1.57	-	$ 0.60	$ 0.54	$ 2.71

Table 2-3. Preliminary Implementation Cost Estimate (million 2014 $) for each Combination of Alternatives

Combination of Alternatives	Preliminary Cost	
	Steel Option	Concrete Option
Alternatives 5 and 1 and A with C	$115.44	$114.76
Alternatives 5 and 2 and A with C	$113.26	$111.38
Alternatives 5 and 1 and A without C	$112.73	$112.05
Alternatives 5 and 2 and A without C	$110.55	$108.66
Alternatives 5 and 1 and B with C	$117.99	$117.31
Alternatives 5 and 2 and B with C	$115.81	$113.93
Alternatives 5 and 1 and B without C	$115.28	$114.60
Alternatives 5 and 2 and B without C	$113.10	$111.21
Alternatives 7 and 1 and A with C	$ 78.88	$ 78.43
Alternatives 7 and 2 and A with C	$ 76.71	$ 75.04
Alternatives 7 and 1 and A without C	$ 76.16	$ 75.71
Alternatives 7 and 2 and A without C	$ 74.00	$ 72.33
Alternatives 7 and 1 and B with C	$ 81.43	$ 80.98
Alternatives 7 and 2 and B with C	$ 79.26	$ 77.59
Alternatives 7 and 1 and B without C	$ 78.71	$ 78.26
Alternatives 7 and 2 and B without C	$ 76.55	$ 74.88

THIS PAGE INTENTIONALLY LEFT BLANK

3.0

AFFECTED ENVIRONMENT

3.0 Affected Environment

The following sections define the current natural, built, and human environmental resources within the project and study areas, the potential effects on those resources of the No-Build and Build Alternatives, and any measures taken or proposed to avoid, minimize, or mitigate potential adverse impacts. As background, the Stage 0 Environmental Checklist prepared in conjunction with the Stage 0 Feasibility Study is found in Appendix A.

Due to the substantial investment into the existing structure being made through the rehabilitation project, it has been determined by FHWA and DOTD that Bridge Build Alternative 5 is no longer under consideration as an element of the Preferred Alternative under this NEPA action. It has not been removed from this EA to demonstrate that a full range of alternatives were developed and to avoid any unnecessary delay in the completion of this NEPA process.

3.1 Consistency with Local, State and Regional Land Use Policies

The *Northwest Louisiana Long Range Transportation Plan Update 2009-2030* of the Northwest Louisiana Council of Governments (NLCOG) includes the project engineering for a Red River Crossing at Jimmie Davis Highway (LA 511) in the Short Range Program (FY 2013-2015) and the project construction in the Long Range Program (FY 2016 – 2030). The project is described as "LA 511 (Jimmie Davis Highway) Red River crossing - New 4-lane bridge structure with Bicycle Pedestrian facilities."

As indicated in the regional plan described above and in local plans as described below, the community supports a connection between the Red River Bicycle Trail in Shreveport and the Arthur Ray Teague Jogging Trail in Bossier City, which terminate on either side of the Red River in the vicinity of LA 511. Currently, there is no provision for bicycles or pedestrians to cross the river at this location.

- The *Bossier City Comprehensive Plan (2002)* states that throughout the public involvement process, several recommendations were made for additional pedestrian facilities including:
  - Pedestrian crossing over the Red River
  - Connect a bike trail over to Shreveport: Jimmie Davis Bridge
- The *Shreveport-Caddo 2030 Master Plan (2010)* states that a safe and attractive pedestrian and bicycling network integrated with vehicle transportation would:
  - Support a "Complete Streets" policy that provides roadway space for bicycles, pedestrians, automobiles and transit vehicles and integrates greenway and off-road bicycle routes with the roadway system.
  - Integrate pedestrian networks and bikeways into the development of public spaces and link community destinations through on and off-street facilities.

3.2 Land Use and Zoning

Land use in the project area is suburban in character with large roadway rights-of-way along the Arthur Ray Teague Parkway on the east side of the river in Bossier City and along the Clyde Fant Parkway on the west side of the river in Shreveport, as shown on Figure 3-1 Existing Land Use.

Jimmie Davis Highway, LA 511 on the east side of the river, is lined with commercial, institutional, and vacant properties. On the west side, the land to the south is vacant, and

the land to the north nearest the river is a large parcel of Riverpark Church, an institutional use. Farther west on the north side, there is a residential subdivision.

Beyond the properties along LA 511, there is suburban single family development to the south in Bossier City. To the north in Bossier City there is CenturyLink Center, an assembly hall, and considerable areas of vacant land with a scattered development of institutional uses and group homes. Barksdale Boulevard (US 71) at the eastern terminus of the project area is characterized by commercial strip development near the intersection.

The Shreveport Zoning Ordinance (Shreveport, Louisiana, Code of Ordinances, Part II - Code of Ordinances, Chapter 106 Zoning) generally supports the existing land use. The residential development is zoned R1-D, which provides for detached single family housing. The remainder of the land west of Clyde Fant Parkway is zoned B-1 Buffer Business District, B-2 Neighborhood Business, and B-3 Community Business. These districts call for neighborhood office, institutional, and commercial uses. The only development in these areas is the Riverpark Church, which is a permitted use. The remainder of the land currently is vacant except for a utility installation north of the church. The LA 511 / Clyde Fant Parkway interchange and the Clyde Fant Parkway right-of-way and the Charles and Marie Hamel Memorial Park are zoned RA Residential Agricultural, which does not allow development other than single family residences. However, it is entirely in public ownership, and no uses other than passive recreation and the Red River Bicycle Trail currently exist.

The Bossier City Zoning Ordinance (Bossier City, Part II - Code of Ordinances, Appendix a - Unified Development Code, Article 4. Zoning Districts) also generally supports the existing land use. Along the north side of Jimmie Davis Highway, the abutting properties, including the vacant ones, are zoned primarily B-3 General Business. The parcel at the west corner of Medical Drive is zoned B-2 Limited Business, and the parcel on the east corner is zoned B-1 Business / Office. On the south side of LA 511, existing commercial uses are zoned a mix of B-1, B-2, and B-3. Vacant areas and the Barksdale Baptist Church campus are zoned R-A Residential Agricultural. There also is a small property that is zoned I-1 Light Industrial.

North of LA 511 the Arthur Ray Teague Parkway right-of-way and the CenturyLink Center property are zoned RFD Riverfront Development, which is defined as follows “The purpose of the Riverfront Development District is to provide for complementing recreational and commercial uses that take advantage of the Red River riverfront’s scenic characteristics, convenient location, and proximity to existing commercial activities.” In addition, there is the Arthur Ray Teague Parkway overlay district (ARTP-OD). The text states that “The purpose of the Arthur Ray Teague Parkway overlay district is to preserve and encourage development of an attractive gateway corridor to the parkway that is sensitive to and helps maintain the vitality of the adjacent residential neighborhood.”

3.2.1 No-Build Alternatives

The No-Build Alternative would not change the general pattern of development in the project area, which is shaped by local economic factors, market-driven demand, and local plans and zoning to meet the needs of an increasing population.

When compared with the Build Alternatives, the No-Build Alternative would result in increased congestion, which may result in a slower rate of development than would occur under the Build Alternatives.

Figure 3-1. Existing Land Use

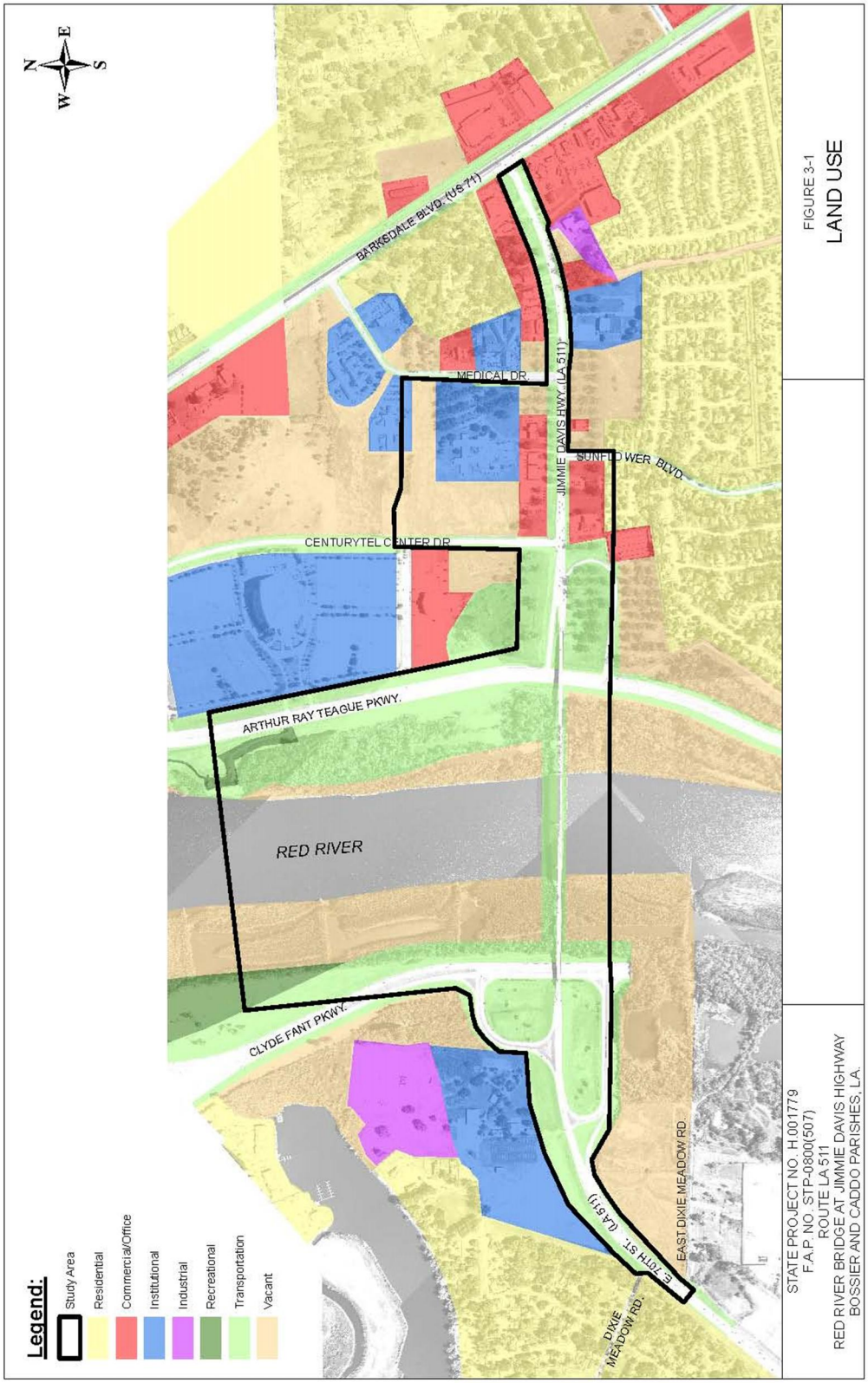

3.2.2 Build Alternatives

The Build Alternatives also would not change the general pattern of development in the project area because local plans and zoning ordinances generally support the existing pattern of development. Given the improvement in traffic and circulation, however, it would be expected that new development would occur more rapidly in the vacant areas of the project area under the Build Alternative than under the No-Build Alternative.

3.2.3 Avoidance, Minimization, and Mitigation

There is no need for measures to avoid, minimize, or mitigate the effects of the Build Alternatives on Land Use and Zoning.

3.3 Right-of-way Acquisition and Relocation

The amount of additional required right-of-way is shown in Table 3-1. There also is the potential for access impacts or relocation requirements for three properties on the south side of LA 511 and for three properties on the north side of LA 511 between the Arthur Ray Teague Parkway and Sunflower Boulevard. Owners and occupants of the affected properties, including both areas to be acquired and the potential relocations, would be afforded all protections available under federal and state requirements including the Uniform Relocation Assistance and Real Property Acquisition Policies Act of 1970 (Uniform Act).

Table 3-1. Additional Required Right-of-way and Potential Relocations

Alternative	Acres of Additional Required Right-of-Way	Potential Commercial Relocations
5	0.034	0
7	0.018	0
At-grade Trail 1	0.396	0
At-grade Trail 2	0.399	0
A	1.124	3
B	1.142	3
C*	2.570	0

***This area would be required in addition to the requirements of either Alternative A or Alternative B.**

3.3.1 No-Build Alternative

No right-of-way acquisition or relocation would be required under the No-Build Alternative.

3.3.2 Build Alternatives

It should be noted that portions of Bridge Alternatives 5 and 7 and the at-grade portions of Trail Alternatives 1 and 2 would utilize portions of existing public property, especially the rights-of-way of Clyde Fant Parkway and Arthur Ray Teague Parkway. The acreage of this public property is not counted in the totals presented. The areas of additional required right-of-way in private ownership, or public ownership but not available for transportation use, are counted.

The required areas of additional required right-of-way are within vacant properties or the vacant portions of developed parcels. The total number of acres ranges from 1.538 for Alternatives 7, A, and the at-grade Trail 1 to 4.145 for Alternatives 5, B, C, and the at-grade Trail 2. Other than the parking areas of the relocated properties, no structures or auxiliary uses would be affected. Figure 3-2 shows the portions of additional required right-of-way to be acquired.

Figure 3-2. Existing and Additional Required Right-of-Way

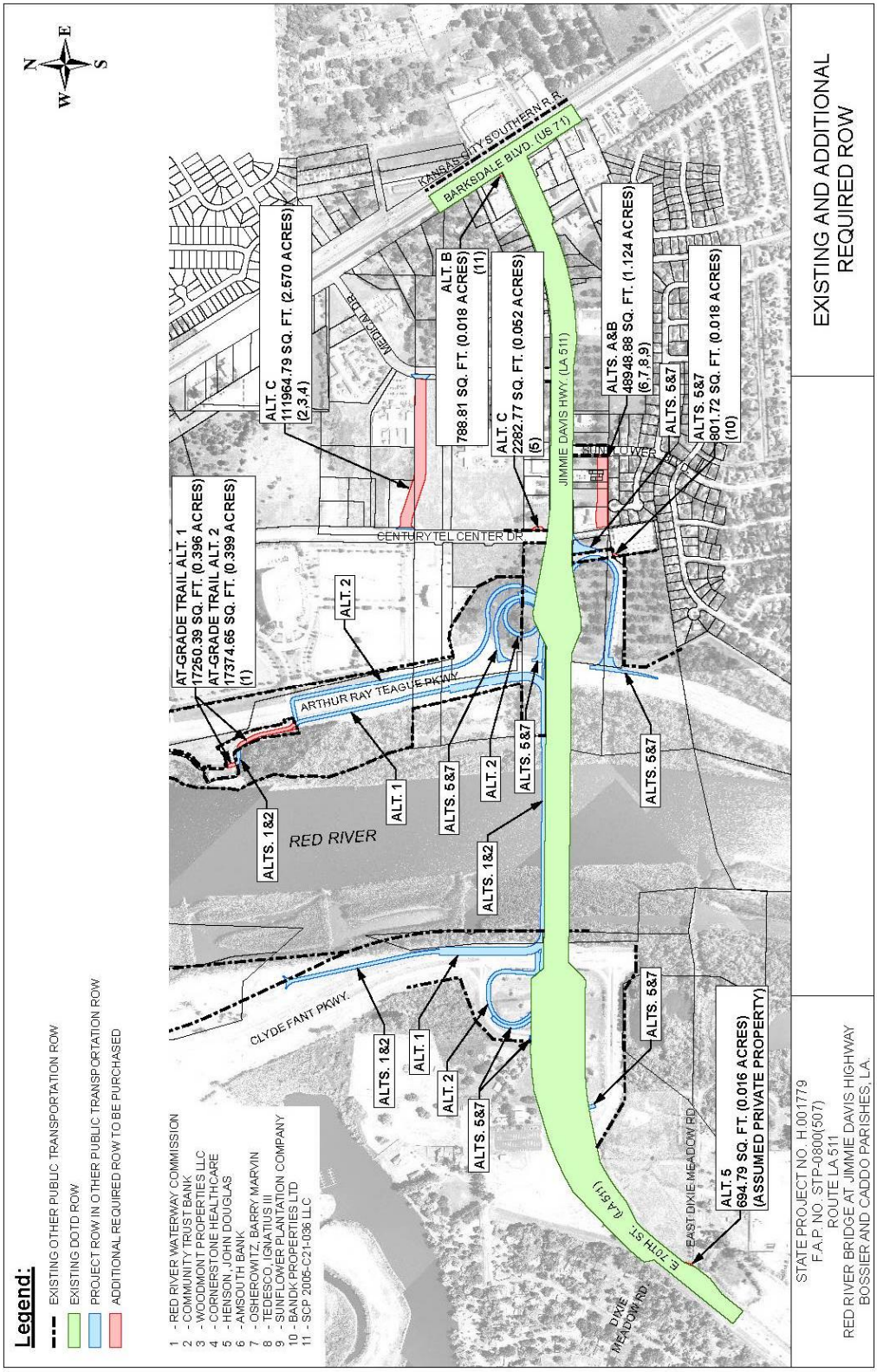

A potential for relocation due to loss of access to Jimmie Davis Highway, however, would result from the construction of the ramps connecting Arthur Ray Teague Parkway and LA 511, which are included in Access Build Alternatives A and B.

On the south side, the ramp connecting the Arthur Ray Teague Parkway to eastbound LA 511 requires the abandonment of Zach Avenue and the imposition of control of access along the existing LA 511 right-of-way west of Sunflower Boulevard. The abandonment of Zach Avenue and the imposition of control of access would eliminate the existing access to the four properties south of the Jimmie Davis Highway and west of Sunflower Boulevard. One of the properties is accessed from Zach Avenue, and the other three are within the control of access limits of the ramp. Three of these properties are developed with commercial uses and one is vacant.

On the north side, two properties potentially would have access impacts from the control of access required for the ramp that connects westbound Jimmie Davis Highway to the Arthur Ray Teague Parkway. The properties, their locations, and the estimated relocation costs, including moving and reestablishment expenses, are listed in Table 3-2 and pictured on Figure 3-3 in relation to Access Build Alternative A. The same effects would occur under Access Build Alternative B. While their access would be changed, the business at 1609 Jimmie Davis Highway would maintain its existing access on CenturyLink Center Drive and the business at 1611 Jimmie Davis Highway would maintain one of its existing driveways to Jimmie Davis Highway.

Table 3-2. Potential Access Impacts and Relocation Costs

Site	Location	Address	Alternatives	Moving	Reestablishment	Total Relocation
BLM Storage	South side	5004 Zach Avenue	A and B	$294,400	$10,000	$304,400
Regions Bank	South side	1600 Jimmie Davis Highway	A and B	$100,000	$10,000	$110,000
Vacant Lot	South side	1604 Jimmie Davis Highway	A and B	N/A	N/A	N/A
Professional Plaza: Baker Title & Abstract Gateway Title Co., LLC Assurance Financial Group, LLC Centerline Plan Services Chris Gardner, DDS Morris White, DDS	South side	1608 Jimmie Davis Highway	A and B	$110,000	$60,000	$170,000
Henson's Carpet One Floor	North side	1609 Jimmie Davis Highway	A and B	$75,000	$10,000	$85,000
Functional Capacity Experts	North side	1611 Jimmie Davis Highway	A and B	$25,000	$10,000	$35,000
Dental Office	North side	1611 Jimmie Davis Highway	A and B	$125,000	$50,000	$175,000

Source: AECOM Technical Services Inc.

The access impacts to the properties on the south side of LA 511 would be minimized by the construction of a new access roadway from Sunflower Boulevard to the BLM Storage along the southern limit of the properties located at 1600, 1604, and 1608 Jimmie Davis Highway. This roadway would avoid the

Figure 3-3. Potential Access Impacts

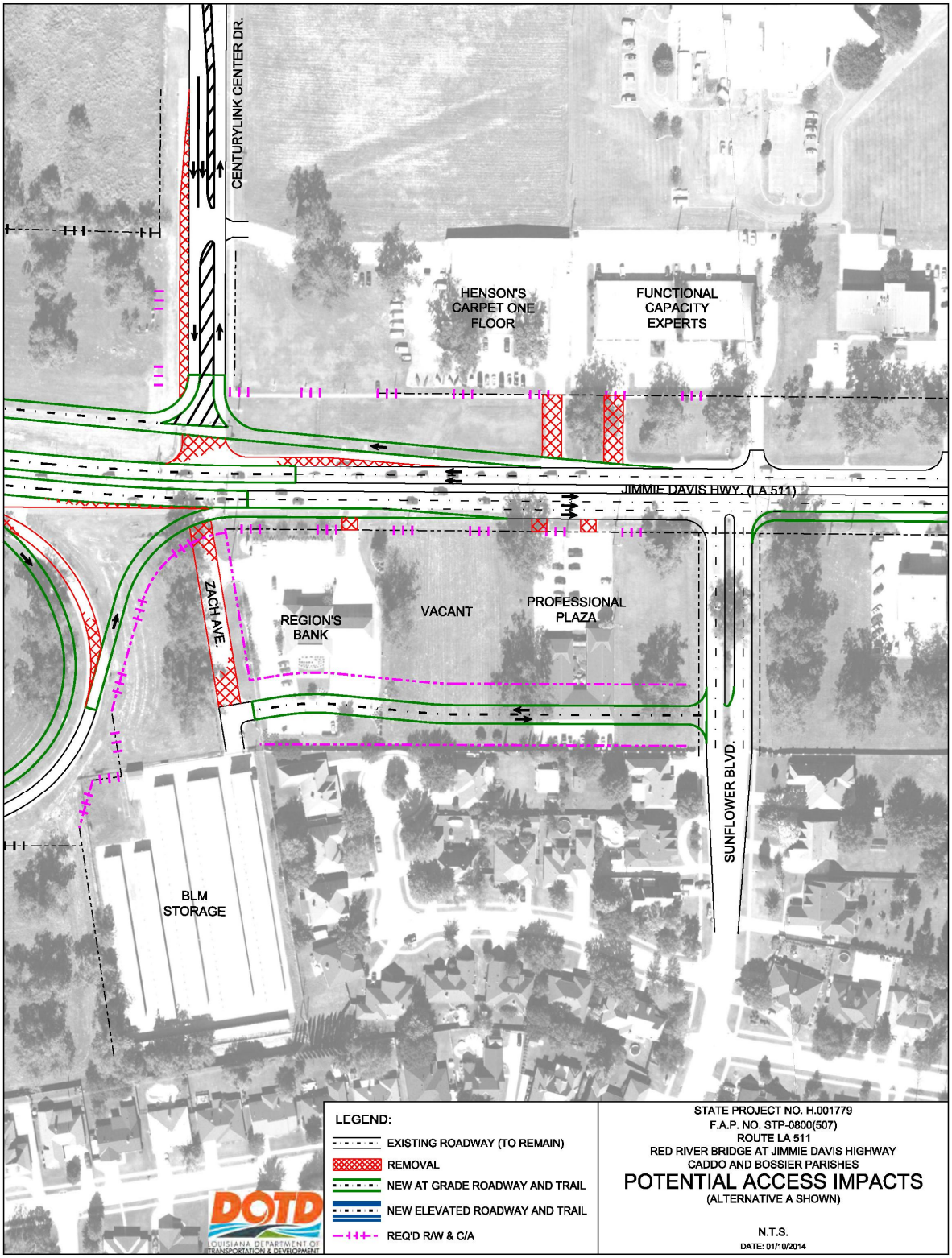

need to acquire and relocate BLM Storage and would provide access from the rear for the continuing use of the other properties currently accessed from Jimmie Davis Highway. The acreage of additional required right-of-way for this new access road is included under Alternatives A and B in Table 3-3.

The driveway closures on the north side of Jimmie Davis Highway would be avoided by the selection of Alternative C as described in Section 3.6.2, which closes the intersection of the ramp with CenturyLink Center Drive and allows the driveways to remain open.

Alternative C would require a sliver of land from the property at 1609 Jimmie Davis Highway to construct a cul-de-sac at the terminus of CenturyLink Center Drive. The acreage of additional required right-of-way for Alternative C, which is vacant, undeveloped land, is found in Table 3-1.

All right-of-way takings, including the new road on the south side and the cul-de-sac for CenturyLink Center Drive, will be mitigated through acquisition in accordance to the Uniform Relocation Assistance and Real Property Acquisition Policies Act of 1970 (Uniform Act). The estimated cost of the acquisition of additional required right-of-way is presented in Table 3-3.

Table 3-3. Right-of-Way Acquisition Costs

Alternative	Acres	Acquisition
5	0.034	$ 31,800
7	0.018	$ 16,500
At-grade Trail 1	0.396	$ 10,000
At-grade Trail 2	0.399	$ 10,000
A	1.124	$ 4,670,000
B	1.142	$ 4,707,000
C*	2.570	$ 1,565,200

***This cost would be required in addition to the costs of either Alternative A or Alternative B.**

3.3.3 Avoidance, Minimization, and Mitigation

The occupants of some of the properties with potential access impacts may request relocation of their businesses if they believe that the Preferred Alternative does not provide the access required for the continued pursuit of their business activity. These businesses could include the following:

- Regions Bank, 1600 Jimmie Davis Highway, as a result of access being relocated to the new access roadway south of Jimmie Davis Highway under either Alternative A or B;
- Professional Plaza, 1608 Jimmie Davis Highway, or one or more of the tenants, as a result of access being relocated to the new access roadway south of Jimmie Davis Highway under either Alternative A or B; or
- Henson's Carpet One Floor, 1609 Jimmie Davis Highway, as a result of Alternative A or B without the addition of Alternative C.

BLM Storage at 5004 Zach Avenue is not included because the new road on the south side proposed in Access Build Alternatives A and B would maintain access to this property, and Functional Capacity Experts and the Dental Office at 1611 Jimmie Davis Highway are not included because one of the existing driveways would remain in service whether Alternative C is selected or not.

If these requests are received, relocation assistance will be provided in accordance with the Uniform Relocation Assistance and Real Property Acquisition Policies Act of 1970, (Uniform Act).

3.4 Demographics

Population, Race, and Ethnicity

Population trends in the State of Louisiana, Bossier Parish, and Caddo Parish are presented in Table 3-4. Louisiana experienced a 1.4 percent increase in population from 2000 to 2010. Over the same period the population of Bossier Parish increased by 16.0 percent and the population of Caddo Parish increased 1.1 percent.

Table 3-4. Population Trends: 2000 to 2010

Location	Population		Percent Change
	2000	2010	
Louisiana	4,468,976	4,533,372	+ 1.4
Bossier Parish	98,310	116,979	+16.0
Caddo Parish	252,161	254,969	+ 1.1

Source: US Census

Within the project area, the 2010 US Census indicates that the total population is 19,152. Table 3-5 presents the racial characteristics of the 2010 census tracts that comprise the project area compared to the state of Louisiana and to Bossier and Caddo Parishes.

Table 3-5. State, Parish and Project area Population by Race and Ethnic Origin (2010)

Category	Louisiana		Bossier Parish		Caddo Parish		Project area Census Tracts	
Total population	**4,533,372**		**116,979**		**254,969**		**19,152**	
Race and Ethnic Origin	**Number**	**Percent**	**Number**	**Percent**	**Number**	**Percent**	**Number**	**Percent**
White Alone	**2,836,192**	**62.6**	**84,430**	**72.2**	**124,942**	**49.0**	**14,189**	**74.1**
Black or African American Alone	1,452,396	32.0	24,461	20.9	120,264	47.2	3,557	18.6
American Indian and Alaskan Native Alone	30,579	0.7	641	0.5	1,092	0.4	76	0.4
Asian Alone	70,132	1.5	1,927	1.6	2,683	1.1	691	3.6
Native Hawaiian and Other Pacific Islander Alone	1,963	0.0	163	0.1	126	0.0	10	0.1
Some Other Race Alone	69,227	1.5	2,805	2.4	2,104	0.8	96	0.5
Two or More Races Alone	72,883	1.6	2,552	2.2	3,758	1.5	533	2.8
Total Non-White	**1,697,180**	**37.4**	**32,549**	**27.8**	**130,027**	**51.0**	**4,963**	**25.9**
Hispanic or Latino	192,560	4.2	7,026	6.0	6,129	2.4	812	4.2

Source: 2010 US Census

As shown, the percent of non-white minority residents in the project area is lower than the state or either parish while the percent of Hispanic residents is equal to the percent in the state, lower than in Bossier Parish and higher than in Caddo Parish.

3.5 Environmental Justice

An analysis of the potential project impact on minority and low-income communities was undertaken in compliance with the implementing regulations of Executive Order 12898 – "Federal Actions to Address Environmental Justice in Minority Populations and Low-Income Populations" (February 11, 1994). The order specifies actions to be taken on a range of issues that are intended to promote nondiscrimination in federal actions, to provide minority and low-income communities equal access to public information regarding a federal action, and to provide an opportunity for public participation in the evaluation of a federal action in matters relating to human health and the environment. In particular, the order stipulates that:

To the greatest extent practicable and permitted by law… each Federal agency shall make achieving environmental justice part of its mission by identifying and addressing as appropriate, disproportionately high and adverse human health or environmental effects of its programs, policies, and activities on minority populations and low income population. (Executive Order Section I-101).

Each Federal Agency shall conduct its programs, policies, and activities that substantially affect human health or the environment, in a manner that ensures that such programs, policies, and activities do not have the effect of excluding persons…from participation in, denying persons the benefits of, or subject persons…to discriminations under such programs, policies, and activities, because of their race, color, or national origin (Order Section 2-2).

A demographic profile of the US Census units that contain the project area was compiled to address the following questions posed by Executive Order 12898:

- Does the potentially affected community include minority and/or low income populations?
- Are the environmental impacts likely to fall disproportionately on minority and/or low-income members of the community and/or tribal resources?

Demographic Profile, Environmental Justice

Table 3-5 shows the non-white population and Table 3-6 shows the poverty status for the 2010 US Census Tracts that lie within the project area. These are Tracts 108.5 and 110.02 in Bossier Parish and Tracts 229 and 239.01 in Caddo Parish.

Table 3-6. Jimmie Davis Highway Corridor Income Characteristics (2010) Project Area

Louisiana	Bossier Parish	Caddo Parish	Project Area Census Tracts	Louisiana
Median Household Income	$43,484	$53,275	$40,886*	$52,469
% Population Below Poverty Level	18.7%	13.4%	19.3%	9.1%

*This quantity is the average of the median incomes of the Project Area Census Tracts

Source: 2010 US Census

The non-white residents in the project area account for 25.9 percent of the project area population, which is lower than the non-white percentages of the Caddo Parish population (51.0 percent) and of Bossier Parish (27.8 percent). Also, the project area does have a Hispanic population that exceeds the combined percent of the Hispanic populations of Bossier and Caddo Parishes by 0.7 percentage points.

Within the project area, 19.3 percent of the population was living in poverty compared to 18.7 percent in Bossier Parish and 13.4 percent in Caddo Parish.

Project Effect Discussion, Environmental Justice

The service benefits of the proposed improvements to Jimmie Davis Highway (LA 511) and the crossing of the Red River would be available to all affected communities along the corridor, regardless of community make-up or income level. The public involvement program has been implemented to inform all affected parties, establish a dialogue, and develop workable and reasonable design solutions.

The project area has been determined to be an environmental justice area based on the percentage of the population in the project area living below poverty in 2010.

3.5.1 No-Build Alternative

The No-Build Alternative would involve no new construction activity. No impact on minority or low-income communities or designated tribal resources would occur.

3.5.2 Build Alternatives

Although the percentage of the project area population living in poverty in 2010 exceeds the percentages in Bossier and Caddo Parishes, the Build Alternatives would have no disproportionate effect on minority and/or low-income members of the community and/or tribal resources based on the racial, ethnic, and economic characteristics of the project area because no residential areas would be affected, the service benefits of the project would be available to all affected communities along the corridor, and the public involvement program has been implemented to inform all affected parties, establish a dialogue, and develop workable and reasonable design solutions.

3.5.3 Avoidance, Minimization, and Mitigation

No measures are required with the exception of complying with any potential requests by Hispanic residents for supplying project information in Spanish.

3.6 Traffic

The *Traffic Study* addresses the current traffic conditions and assesses future transportation impacts associated with and without the construction of a new LA 511 Jimmie Davis Bridge over the Red River within the 2.0 mile segment of LA 511 from Dixie Meadows Road in Shreveport to US 71 (Barksdale Boulevard) in Bossier City. It examines the impact of a new four (4) lane system on the existing four (4) intersections east of the bridge and what impact a full interchange with the Arthur Ray Teague Parkway would have on Jimmie Davis Highway, the section of the project area east of the bridge in Bossier City.

The four intersections studied include the following:

- The intersection of LA 511 at CenturyLink Center Drive/Zach Avenue is an existing four legged semi-actuated interconnected signalized intersection. CenturyLink Center Drive is a three-lane city street with a center bidirectional left turn lane that extends northward from LA 511. Zach Avenue is a two-lane city street that extends southward from LA 511 for approximately 320 feet terminating at the entrance of a storage facility.
- The intersection of LA 511 at Sunflower Boulevard is an existing four legged semi-actuated interconnected signalized intersection. Sunflower Boulevard is a two-lane city

street that extends southward from LA 511 to Sunflower Road. The northern approach is comprised of a two-way driveway.

- The intersection of LA 511 at Medical Drive is an existing three-legged unsignalized intersection with stop controls on the Medical Drive approach. Medical Drive is an existing two-lane city street that extends northward from LA 511 and wraps around and intersects US 71.
- The intersection of LA 511 at US 71 (Barksdale Boulevard) is an existing three-legged semi-actuated interconnected signalized intersection. US 71 is a four-lane divided highway that extends north-south.

3.6.1 No-Build Alternative

The No-Build Alternative would involve no new construction or right-of-way acquisition and would not result in changes in traffic patterns. Table 3-7 presents the existing 2013 and projected design year 2036 Average Daily Traffic (ADT) volumes under the No-Build Alternative for the links within the project area. Table 3-8 presents the Directional No-Build Peak Hour Level of Service (LOS) for the same links.

Table 3-8 shows the LA 511 Jimmie Davis Bridge will continue to operate at a LOS "E/F" through 2016 and by 2036 will be operating at a LOS of "F" during both peak hours unless capacity improvements are made.

Table 3-7. No-Build ADT Volumes

Link		2013	2036
E. 70th Street:	East Dixie Meadow Road to Clyde Fant Parkway	39,845	50,091
Jimmie Davis Bridge	Clyde Fant Parkway to CenturyLink Center Drive	27,955	36,780
Jimmie Davis Highway	CenturyLink Center Drive to Sunflower Boulevard	20,076	26,414
Jimmie Davis Highway	Sunflower Boulevard to Medical Drive	18,192	23,935
Jimmie Davis Highway	Medical Drive to Barksdale Boulevard	17,343	22,818

Table 3-8. No-Build LOS

Along LA 511			2013 Existing LOS	2016 No-Build LOS	2036 No-Build LOS
E. 70th Street: East Dixie Meadow Road to Clyde Fant Parkway	WB	AM	C	C	C
		PM	C	C	D
	EB	AM	B	B	C
		PM	C	C	D
Jimmie Davis Bridge: Clyde Fant Parkway to CenturyLink Center Drive	WB	AM	F	F	F
		PM	E	E	F
	EB	AM	F	F	F
		PM	E	E	F
Jimmie Davis Highway: CenturyLink Center Drive to Sunflower Boulevard	WB	AM	B	C	C
		PM	A	A	B
	EB	AM	A	A	A
		PM	C	C	C
Jimmie Davis Highway: Sunflower Boulevard to Medical Drive	WB	AM	C	C	D
		PM	B	B	C
	EB	AM	C	C	D
		PM	F	F	F
Jimmie Davis Highway: Medical Drive to Barksdale Boulevard	WB	AM	E	E	F
		PM	A	A	A
	EB	AM	A	A	A
		PM	B	B	B

3.6.2 Build Alternatives

Bridge Build Alternatives 5 and 7:

Based on the *Traffic Study*, the bridge currently is operating at a Level-of-Service "F/E." As both Build Alternatives would increase the capacity of the LA 511 Jimmie Davis Bridge to four-lanes, the LOS of the bridge would be LOS "B/C" in 2036. Table 3-9 presents the Directional Peak Hour LOS for Bridge Build Alternatives 5 and 7 in 2016 and 2036 which are the same when constructed in conjunction with either Access Build Alternatives A or B.

Table 3-9. Directional Peak Hour LOS for Bridge Build Alternatives 5 and 7

Along LA 511			2016		2036	
			Alt A LOS	Alt B LOS	Alt A LOS	Alt B LOS
Alternative 7	WB	AM	C	C	D	D
		PM	B	B	B	B
	EB	AM	A	A	B	B
		PM	C	C	C	C
Alternative 5	WB	AM	C	C	D	D
		PM	B	B	B	B
	EB	AM	A	A	B	B
		PM	C	C	C	C

Source: ***Neel Schaffer Traffic Study***

Access Build Alternatives A, B, and C:

There are locations in the Access Alternatives where existing roadways will be abandoned or modified as follows proceeding west to east through the project area:

Access Alternative A: LA 511 would remain a five-lane highway east of CenturyLink Center Drive. Zach Avenue would be closed and access to the existing properties on the south side would be via Sunflower Boulevard. The CenturyLink Center Drive intersection becomes a right-in/right-out with the westbound slip ramp from LA 511 to the Arthur Ray Teague Parkway.

Access Alternative B: LA 511 would become a four-lane divided highway east of CenturyLink Center Drive. Directional access to and from LA 511 will be via J-Turns except at Sunflower Blvd., where westbound LA 511 will be allowed to make a direct left turn. Zach Avenue would be closed and access to the existing properties on the south side would be via Sunflower Boulevard. The CenturyLink Center Drive intersection becomes a right-in/right-out with the westbound slip ramp from LA 511 to the Arthur Ray Teague Parkway.

Access Alternative C: LA 511 east of CenturyLink Center Drive either would remain a five-lane highway under Alternative A or would become a four-lane divided highway with directional access to and from LA 511 via J-Turns except at Sunflower Boulevard where westbound LA 511 would be allowed to make a direct left turn under Alternative B. Zach Avenue would be closed and access to the existing properties on the south side would be via Sunflower Boulevard. CenturyLink Center Drive would become a cul-de-sac just north of LA 511, which allows the westbound ramp to move farther westward. Under this alternative, a new east/west roadway would be constructed between CenturyLink Center Boulevard and Medical Drive. This new roadway would be an extension of Reeves Marine Drive.

Table 3-10 presents the LA 511 Directional Peak Hour LOS for Access Build Alternatives A and B. Access Build Alternative C is intended to minimize the impact on existing land uses by maintaining existing driveways on the north side of LA 511 and can be constructed in conjunction with either Alternative A or Alternative B. Alternative C would have the same LOS as whichever of those alternatives would be constructed.

3.6.3 Safety

The records of incidents on the Jimmie Davis Bridge were reviewed in comparison to the statewide average for two-lane urban roadways. While some types of incidents, in some years, have exceeded the statewide average which is expressed as a percentage of the total incidents, there is no evidence that the bridge has serious safety concerns as the annual number of incidents is very low. Also, there is no evidence that would attribute these incidents to any specific cause.

3.6.4 Avoidance, Minimization, and Mitigation

The Needs for this project include the Relief of Traffic Congestion and Improved Safety. Therefore, no measures are required for avoidance, minimization, or mitigation of the effects to traffic.

Temporary effects to traffic during construction are discussed in Section 3.23 Construction Related Impacts.

Table 3-10. LA 511 Directional Peak Hour LOS for Access Build Alternatives A and B

Along LA 511			2016		2036	
			Alt A LOS	Alt B LOS	Alt A LOS	Alt B LOS
E. 70th Street: East Dixie Meadow Road to Clyde Fant Parkway	WB	AM	C	C	C	C
		PM	C	C	D	D
	EB	AM	B	B	C	C
		PM	C	C	D	D
Jimmie Davis Bridge: Clyde Fant Parkway to CenturyLink Center Drive	WB	AM	C	C	D	D
		PM	B	B	B	B
	EB	AM	A	A	B	B
		PM	C	C	C	C
Jimmie Davis Highway: CenturyLink Center Drive to Sunflower Boulevard	WB	AM	C	C	D	D
		PM	A	A	B	B
	EB	AM	A	A	A	A
		PM	B	B	C	C
Jimmie Davis Highway: Sunflower Boulevard to Medical Drive	WB	AM	B	C	C	D
		PM	A	A	B	B
	EB	AM	A	A	A	B
		PM	B	B	C	C
Jimmie Davis Highway: Medical Drive to Barksdale Boulevard	WB	AM	B	B	C	D
		PM	A	A	A	B
	EB	AM	A	A	A	B
		PM	B	B	C	C

3.7 Bicycle and Pedestrian Facilities

There are two existing bicycle and pedestrian facilities within the project area: The connection of these facilities across the Red River is identified in the Purpose and Need of the project.

Red River Bicycle Trail

The Red River Bicycle Trail is one of the recreational facilities provided by the City of Shreveport Department of Parks and Recreation (SPAR) within the greenspace of the Clyde Fant Parkway right-of-way on the west side of the river. Clyde Fant Parkway runs along the Red River from Airport Drive, north of downtown Shreveport, to LA 511 (East 70th Street on the west side of the river) in the project area. The Red River Bicycle Trail is aligned between the Clyde Fant Parkway and the Red River in Shreveport. It begins in downtown Shreveport and ends in the Charles and Marie Hamel Memorial Park, another SPAR facility, which is within the project area.

Arthur Ray Teague Jogging Trail

The Arthur Ray Teague Jogging Trail is one of the recreational amenities provided by the Red River Waterway Commission on separate parcels owned and maintained by the Commission within the greenspace of the Arthur Ray Teague Parkway right-of-way on the east side of the river. The Parkway extends south along the Red River from Diamond Jacks Boulevard, past the project area, to Sligo Road. The Arthur Ray Teague Jogging Trail is aligned between the Arthur Ray Teague Parkway and the Red River in the City of Bossier City. It begins just downriver of the Union Pacific railroad bridge and ends across the parkway from the CenturyLink Center, which is within the project area.

Trail Build Alternatives

Local and regional plans, as well as the Purpose and Need of this project, call for the connection of these two trails by a shared use trail crossing the Red River at LA 511, which is included in both Bridge Build Alternatives 5 and 7 with alternative alignments developed in Trail Build Alternatives 1 and 2. It would be ten feet wide with two foot shoulders on each side. For the elevated portion of the trail and the portion of the trail adjacent to the roadway on the bridge structure, the minimum surface width would be 14 feet. Both the barrier wall that would separate the trail from the adjacent travel lane on the bridge structure and the rail along the elevated portion would be located outside of the 14 foot width. The rail would be designed in a manner that would provide visibility to bicyclists and pedestrians as they traverse through curves.

The typical section of the trail at-grade would be a 10 foot wide hard-surfaced path with two-foot stabilized shoulders on each side. 4:1 fill slopes will be constructed adjacent to the parallel parkways and 3:1 fill slopes will be utilized on the river side of the multiuse path. In both Trail Alternatives, the trail would extend to connect with the existing trails as shown on Figure 3-4 Trail Alternative 1 and Figure 3-5 Trail Alternative 2. These figures both show the Trail Alternatives paired with Bridge Alternative 5. The same trail alignments would be paired with Bridge Alternative 7, but only one Bridge Alternative is shown in the interest of reducing the number of figures.

The at-grade portions of the trail would be aligned at a minimum of 44 feet from the centerline of the trail to the centerline of the adjacent two lanes of the two parkway roadways, which would exceed the required horizontal clearance between a shared use trail and a parallel roadway.

In order to minimize the footprint of the elevated portions of the Trail Alternative 1, retaining or modular walls would be used, where possible, rather than fill as they approach grade. The cross slope of the trail would be 1 percent. The vertical profile of the path will match the profile of the roadway when adjacent to travel lanes on bridge or ramp structures. As it descends to grade, the vertical slope of Trail Alternative 1 would vary from 3.2 percent to 4.5

percent and the vertical slope of Trail Alternative 2 would vary from 4.0 to 4.5 percent, which, in both cases, would be less than the 5 percent maximum.

For Trail Alternative 1 the result of maintaining a slope of 4.5 or less on the trail ramp from the bridge to the at-grade portion would be as follows:

- It would extend the length of the ramp on the east side to connect with the existing ground at a location where the existing ground is in a fairly consistent side slope and not in a steep drop toward the river;
- Again on the east, it would reduce the amount of fill that would be necessary to provide the vertical slope of the trail as it rises to the bridge height, thereby reducing floodway and environmental intrusions;
- It would allow the length of the elevated structure on the west side to generally match the length that is indicated for the east side to promote symmetry of design and to be aesthetically pleasing;
- It would provide a pedestrian friendly and ADA compliant ascent, especially for the disabled without requiring additional right-of-way; and
- Two segments on each elevated portion would have a 1 percent vertical slope, which are proposed as “rest spots” that would be located generally at the points of each ten feet change in elevation change, which would ease the ascent and provide breaks in the down grade slope to reduce speeds of descending bicycles.

For Trail Alternative 2, as it would reach grade adjacent to an exit ramp on the west and an entrance ramp on the east, the vertical grade is fixed by the roadway grade. However, much more of the trail would be at-grade, making the length of the descent much shorter, especially on the west side.

Pedestrian scale lighting would be installed along the at grade portions of the trail utilizing light poles approximately 15 feet in height spaced 60 to 80 feet apart to average maintained horizontal illumination levels in the range of 0.5 to 2 foot candles.

3.8 Community Facilities

There are four community facilities within the project area. These include, from west to east, Riverpark Church, CenturyLink Center, Cornerstone Hospital, and Barksdale Baptist Church as shown on Figure 3-6. Parks and recreation facilities, which also could be classified as community facilities, are discussed in Section 3.10.

3.8.1 No-Build Alternative

The No-Build Alternative would not affect the existing community facilities in the project area. Access to those facilities, however, would be affected by the increased levels of congestion that would result from the No-Build Alternative.

3.8.2 Build Alternatives

The Build Alternatives have no direct effects on the property or function of the community facilities. Some Build Alternatives, however, have effects on the access or egress from the facilities as described below:

Riverpark Church

Under Bridge Build Alternative 5, the median opening of LA 511 would be closed at the existing church driveway. Eastbound traffic on LA 511 would access the church by making a U-turn through the interchange with Clyde Fant

Figure 3-4. Existing Trails and Proposed Shared Use Trail Alternative 1

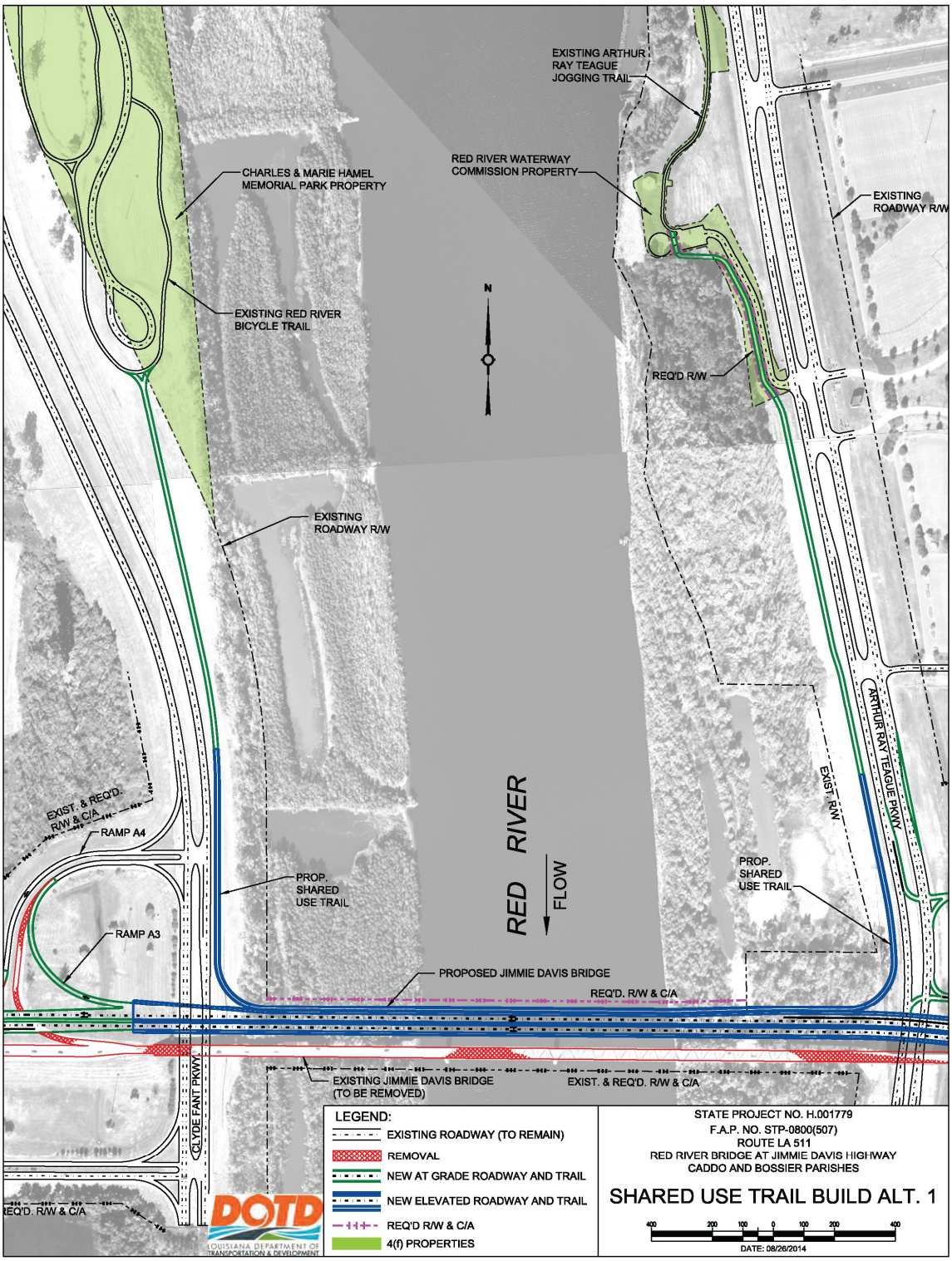

Figure 3-5. Existing Trails and Proposed Shared Use Trail Alternative 2

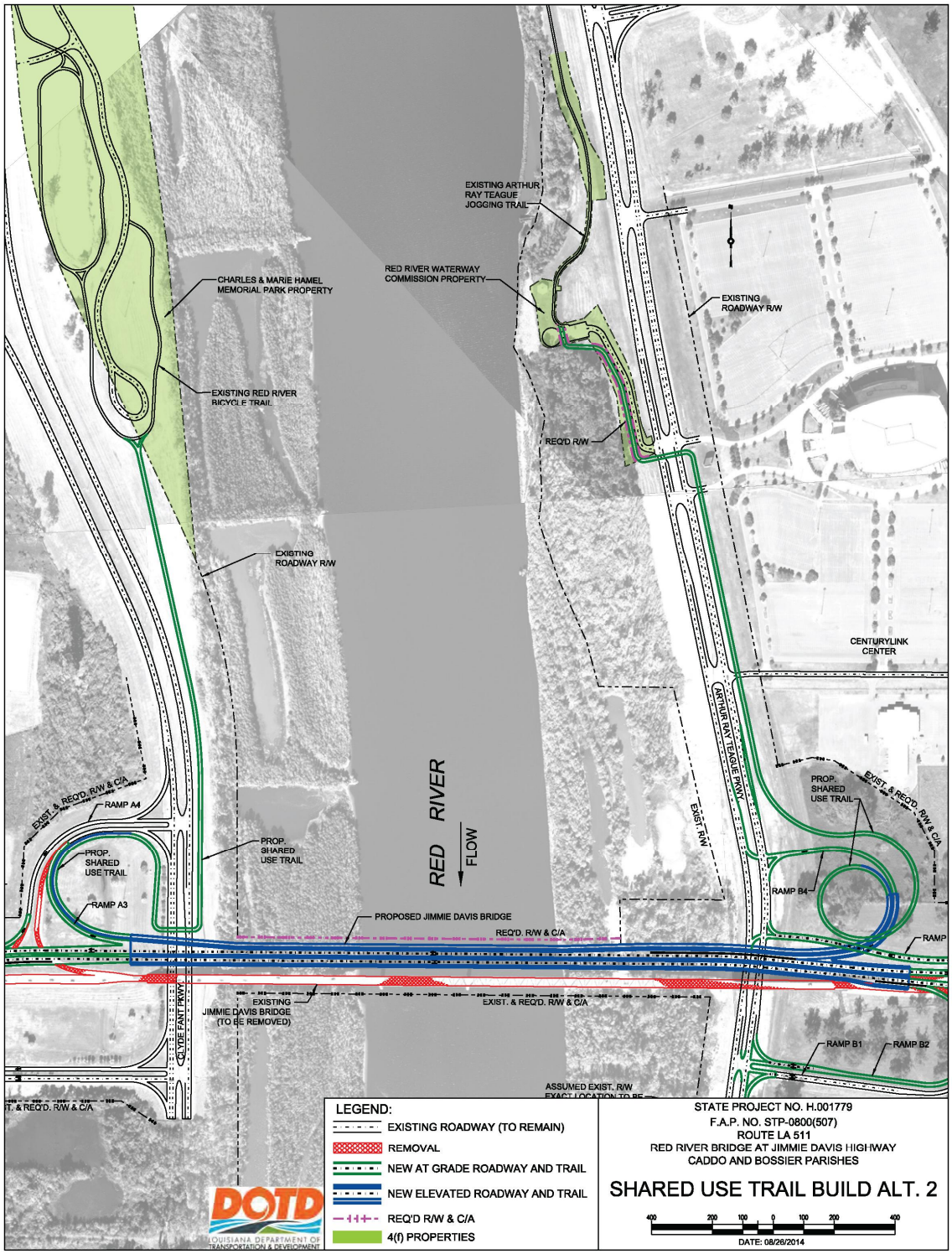

Parkway. All traffic exiting the church would turn right (westbound) because the existing median opening serving the driveway would be closed as a result of the need to narrow the LA 511 median in this area. The narrowing is required by the realignment of LA 511 to join the alignment of the 4-lane bridge. Exiting traffic wishing to travel eastbound on LA 511 would be required to travel westbound to a point where a U-turn would be possible.

Under Bridge Build Alternative 7, there would be no changes to the current access or egress for Riverpark Church. The Access Build Alternatives also would have no effect as they address traffic on the east side of the Red River.

CenturyLink Center

Access Build Alternatives A and B, if implemented without Alternative C, would affect the existing access and egress between the CenturyLink Center and Jimmie Davis Highway by replacing the intersection of CenturyLink Center Drive and Jimmie Davis Highway with a right-in/right-out intersection of CenturyLink Center Drive and the westbound exit ramp from LA 511 to the Arthur Ray Teague Parkway. This would eliminate the opportunity for eastbound LA 511 to turn into CenturyLink Center Drive and for vehicles to turn eastbound onto LA 511. These effects would be experienced primarily at non-peak hours when vehicles would exit CenturyLink Center after evening events. Access Build Alternative C would have a more pronounced effect on vehicles exiting CenturyLink Center as it creates a cul-de-sac at the southern terminus of CenturyLink Center Drive and removes the connection to the westbound exit ramp. In place of this connection it provides a direct connection via an extension of Reeves Marine Drive from the CenturyLink Center Drive to Medical Drive.

Cornerstone Hospital

Under Access Alternative B, eastbound LA 511 traffic would access Medical Drive to reach the hospital via a median U-turn located approximately 500 feet east of the existing intersection of LA 511 and Medical Drive. Traffic exiting the hospital wishing to travel eastbound on LA 511 would travel west on LA 511 and make a U-turn just prior to Sunflower Boulevard.

Barksdale Baptist Church

Under Access Alternative B, westbound LA 511 traffic would access the church by making a U-turn just prior to Sunflower Boulevard. Traffic exiting the church and wishing to travel westbound on LA 511 would travel east and make a U-turn just prior to US 71.

3.8.3 Avoidance, Minimization, and Mitigation

Riverpark Church

To minimize the inconvenience of having to travel westbound to a U-turn some distance from the church under Bridge Build Alternative 5, a U-turn will be provided at East Dixie Meadow Road. As the median in that location is not adequate to provide a turn lane, a small area of additional right-of-way will be acquired on the south side of LA 511 to facilitate the U-turn approximately 1,000 feet west of the exit driveway.

Figure 3-6. Community Facilities

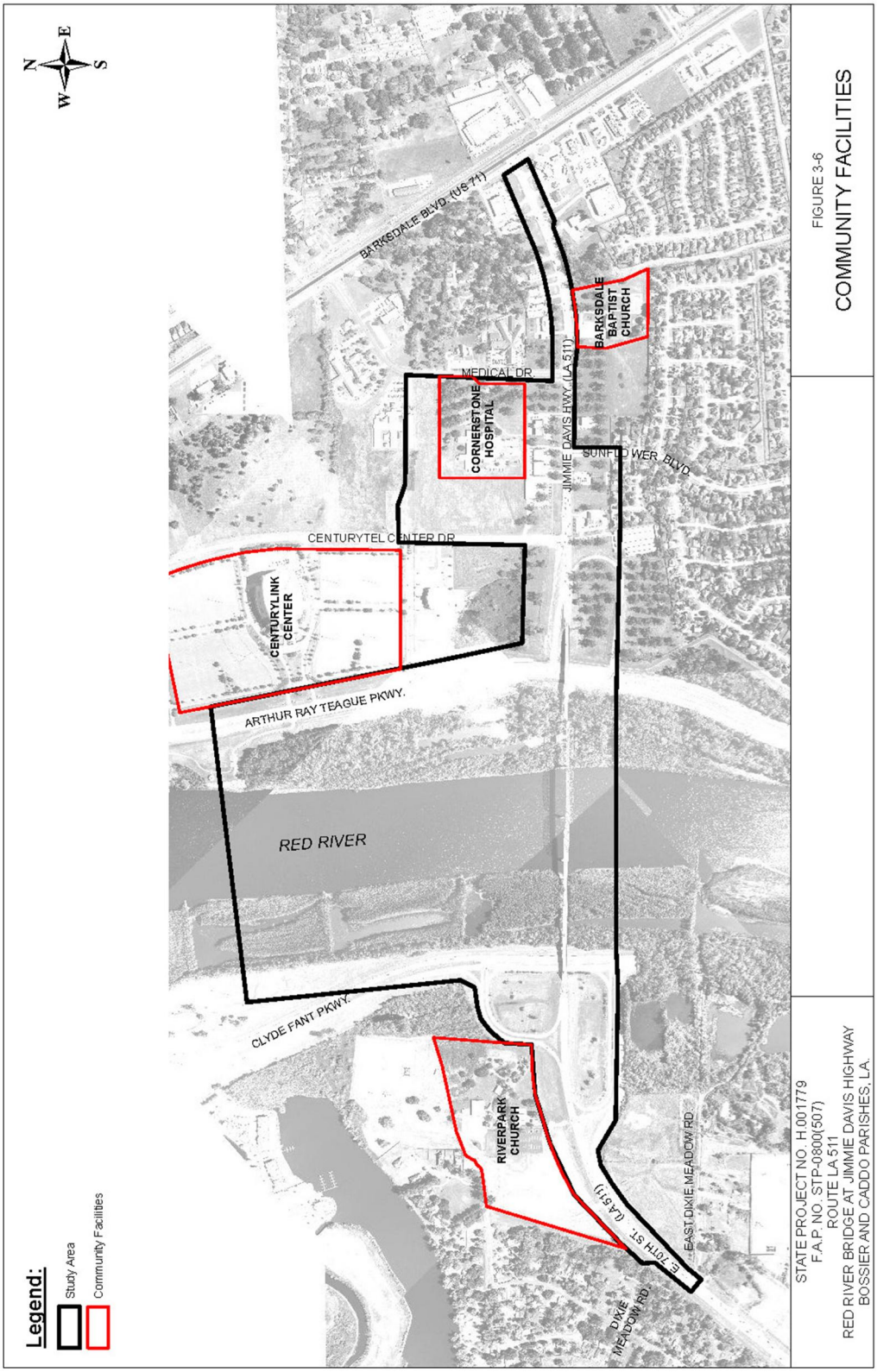

CenturyLink Center

The effects of Access Build Alternatives A and B, if implemented without Alternative C, will be avoided by the completion of the interchange of LA 511 and Arthur Ray Teague Parkway.

Cornerstone Hospital and Barksdale Baptist Church

The changes in access to these facilities are unavoidable results of the proposed access management changes under Alternative B. No minimization is required.

3.9 Cultural Resources

Investigations of cultural resources were considered wherever the Build Alternatives involve additional right-of-way or changes in roadway alignments. These cases include:

- The new westbound travel lanes along LA 511 north of the existing highway under Access Build Alternative B;
- The new and realigned ramps, the new shared use trails, and the new road connecting Sunflower Boulevard with the abandoned Zach Avenue under Bridge Build Alternatives 5 and 7; and
- The new road between CenturyLink Center Drive and Medical Drive under Access Build Alternative C.

Archaeology

It was determined that realigned ramps under Bridge Build Alternatives 5 and 7 in Caddo Parish and the shared use trail in Bossier Parish would not be included in the Phase I Archaeological Survey because they are located in areas disturbed by previous construction.

Field investigations included a pedestrian survey, ground surface inspection, and systematic subsurface testing. Eleven pedestrian transects were surveyed and 89 shovel/bucket auger tests were excavated along these transects. A total of 28.49 acres (11.53 hectares) of land was surveyed during field investigations. No prehistoric and/or historic cultural material was recovered during field investigations. The only material from the subsurface tests included plastic, Styrofoam, gravel, metal rebar fragments, and pieces of concrete. These items were noted when they occurred but were not collected for analysis and curation. Following subsequent consultation with the State Historic Preservation Officer (SHPO), they concurred in a letter, dated October 13, 2014, found in Appendix D, that no archaeological historic properties will be impacted by this project.

Standing Structures

With the exception of the existing Jimmie Davis Bridge, the standing structure survey confirmed the Stage 0 findings that there are no buildings approaching 50 years of age in the project area. A discussion of the bridge can be found in Chapter 5.0, Draft 4(f) Evaluation.

3.9.1 No-Build Alternative

One of the projects within the No-Build Alternative, LA 511: Jimmie Davis Bridge Rehabilitation, would impact a cultural resource in the study area as the existing Jimmie Davis Bridge was determined in 2013 to be eligible for the listing in the National Register of Historic Places under Criterion C, Design / Engineering in the *Louisiana Historic Bridge Inventory.* Section 106 Consultation and the procedures of the Programmatic Section 4(f) Evaluation and Approval for FHWA

Projects that Necessitate the Use of Historic Bridges[1] are understood to be procedures to be undertaken through the implementation of that project.

3.9.2 Build Alternatives

Based upon the field investigations discussed above, the Build Alternatives would not affect any cultural resources except the existing Jimmie Davis Bridge. Under Bridge Build Alternative 5, the existing bridge would be demolished. In subsequent consultation with the SHPO, they concurred in the letter dated October 13, 2014, found in Appendix D, that this would constitute an adverse effect as defined by Section 106 Regulations (36 CFR 8000).

3.9.3 Avoidance, Minimization, and Mitigation

If Alternative 5 is selected, further consultation with the SHPO is required in order to begin the Memorandum of Agreement process for the existing bridge. This also will satisfy the obligation under Section 4(f) of the US Department of Transportation Act.

Alternative 7 would benefit from the current rehabilitation of the existing bridge under the No-Build Alternative. Section 106 and Section 4(f) procedures relative to the existing bridge would be resolved through the implementation of the rehabilitation project.

3.10 Parks and Recreational Facilities

The parks and recreational facilities within the project area are presented in Table 3-11 and shown on Figure 3-4 and Figure 3-5.

3.10.1 No-Build Alternative

The No-Build alternative would not affect the parks and recreational facilities within the project area.

[1] A programmatic Section 4(f) approval that there are no feasible and prudent alternatives to the use of certain historic bridge structures to be replaced or rehabilitated with Federal funds and that the projects include all possible planning to minimize harm resulting from such use pursuant to Section 4(f) of the Department of Transportation Act of 1966, 49 U.S.C. 303, and Section 18(a) of the Federal-Aid Highway Act of 1968 23 U.S.C. 138.

The historic bridges covered by this programmatic Section 4(f) evaluation are unique because they are historic, yet also part of either a Federal-aid highway system or a state or local highway system that has continued to evolve over the years. Even though these structures are on or eligible for inclusion on the National Register of Historic Places, they must perform as an integral part of a modern transportation system. When they do not or cannot, they must be rehabilitated or replaced in order to assure public safety while maintaining system continuity and integrity. For the purpose of this programmatic Section 4(f) evaluation, a proposed action will "use" a bridge that is on or eligible for inclusion on the National Register of Historic Places when the action will impair the historic integrity of the bridge either by rehabilitation or demolition. Rehabilitation that does not impair the historic integrity of the bridge as determined by procedures implementing the national Historic Preservation Act of 1966, as amended (FHWA), is not subject to Section 4(f). for additional information, see http://www.environment.fhwa.dot.gov/4f/4fbridge.asp

Table 3-11 Parks and Recreational Facilities within the Project Area

Property Name	Property Classification	Location	Official(s) with Jurisdiction	Function/ Amenities
Red River Waterway Commission Recreational Facilities (Arthur Ray Teague Jogging Trail)	Trail	Eastbank of Red River	Red River Waterway Commission	Trail, gazebo, picnic area, benches, boat launch
Red River Bicycle Trail	Trail	Westbank of Red River	City of Shreveport Department of Parks and Recreation (SPAR)	Trail
Charles and Marie Hamel Memorial Park	Park	Clyde Fant Parkway and Island Park Boulevard	Shreveport Department of Parks and Recreation (SPAR)	Picnic area

3.10.2 Build Alternatives

Bridge Build Alternatives 5 and 7 would provide a connection via the proposed shared use trail between the Arthur Ray Teague Jogging Trail and the Red River Bicycle Trail in support of the project Purpose and Need and local plans. These alternatives would require the permanent use of 0.34 acres of the property maintained for recreational purposes by the Red River Waterway Commission on the east side of the river and 0.01 acres of the Charles and Marie Hamel Memorial Park on the west side of the river. The remainder of the extent of the shared use trail would be constructed in the rights-of-way of LA 511, the Clyde Fant Parkway, and the Arthur Ray Teague Parkway and would have no effects on the parks and recreational facilities in the project area. Chapter 5.0 Draft 4(f) Evaluation provides additional information regarding the use of these areas within parks and recreational facilities.

The Access Build Alternatives would have no effect on parks and recreational facilities.

3.10.3 Avoidance, Minimization, and Mitigation

No measures are required for avoidance minimization, or mitigation.

3.11 Aesthetics

Aesthetics is concerned with visual resources and the human value placed on the environment. Visually sensitive receptors include residences, parks, natural areas, historic resources, and public facilities. These are places people utilize, and they are contextual visual environments in which the setting is important. Viewer sensitivity to visual resources is highly subjective. People tend to become acclimated to existing visual conditions and place a subjective value on those conditions.

The existing visual characteristics of the project area west of CenturyLink Center Drive are primarily of open space and views of the Red River while the visual characteristics of the project area east of CenturyLink Center Drive are typical of a suburban roadway corridor with mixed commercial, office, and institutional uses and areas of vacant land. The most notable visual landmark in the project area is the existing Jimmie Davis Bridge, which is typical of truss bridges of the mid-20th century. The perception of the bridge varies within the community with some expressing a wish to maintain what is familiar while others express the view that it symbolizes traffic congestion.

3.11.1 No-Build Alternative

The No-Build Alternative would have no impact on existing views and aesthetic characteristics of the project corridor.

3.11.2 Build Alternative

East 70th Street (LA 511 on the west side of the Red River)

On the west side of the Red River, neither Bridge Build Alternative would affect the aesthetic characteristics of the project area.

Bridge Crossing

The new bridge would affect the aesthetics of the river crossing. Under Build Alternative 5, the existing bridge would be removed and the crossing would have a unified appearance that would not distract from the contemporary design of structures visible from the approaches along LA 511. Under Build Alternative 7, the existing bridge would remain, and a new westbound bridge without a superstructure would be added to the viewscape. This viewscape would be less unified visually, but would display the passage of time and the evolution of construction methods, which some would find to be an interesting visual element.

Jimmie Davis Highway (LA 511 on the east side of the Red River)

Under Access Alternative A, there would be no effect on the aesthetics of the area east of CenturyLink Center Drive. Under Access Alternative B, the construction of a boulevard would add a wide grass median to the viewshed. This median also would allow for a pedestrian refuge that would reduce conflicts between pedestrians and vehicular traffic. Under Access Alternative C, the effect on the visual environment would be determined by whether it is combined with Alternative A or Alternative B.

3.11.3 Avoidance, Minimization and Mitigation

Under Bridge Build Alternatives 5 and 7, context sensitive design elements will be examined during final design to make the new structure aesthetically pleasing and compatible with the existing viewshed across the Red River.

3.12 Wetlands

3.12.1 Wetlands and Other Waters of the U.S.

Section 404 of the *Clean Water Act of 1977* (CWA), as amended, authorizes the Secretary of the Army, acting through the Chief of Engineers, to issue permits for the discharge of dredged or fill material into waters of the United States, including wetlands. Federal wetland regulation 33 CFR 328, defines the waters of the United States as those waters used in interstate or foreign commerce, subject to the ebb and flow of the tide, and all interstate waters including interstate wetlands. The regulation further defines waters of the United States as all other waters such as intrastate lakes, rivers, streams, mudflats, sand flats, wetlands, sloughs, prairie potholes, wet meadows, playa lakes, natural ponds, or impoundments of waters, tributaries of waters, and territorial seas.

Wetlands are those areas inundated or saturated by surface or groundwater at a frequency and duration sufficient to support, and under normal circumstances

do support, a prevalence of vegetation typically adapted for life in saturated soil conditions (Environmental Laboratory 1987). Jurisdictional boundaries for these water resources are defined in the field as the ordinary high water mark which is that line on the shore established by the fluctuations of water and indicated by physical characteristics such as clear, natural lines impressed on the bank, shelving, changes in the character of soil, destruction of terrestrial vegetation, the presence of litter and debris, or other appropriate means that consider the characteristics of the surrounding areas (Environmental Laboratory 1987).

A routine delineation with on-site inspections was conducted between July 8, 2013 and July 12, 2013. The most current design plans were utilized to determine the limits for the wetland delineation. Current aerial photographs, U.S. Geological Survey (USGS) topographic maps, and National Wetland Inventory (NWI) maps were studied before and during the survey in order to help identify potential wetlands and other waters of the U.S.

The proposed study area was delineated using the 1987 Wetland Delineation Manual (Environmental Laboratory 1987) and the Atlantic and Gulf Coastal Plain Region Regional Supplement (U.S. Army Corps of Engineers [USACE] 2010). The limits of the potential wetlands and waters of the U.S. were mapped using a global positioning system (GPS) unit and the data was input into a geographic information system (GIS) program for analysis. Figure 3-7 presents the wetlands of the study area.

Plant communities and dominant plant species were identified to determine the presence of hydrophytic vegetation. The *National Wetland Plant List* (USACE 2013) was used to determine the indicator status of dominant plant species. Soils information was obtained from the U.S. Department of Agriculture (USDA) web soil survey (USDA 2013). Soil profiles were examined to determine if hydric soil indicators were present. Wetland hydrology was determined by on-site visual observation of geomorphic and hydrologic conditions. Additionally, soil pits were dug to a minimum depth of 20 inches to determine if hydrology indicators were present.

A separate technical report titled *Wetland Findings Report, Red River Bridge at Jimmie Davis Highway, Route LA 511, Bossier and Caddo Parishes* was prepared as a supplement to this document.

3.12.2 No-Build Alternative: Wetlands and Other Waters of the U.S.

The No-Build Alternative would have no effects on wetlands and/or waters of the U.S.

3.12.3 Build Alternatives: Wetlands and Other Waters of the U.S.

Minor, long-term adverse impacts to wetlands and waters of the U.S. would be expected from implementation of Alternative 5 and Alternative 7. A summary of the impacts within each alternative alignment is listed in Table 3-12. Of the Access Build Alternatives, both require additional right-of-way for the new roadway that provides access to parcels on the south side of LA 511. Otherwise, Alternative A is entirely within the existing right-of-way of LA 511; Alternative B also is primarily within the existing right-of-way but requires a minor sliver of additional required right-of-way at the northwest corner of LA 511 and US 71; and Alternative C is on new right-of-way; however, Alternatives A, B and C have no effects on wetlands or waters of the US.

Table 3-12. Potential Impacts to Wetlands and Waters of the US of Additional Required Right-of-Way by Bridge and Trail Build Alternatives

Action	Jurisdictional Wetlands	Waters of the U.S.
Alternatives 5 and 1	2.65 acres	1.81 acres
Alternatives 5 and 2	2.65 acres	1.81 acres
Alternatives 7 and 1	1.66 acres	1.04 acres
Alternatives 7 and 2	1.66 acres	1.04 acres

3.12.4 Wetland Reserve Program

The Natural Resources Conservation Service (NRCS) has developed a number of programs and policies to protect and preserve agricultural lands. The Wetlands Reserve Program (WRP) supports landowners who wish to protect, restore, and enhance wetlands on their property. Any federal undertaking must consider impacts to lands enrolled in the WRP.

3.12.5 No-Build Alternative, Wetlands Reserve Program

The No-Build Alternative would have no effect on WRP lands.

3.12.6 Build Alternatives, Wetlands Reserve Program

Consultation with the NRCS was initiated via letter dated August 23, 2013. A response letter dated September 5, 2013 was received from the NRCS stating, “The project map submitted with your request indicates that the proposed construction areas will not impact prime farmland and therefore is exempt from the rules and regulations of the Farmland Protection Policy Act (FPPA)-Subtitle I of Title XV, Section 1539-1549. Furthermore, we do not predict impacts to NRCS work in the vicinity”. The referenced NRCS work in the vicinity includes Wetlands Reserve Properties. A copy of this letter is included in Appendix B. Therefore, no impacts to WRP lands are anticipated from any of the Build Alternatives because none exist within the proposed study area.

3.12.7 Avoidance, Minimization, and Mitigation

The permits and mitigation requirements for the proposed project are discussed in Section 3.25 Permits. Bridge Build Alternatives 5 and 7 will require Section 404 and Section 10 permits from USACE. These permits must be obtained in coordination with a Section 9 permit from the USCG.

3.13 Surface Water Resources

The proposed study area is within the Red River Basin. The Red River has its origin in eastern New Mexico and flows across portions of Texas, Oklahoma, and Arkansas before entering northwestern Louisiana. The river flows south to Shreveport, where it turns southeast and flows for approximately 160 miles to its junction with the Atchafalaya River. From the Arkansas state line to Alexandria, the Red River is contained within high bank levees, which range from 20 to 35 feet above low water level. Below Alexandria, the river flows through a flat alluvial plain, which is subject to backwater flooding during periods of high water. The Red River drains approximately 7,760 square miles within Louisiana.

Figure 3-7. Wetlands and Waters of the US

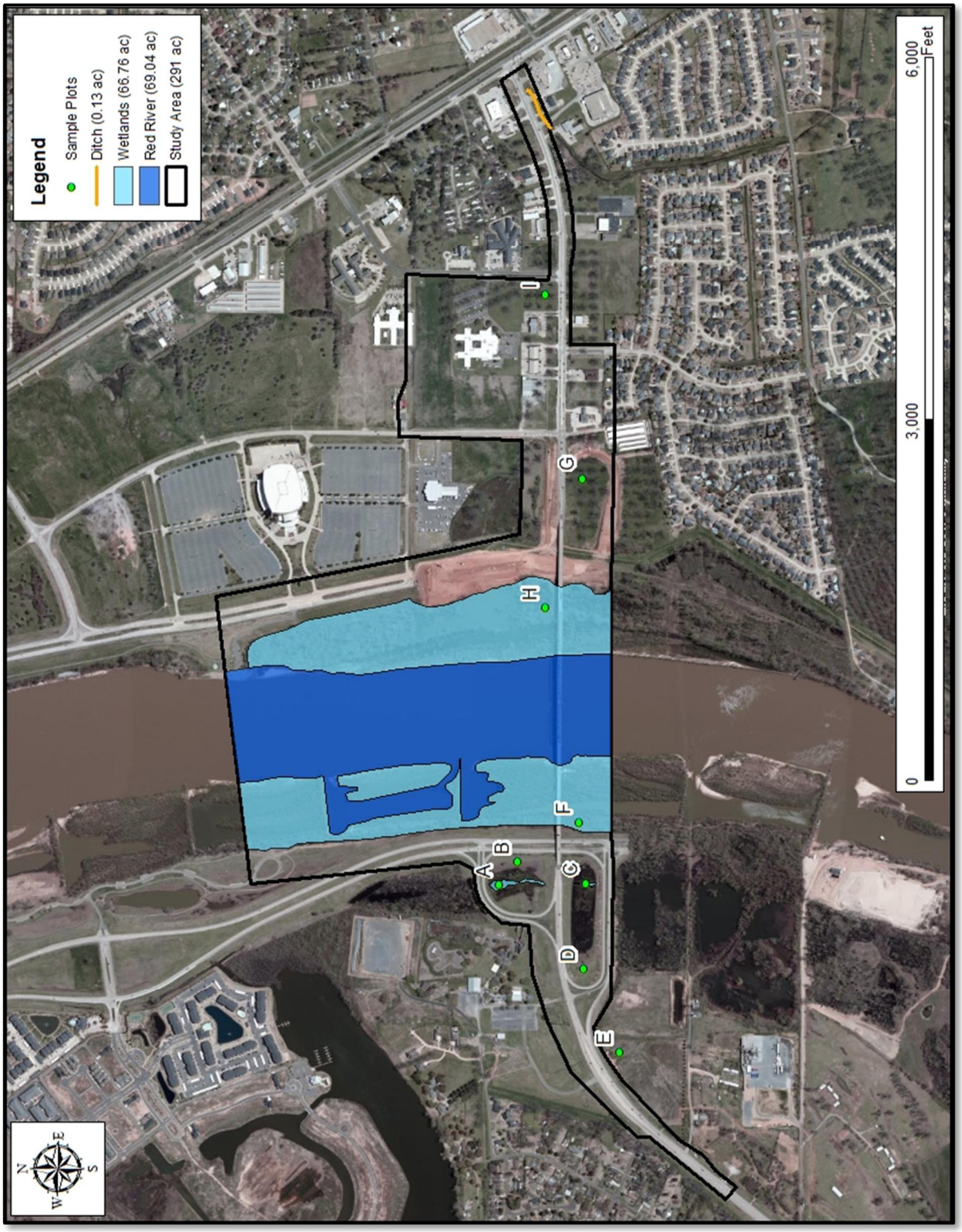

Within the study area, west of the Red River, storm water is directed directly to the Red River floodplain. East of the Red River storm water generally flows south and east through local drainage. At Station 100+00, LA 511 approaches the headwaters of Mack's Bayou, and a portion of the roadway right-of-way is located within the 100-year floodplain. At Station 100+00, LA 511 approaches the headwaters of Mack's Bayou, and a portion of the existing LA 511 right-of-way is located within the 100-year floodplain, but no work relative to Access Build Alternatives A or B would affect the floodplain.

3.13.1 Water Quality

The Louisiana Department of Environmental Quality (LDEQ) performs water quality assessments to meet the requirements of the CWA Section 303(d) and 305(b). Section 303(d) requires the state to list impaired water bodies and to develop a total maximum daily load (TMDL) for those water bodies. Section 305(b) requires the states to provide the following data:

- A description of the water quality of all navigable waters in the State
- An assessment of the status of waters of the State with regard to their support of recreational activities and fish and wildlife propagation
- An assessment of the State's water pollution control activities toward achieving the CWA goal of having water bodies that support recreational activities and fish and wildlife propagation
- An estimate of the costs and benefits of implementing the CWA
- A description of the nature and extent of nonpoint sources of pollution and recommendations for programs to address nonpoint source pollution

Those data are then reported to the U.S. Environmental Protection Agency (USEPA) every two years (even years) as part of the Louisiana Water Quality Inventory: Integrated Report (IR). The Final 2012 IR was approved with three sub-segment revisions by USEPA on July 18, 2013. The data presented in Table 3-13 refers to that presented as part of the 2012 IR (data collected from October 2009 through September 2011). According to the 2012 IR, the Red River within the study area fully supports all its designated uses (LDEQ 2012). The Red River is not listed on Louisiana's 2012 Section 303(d) list of impaired water bodies (LDEQ 2012).

The only other water body within the proposed study area is Mack's Bayou. Mack's Bayou is not listed on Louisiana's 2012 Section 303(d) list of impaired water bodies (LDEQ 2012).

3.13.2 No-Build Alternative, Water Quality

The No-Build Alternative would result in minor, long-term, adverse impacts to water quality. Potential water quality impacts from the No-Build Alternative would be limited to operating (bridge runoff) and maintaining the existing bridge.

Table 3-13. Water Quality Attainment—Red River (From Arkansas state line to US-165 in Alexandria)

Designated Use	Definition	Status
Primary Contact Recreation	Any recreational activity which involves or requires prolonged body contact with the water, such as swimming, water skiing, tubing, snorkeling, and skin-diving.	Fully supporting
Secondary Contact Recreation	Any recreational activity which may involve incidental or accidental body contact with the water and during which the probability of ingesting appreciable quantities of water is minimal, such as fishing, wading, and recreational boating.	Fully supporting
Fish and Wildlife Propagation	The use of water for preservation and reproduction of aquatic biota such as indigenous species of fish and invertebrates, as well as reptiles, amphibians, and other wildlife associated with the aquatic environment. This use also includes the maintenance of water quality at a level that prevents contamination of aquatic biota consumed by humans.	Fully supporting
Drinking Water Supply	A surface or underground raw water source which, after conventional treatment, will provide safe, clear, potable and aesthetically pleasing water for uses which include but are not limited to, human consumption, food processing and cooking, and as a liquid ingredient in foods and beverages.	Fully supporting
Agriculture	The use of water for crop spraying, irrigation, livestock watering, poultry operations and other farm purposes not related to human consumption.	Fully supporting

3.13.3 Build Alternatives, Water Quality

The Red River, Mack's Bayou, and wetlands are the water resources in the study area that could experience water quality impacts. The Build Alternatives' potential impacts to water quality would be associated with constructing, operating, and maintaining a new bridge over the Red River and associated roadway construction.

Bridge construction at the river's edge makes it possible for soil to erode into the Red River. Over time, increased amounts of soil entering the river can damage the river ecosystem by lowering oxygen levels and covering food sources and fish spawning areas. Soil and rock washed away around bridge piers can change the river bottom, affecting those species that use the bottom for food or habitat. Because construction projects disturb large areas of land, thus increasing the possibility of erosion, they have potential to cause environmental harm. The CWA requires construction sites to put controls in place to prevent pollution from being discharged with storm water into nearby waterways. Without on-site pollution controls, sediment-laden runoff from construction sites could flow directly to the nearest waterway and possibly degrade water quality. In addition, storm water could pick up other pollutants such as concrete washout, paint, used oil, pesticides, solvents, or other debris and the polluted runoff could harm or kill fish and wildlife, degrade aquatic habitat, and affect drinking water quality.

According to the 2012 IR, the Red River within the study area fully supports all its designated uses (LDEQ 2012), and neither the Red River nor Mack's Bayou are listed on Louisiana's 2012 Section 303(d) list of impaired water bodies (LDEQ 2012). Although these water bodies are not impaired, special consideration should still be used during construction phases in order to minimize the potential of impairment.

The LDEQ regulates the control of runoff from land disturbance and issues a permit for the work to DOTD, although the contractor is responsible for complying with the permit conditions. To protect water quality and reduce impacts during and after construction, DOTD will comply with LDEQ's storm water regulations, which are intended to prevent soil from leaving the construction site. These regulations require erosion control measures to be put in place when land clearing begins at the proposed project site. In accordance with the National Pollutant Discharge Elimination System (NPDES) requirements of the CWA, DOTD operates under the provisions of the Louisiana Pollutant Discharge Elimination System (LPDES) Storm Water General Permits. This permit requires using erosion control measures and limits the amount of pollutants that can leave a job site.

DOTD has developed specific policies for controlling erosion and sediment on job sites. The development of guidelines to address storm water runoff and consequential erosion problems is required as part of Louisiana's overall Storm Water Management Program. Requirements include project specific plans for controlling erosion and sediment loss for which a LPDES Storm Water General Permits is required.

Construction of the proposed project would require the development and implementation of an erosion and sediment control plan (DOTD 2007). The erosion and sediment control plan would detail the risk of erosion in different parts of the proposed study area and would specify BMPs to be used prior to construction activities and periodic maintenance and inspection procedures during construction. The plan would be designed to reduce suspended solids, turbidity, and downstream sedimentation that may degrade water quality and adversely impact aquatic life. The plan provides for temporary erosion and sediment control measures that will be included within construction contract specifications. The erosion and sediment control plan must be submitted and approved by DOTD prior to the commencement of any construction activity.

Project construction would strive to avoid adverse impacts to water quality by prohibiting construction activities in existing waterways except where bridge and culvert construction necessitates such activity. BMPs would be utilized to minimize the area of disturbance. Erosion and sediment controls may include a combination of ditch checks, silt fence, berms, sediment basins, temporary and permanent seeding, slope drains, etc. All protective practices would be consistent with the LADOTD's soil erosion control procedures (DOTD 2007).

Preventing water quality impacts on a major bridge project presents some slightly different challenges than a road construction project. Although erosion control during construction of the roadway approaches is important, special attention must be given to work in the river itself. Any project that involves discharge into navigable waters of the U.S. requires a Water Quality Certification from LDEQ that is linked to the USACE issuance of a CWA 404 permit. This project will require obtaining a water quality certification to ensure that the proposed activity does not exceed state water quality standards. All construction activities will comply with the existing rules and regulations of governmental agencies having jurisdiction over streams and water supplies in the area.

Operating and maintaining a highway can adversely affect water quality, vegetation, and associated aquatic life if storm water runoff washes chemical

pollutants from the roadway surface to the river during normal roadway operation. These pollutants come from motor vehicles as well as roadway chemicals (*i.e*., herbicides and deicing salts). Pollutants from vehicles can include grease and petroleum from lubricant spills or leaks, antifreeze and hydraulic fluid, and zinc, which is used in tires and motor oil.

The water quality effects from such pollutants would be greatest at locations where storm water runoff directly enters waterways. Generally the amount of pollutants would be low volume and would have only a localized impact, at most. Based on the amount of traffic traveling over the Jimmie Davis Bridge daily, it is not anticipated that pollutants in highway runoff would be present in amounts high enough to harm water quality. DOTD will design ditches and storm water runoff areas so that storm water or road surface pollutants that run off the highway have limited effects on water quality.

3.13.4 Scenic Streams

In 1970, the Louisiana Legislature created the Louisiana Natural and Scenic Rivers System, a protection initiative to limit impacts to certain Louisiana rivers, streams, and bayous. Louisiana's scenic streams are regulated under the *Louisiana Scenic Rivers Act of 1988,* which established procedures and provided a mechanism whereby the Louisiana Department of Wildlife and Fisheries (LDWF) can preserve, protect, develop, reclaim and enhance the wilderness qualities, scenic beauties, and ecological regime of rivers and streams or segments thereof included within the Louisiana Natural and Scenic Rivers and Historic and Scenic Rivers System. Under the Act, LDWF also can further the purposes of preserving aesthetic, scenic, recreational, fish, wildlife, ecological, archaeological, geological, botanical and other natural and physical features and resources associated with the streams in the system.

There are currently 66 designated scenic rivers within the State of Louisiana, none of which are located within or adjacent to the proposed study area. Neither the Red River nor Mack's Bayou are included on the List of Natural and Scenic Rivers or the List of Historic and Scenic Rivers of the *Louisiana Scenic Rivers Act* (RS 56:1856).

3.13.5 No-Build Alternative, Scenic Streams

The No-Build Alternative would have no impact on the Louisiana Natural and Scenic Rivers System.

3.13.6 Build Alternatives, Scenic Streams

Consultation with the LDWF was initiated in a Solicitation of Views (SOV) letter dated June 17, 2013. A response letter was received from LDWF dated August 8, 2013 stating, "*No state or federal parks, wildlife refuges, scenic streams, or wildlife management areas are known at the specified site within Louisiana's boundaries*." A copy of this letter is included in Appendix B.

The Build Alternatives would have no effects on the Louisiana Natural and Scenic Rivers System as no designated scenic streams exist near the proposed study area.

3.13.7 Avoidance, Minimization, and Mitigation

No measures are required for avoidance, minimization, or mitigation.

3.14 100-Year Floodplains

As shown in Figure 3-8, LA 511 is routed through the 100-year floodplain for approximately 0.75 miles. A substantial portion of this length is the bridge segment of the highway. The remainder consists of the existing LA 511 right-of-way and roadway on the west side of the Red River.

3.14.1 No-Build Alternative

The No-Build Alternative would result in no impact to the100-year floodplains.

3.14.2 Build Alternatives

Both of the Bridge Build Alternatives locate support piers for the new bridge structure and the elevated portions of the trail within the Red River floodplain and some segments of at-grade roadway would be realigned within the floodplain on the west side of the river. Bridge Build Alternative 5 would affect an estimated 7.43 acres of the 100-year floodplain and Bridge Build Alternative 7 would affect 4.83 acres. The at-grade portion of Trail Alternative 1 would affect 1.6 acres of the 100-year floodplain while the at-grade portion of Trail Alternative 2 would affect 2.37 acres.

In Bossier Parish, no improvements for the Access Build Alternatives are located within the 100-year floodplain of the Red River as these improvements are located east of the protection levee, and the floodplain of Mack's Bayou is outside of the footprint of the proposed improvements.

3.14.3 Avoidance, Minimization, and Mitigation

Mitigation of the effects of the project in the 100-year floodplain will be accomplished through the permit process explained in Section 3.25.

3.15 Groundwater Resources

In response to the Solicitation of Views, the Environmental Protection Agency indicated in correspondence dated June 24, 2013 that the project does not lie within the boundaries of a sole source aquifer.

A separate technical report titled *Phase 1 Environmental Site Assessment, Red River Bridge at Jimmie Davis Highway, Route LA 511, Bossier and Caddo Parishes* was prepared in support of this project. The Phase 1 report documented the location of groundwater wells in proximity to the project corridor.

Information regarding water well locations within a 1.0 mile search distance of the project corridor was provided by *EDR Data Map™ Well Search Report 3694145.2w (Appendix B*), dated August 13, 2013, utilizing the following sources: Public Water Systems (USEPA Office of Drinking Water Federal Reporting System); USGS National Water Inventory System; Louisiana Public Water supply Wells (Office of Public Health); Water Well Registration Data File (Louisiana Department of Transportation and Development).

Twenty-seven registered water wells were listed in the federal water well databases reviewed, and ninety-two registered water wells were listed in the State of Louisiana water well databases reviewed. Water well locations are depicted in the *EDR Data Map™ Well Search Report 3694145.2w (Appendix B*).

Figure 3-8. 100-Year Flood Plains Map

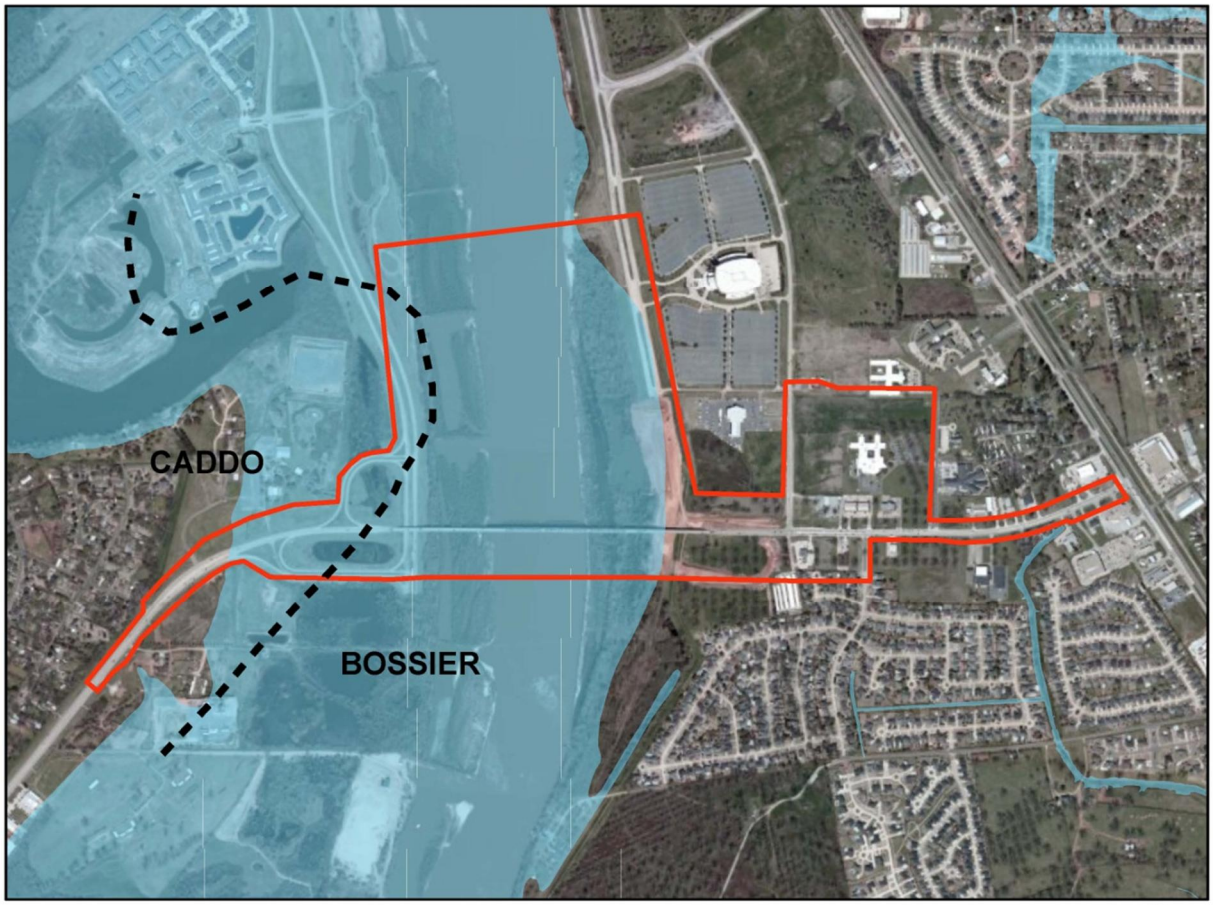

100-Year Flood Plains

RED RIVER BRIDGE AT JIMMIE DAVIS HIGHWAY
ROUTE LA 511
BOSSIER AND CADDO PARISHES

STATE PROJECT NO. H.001779; PO NO. 2-30933
F.A.P. NO. STP-0800(507)

0 0.3 0.6 Miles

Legend

- Parish Boundary
- Project Study Area
- 100-Year Flood Plains

Source: Bossier Parish - FEMA Flood Insurance Rating Map, Bossier Parish, 483 of 675, Revised March 19, 3013; Caddo Parish - GIS files provided by Northwest Louisiana Council of Governments, January 9, 2014

The only water wells that are adjacent to the project corridor are at the following locations:

- Former Diamond Shamrock #380 (now Valero at Appendix B Map ID # 7) at 4910 Barksdale Boulevard, southwest corner of the intersection of Route LA 511 and Barksdale Boulevard, where there are two registered groundwater monitor wells.
- Former 7-Eleven, Circle K #8177, now CVS at 4890 Barksdale Boulevard (Appendix B Map ID # 5), at the northwest corner of the intersection of Route LA 511 and Barksdale Boulevard (former address was 4904 Barksdale Boulevard) where there are thirteen registered groundwater monitor wells and seven registered groundwater recovery wells. LDEQ file data indicate that all monitor and recovery wells have been properly plugged and abandoned.
- Latitude 32.4586 North, longitude -93.6891 west, where a USGS observation well (now destroyed) was located.

3.15.1 No-Build Alternative

The No-Build Alternative would have no effect on groundwater resources.

3.15.2 Build Alternatives

Access Build Alternative B has the potential to affect the existing well sites as described above.

3.15.3 Avoidance, Minimization, and Mitigation

Additional investigation of the potential effects to the existing ground water wells will be undertaken during final design. Avoidance, minimization, or mitigation measures will be developed if potential impacts are identified at that time.

3.16 Topography, Geology, and Soils

Bossier and Caddo Parishes are in the upper part of the Gulf Coastal Plain. The relief is nearly level to strongly sloping. The Red River forms a boundary between the parishes. There are three major topographic divisions in Bossier Parish; the alluvial valley of the Red River, the Tertiary uplands, and the broad stream terraces that are locally known as flatwoods (USDA 1962). Figure 3-9 presents the Soils Map of the study area.

The soils in Caddo Parish have formed in parent material deposited during three or more different geologic time periods. Caddo Parish has three physiographic regions. Each region is characterized by soils formed in a different kind of age of parent materials. The Red River alluvial plain forms a north-south band along the eastern edge of the parish. The Pleistocene terraces of the Red River adjoin the major lakes and flank the lower-lying Red River alluvial plain. These terraces are large, gently sloping to level, and about 160 to 220 feet in elevation. The gently sloping to hilly uplands of the Tertiary Period comprise the remainder of Caddo Parish (USDA 1980).

A strong influence on the pattern of drainage and deposition was exerted by the Red River raft, a great logjam that for about 175 years chocked the channel of the river. The cause of the logjam and the date of its origin are obscure. In 1833, the raft extended in an intermittent pattern from about the southern boundary of Bossier Parish to about 2 miles north of Shreveport. At one time, it extended from near the Arkansas line to below Campti, Louisiana, a distance of more than 160 miles. The entire river bordering Caddo and Bossier Parishes was affected. While the main channel of the river was blocked, natural levees formed along the outlet bayous. Old natural levees were flooded. The damming of tributaries formed large lakes, which were destroyed by the removal of the raft. All of this influenced the pattern and

nature of the alluvial sediments in which the bottomland soils formed. Deposition of alluvium has been minor and localized since the outlets were closed by levees constructed after the removal of the raft (USDA 1962).

The Red River bottomland soils and the soils formed in local stream alluvium are on a surface that has been in place for only a short period of geologic time. Even now some areas receive fresh sediments frequently. However, the building of man-made levees for flood protection has severely reduced the addition of fresh sediments to most of the Red River bottomland soils (USDA 1962).

Based on USDA maps, there are four soil types found within the proposed study area (USDA 2013). These include Severn very fine sandy loam (SnA and SkB), Severn silt loam (SgA and SgB), Urban land – Coushatta Complex (UCA), and Caplis – Urban land Complex (CeA). Figure 3-9 delineates soils in proximity to the project corridor.

3.16.1 No-Build Alternative

The No-Build Alternative would have no effects on topography, geology, and soils.

3.16.2 Build Alternatives

Bridge Build Alternatives 5 and 7 and Access Build Alternatives A, B, and C generally would affect soils by soil disturbance, moderate cut and fill, and potential soil erosion. The proposed roadway would be cleared and paved, removing the soils from future biological and agricultural production.

The most extensive potential impacts would result from erosion of disturbed soils. Soil loss and soil erosion is considered a short-term potential impact, resulting from land clearing and construction activities. Cut and fill activities and construction equipment usage, specifically heavy earth moving equipment, could result in soil loss due to wind erosion and soil compaction.

Offsite movement of soils could lead to indirect impacts to streams and wetlands through sedimentation and degradation of water quality due to suspended soil in surface water. The proposed project could result in soil loss that could prevent the reestablishment of native vegetation throughout the study area unless the project sites are re-vegetated upon completion of construction activities. Compaction due to vehicle use could result in greater erosion potential due to lack of infiltration and loss of vegetation, resulting in greater runoff potential. Erosion due to water runoff during rain events and resultant sheet and rill flow would affect vegetation in the immediate area, water quality, and water resources. Erosion due to wind may affect air quality in the form of dust. Removal of vegetation and the conversion of these lands to developed areas would render the soil susceptible to erosion by wind and surface runoff.

3.16.3 Avoidance, Minimization, and Mitigation

Soil disturbance, moderate cut and fill, and potential soil erosion impacts will be mitigated through the use of BMPs which would reduce offsite movement of exposed soils during and after construction.

Figure 3-9. Soils Map

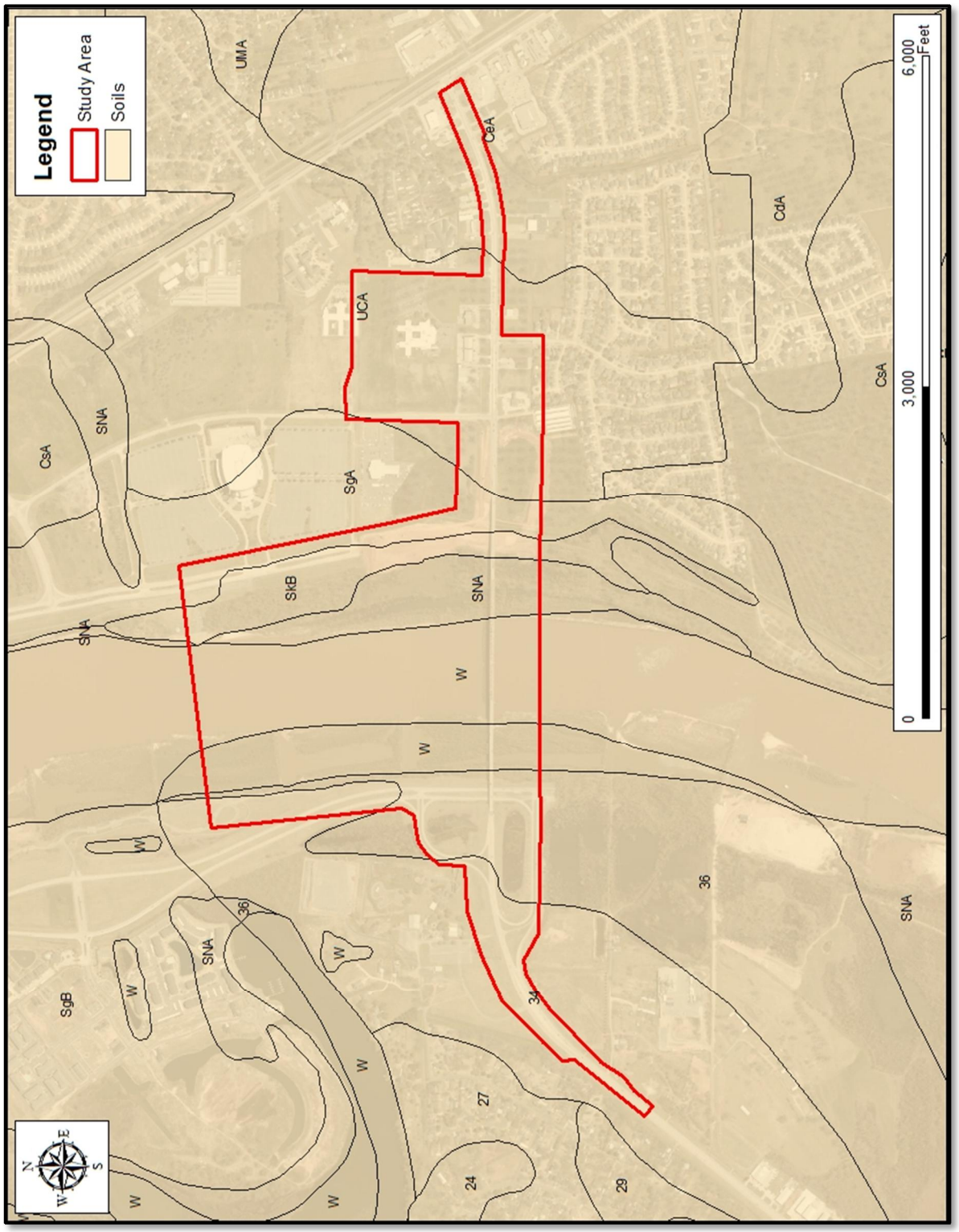

3.17 Vegetation, Significant Trees, and Wildlife

Vegetation

General vegetation communities within the project area were determined during the field surveys conducted between July 8, 2013 and July 12, 2013. This information, along with the current aerial photography was used to classify the project area into three general vegetation communities as described below:

Maintained Roads/Levees/Rights-of-Way/Lawns: This community consists of maintained lawns associated with commercial development, roadways, levees, and maintained road rights-of-way (ROW). These areas are best described as areas where clearing of the natural vegetation previously occurred and lawn grasses now dominate. These areas have not obtained a climax vegetation state because they are subject to periodic maintenance activities including mowing, leveling, clearing, or applications of herbicides to control plant growth. These communities make up the majority of the proposed study area and are dominated by bahia grass (*Paspalum notatum*), Bermuda grass (*Cynodon dactylon*), ryegrass (*Lolium perenne*), Johnson grass (*Sorghum halepense*), curly dock (*Rumex crispus*), giant ragweed (*Ambrosia trifida*), and eastern poison-ivy (*Toxicodendron radicans*).

Pecan Groves: This community consists of an open mature pecan (*Carya illinoinensis*) over-story with a lawn grass understory. The herbaceous vegetation is dominated by bahia grass, Bermuda grass, ryegrass, and Johnson grass.

Bottomland Hardwood Forest: This community is found within the batture areas on both sides of the Red River. The bottomland hardwood forest community is characterized by a natural hydrologic regime of alternating wet and dry periods. The community assists with the maintenance of water quality, provides ideal habitat for many fish and wildlife species, and supplies for flood storage. The over-story is typically dominated by American sycamore (*Platanus occidentalis*), sugar-berry (*Celtis laevigata*), eastern cottonwood (*Populus deltoids*), water hickory (*Carya aquatic*), ash-leaf maple (*Acer negundo*), black willow (*Salix nigra*), Chinese tallowtree (*Triadica sebifera*) and eastern poison-ivy (*Toxicodendron radicans*).

3.17.1 No-Build Alternative, Vegetation

The No-Build Alternative would have no effects on vegetation.

3.17.2 Build Alternatives, Vegetation

Long-term, minor, adverse impacts would be expected to occur to existing vegetation under the Bridge Build Alternatives 5 and 7 and under Access Build Alternatives B and C. Habitat loss and disturbance would be minor because of the linear nature of the proposed project, the previously disturbed nature of the proposed project and surrounding area, and the proximity of similar habitat. Long-term localized impacts from construction activities would be expected and would include removal of trees and shrubs accompanied by leveling operations and altering the original topography and soil structure. Project components that would result in direct impacts to vegetation communities include clearing within new ROW and crossing of the Red River. These activities would result in removal and permanent loss of existing vegetation.

Much of the project corridor has been previously disturbed and does not contain historical naturally occurring vegetation communities, with the exception of the

bottomland hardwoods within the batture of the Red River. Acreage impacts to vegetation communities are detailed in Table 3-14.

Table 3-14 Acres of Potential Impacts to Vegetation Communities by Alternative

Community	Alternatives						
	5	7	at-grade trail 1	at-grade trail 2	A	B	C
Maintained Roads/Levees/ROWs/Lawns	2.80	2.79	1.97	3.35	1.12	1.14	2.76
Bottomland Hardwood Forest	1.01	1.01	0	0	0	0	0
TOTAL	**3.81**	**3.80**	**1.97**	3.35	**1.12**	**1.14**	**2.76**

Significant Trees

DOTD policy defines a significant tree as a Live Oak, Red Oak, White Oak, Magnolia, or Cypress that is considered aesthetically important, 18" or greater in diameter at breast height (4' to 6' above the ground), and having a form that separates it from the surrounding vegetation or is considered historic.

Field screening within the alternative corridors did not locate Significant Trees either within or in immediate proximity to the existing right-of-way or within proposed right-of-way.

3.17.3 No-Build Alternative, Significant Trees

The No-Build Alternative would have no effect upon significant trees.

3.17.4 Build Alternatives, Significant Trees

Since no Significant Trees were identified within the project corridor, the Build Alternatives would have no effect upon significant trees.

Wildlife

The developed and maintained portions of the proposed study area, including roads/levees/ROWs, lawns and pecan groves, provide limited wildlife habitat. Common species that may be found include nine-banded armadillo (*Dasypus novemcinctus*), Virginia opossum (*Didelphis virginiana*), eastern cottontail (*Sylvilagus floridanus alacer*), raccoon (*Procyon lotor*), striped skunk (*Mephitis mephitis*), gray squirrel (*Sciurus carolinensis*), fox squirrel (*Sciurus niger ludovicianus*), various snake species, eastern kingbird (*Tyrannus tyrannus*), barn swallow (*Hirundo rustica*), purple martin (*Progne subis*), blue jay (*Cyanocitta cristata*), American crow (*Corvus brachyrhynchos*), northern mockingbird (*Mimus polyglottos*), American robin (*Turdus migratorius*), starling (*Sturnus vulgaris*), house sparrow (*Passer domesticus*), and northern cardinal (*Cardinalis cardinalis*).

The bottomland hardwood forest found in the batture of the Red River provides a secure and viable habitat for numerous species. The batture is a mini-habitat defined by the containment of the levee and is seasonally flooded. A variety of animals can exist on any particular stretch along the river depending on the season, location, and water condition; and many animals will utilize this area for shelter.

Bottomland hardwood forests provide year-round homes for resident birds, and also support migrants. Because large rivers (such as the Red) are used as

navigational aids by migrating birds, the bottomland hardwood forests located next to these rivers are important habitat for these long distance travelers. Examples of birds that may utilize the bottomland hardwood forest in the study area include waterfowl, herons, egrets, woodpeckers, owls, hawks, kites, woodcock, and various songbirds.

Bottomland hardwoods provide excellent habitat for many species of mammals as well. Common mammals that may be present within the proposed study area include raccoon, striped skunk, red fox (*Vulpes vulpes***)**, North American beaver (*Castor canadensis*), river otter (*Lutra canadensis*), Virginia opossum, grey squirrel, fox squirrel, bats, and small rodents. Amphibians that use bottomland hardwoods include salamanders, amphiuma, as well as many frogs. Bottomland hardwoods are also prime habitat for reptiles and can support a variety of snakes and turtles.

The Red River serves as a significant catfish (*Ictalurus* spp.), largemouth bass (*Micropterus salmoides*), bluegill (*Lepomis macrochirus*), and crappie (*Pomoxis* spp.) fishery and provides excellent sport and limited commercial fishing opportunities. Commercial species primarily caught are buffalo (*Ictiobus cyprinellus*), common carp (*Cyprinus carpio*), freshwater drum (*Aplodinotus grunniens*), various gar species, bowfin (*Amia calva*), and catfish. The Red River and its banks also provide habitat for aquatic insects and freshwater mussels and clams.

3.17.5 No-Build Alternative, Wildlife

The No-Build Alternative would have no effects on wildlife.

3.17.6 Build Alternatives, Wildlife

Short-term, minor, adverse impacts would be expected to wildlife during construction. Clearing the ROW would cause localized and temporary dispersal impacts, but wildlife would be expected to return to adjacent areas after construction is complete and to the proposed study area once pre-construction vegetation has returned.

Short-term, minor, adverse impacts to aquatic life could be expected during construction of the Build Alternatives. Construction of the proposed bridge and associated roadway improvements would leave large areas of earth unprotected, and sloping work could increase the potential for erosion of the surface material during storm events. The construction of roadside ditches could result in eroded material being carried from the construction site down-slope entering downstream wetlands or the Red River where sediment would be deposited. Sedimentation could degrade water quality by increasing turbidity, suspended solids, and pollutants in the Red River and Mack's Bayou.

Sediment deposition also potentially would reduce floodwater storage capacity, change water depths and flow patterns, and block water inflow or outflow paths. Additionally, large volumes of sediment could adversely impact vegetative species by cutting off oxygen to their roots, and could bury the eggs of aquatic organisms that use the Red River and Mack's Bayou for breeding purposes. Sediment deposition could fill pools and interstitial spaces along the banks of the river, choking out aquatic vegetation and smothering benthic organisms such as clams and mussels.

Increased turbidity (suspended soils or sediments) in the Red River and Mack's Bayou can harm aquatic life, especially benthic (sediment-dwelling) organisms that are an important part of the food chain. Increased turbidity can result from direct disturbance of sediments through proposed activities such as the placement of bridge pilings or anchors or from construction-exposed soils eroding during rainstorms and flowing into the water bodies. Turbid water interferes with respiration and filter-feeding behavior of macro-invertebrates as well as reduces fish feeding success due to visual impairment. Turbidity also decreases photosynthesis for primary producers.

Additional short-term, minor, adverse impacts could be expected from noise and lights from construction activities. Light and noise could affect migration, breeding, and nesting of wildlife in the vicinity of the roadway. Short-term, minor, adverse impacts to wildlife species during project construction could include temporary disturbances to nesting and annual migration patterns of birds passing over or stopping in Caddo and Bossier Parish.

The Migratory Bird Treaty Act (MBTA) protects nesting birds in their summer reproductive and foraging habitat. This may include large forest blocks, grassland-nesting area, floodplain nesting sites, and any nesting location used by migratory birds. The proposed study area is in the Red River flyway and is a principal route for some migratory birds. Migratory birds rely on the Red River for foraging, breeding, and nesting. Land clearing and noise during construction could disrupt bird stopovers, but those impacts would be temporary and localized during construction, resulting in only minor, short-term impacts.

3.17.7 Avoidance, Minimization, and Mitigation

During final design or construction, if any significant trees are identified, the procedures defined in EDSM I.1.1.21 Treatment of Significant Trees in DOTD Right-of-Way will be followed. This EDSM is a general policy governing the treatment of significant trees by the DOTD within the highway right-of-way, zone of construction, or operational influence. It contains a list of the five species that may be considered for implementation of a context sensitive design (i.e. preservation, specified limited impact, or special treatment) where practical. Any large trees to be removed by DOTD or its contractors will be announced to the appropriate officials early enough in the project to allow for adequate time for them to respond.

Impacts to wildlife resulting from sediment deposition or increased turbidity will be reduced to less than significant levels by the proper use of BMPs (see Section 3.12, Surface Water Resources).

3.18 Threatened and Endangered Species

The *Endangered Species Act of 1973* (ESA) [16 U.S.C. 1531 et. seq.], as amended, was enacted to provide a program for the preservation of endangered and threatened species and to provide protection for the ecosystems upon which these species depend for their survival. All federal agencies or projects utilizing federal funding are required to implement protection programs for designated species and to use their authorities to further the purposes of the Act.

The U.S. Fish and Wildlife Service (USFWS) is the primary agency responsible for implementing the ESA for birds and terrestrial and freshwater species. The USFWS responsibilities under the ESA include: (1) the identification of threatened and endangered

species; (2) the identification of critical habitats for listed species; (3) implementation of research on, and recovery efforts for, these species; and (4) consultation with other federal agencies concerning measures to avoid harm to listed species.

A threatened species is a species likely to become endangered within the foreseeable future throughout all or a significant portion of its range. An endangered species is a species in danger of extinction throughout all or a significant portion of its range.

In addition, the USFWS has identified species that are candidates for listing as a result of identified threats to their continued existence. The candidate designation includes those species for which the USFWS has sufficient information on hand to support proposals to list as threatened or endangered under the ESA; however, proposed rules have not yet been issued because such actions are precluded at present by other listing activity. Federally protected species of potential occurrence in Bossier and/or Caddo Parishes are listed in Table 3-15.

Table 3-15. Federally Protected Species of Potential Occurrence in Bossier and Caddo Parishes

Common Name	Scientific Name	Federal Status	Habitat
Interior least tern	*Sterna antillarum*	Endangered	Sand and gravel bars in rivers
Pallid sturgeon	*Scaphirhynchus albus*	Endangered	Large turbid rivers
Red-cockaded woodpecker	*Picoides borealis*	Endangered	Mature pine forests
Louisiana Black Bear	*Ursus americanus luteolus*	Threatened	Mature BLH forests
Earth-fruit	*Geocarpon minimum*	Threatened	Saline soil prairies
Sprague's pipit	*Anthus spragueii*	Candidate	Grasslands and prairies

Source: USFWS 2013

Solicitation of Views (SOV) letters were sent to the USFWS and the Louisiana Natural Heritage Program (LNHP) requesting information concerning possible protected species within the proposed study area. Responses were received from both agencies and are included in Appendix B. In a response dated June 26, 2013, the USFWS stated "*the project, as proposed, is not likely to adversely affect those resources under our jurisdiction and currently protected by the Endangered Species Act of 1973*". Also included in Appendix B is a copy of the results of the use of the online tool suggested by the USFWS, which agrees with the SOV response. The LNHP response dated August 8, 2013, noted occurrences of the Interior Least Tern in the project vicinity and that the Pallid Sturgeon also is known to occur in the Red River. The response states that "*After careful review of our database, no other impacts to rare, threatened, or endangered species or critical habitat are anticipated for the proposed project*."

Surveys were conducted within the study area to identify any potential protected species habitat between July 9, 2013 and July 11, 2013. No habitat was identified within the study area that could support the red-cockaded woodpecker, earth-fruit, or Sprague's pipit. The Louisiana black bear habitat is very limited due to the urban and built-up nature of the surrounding areas. No interior least terns were observed flying or feeding near the proposed study area during the surveys. Additionally, no interior least tern nesting habitat (*i.e.*, sandbars) was observed near the study area. Potential habitat (the Red River) does exist for the pallid sturgeon; however, the presence or absence of this species could not be confirmed.

A separate technical report titled *Protected Species Report, Red River Bridge at Jimmie Davis Highway, Route LA 511, Bossier and Caddo Parishes* was prepared as a supplement

to this document. This report provides additional background information on each of the listed species, survey methodology, and results.

3.18.1 No-Build Alternative

The No-Build Alternative would have no effect on threatened and endangered species.

3.18.2 Build Alternatives

No effects to the red-cockaded woodpecker, earth-fruit, or Sprague's pipit are anticipated from any of the Build Alternatives because no habitat for these species exists within the study area. No effects to the Louisiana black bear are anticipated from of any of the Build Alternatives.

Consultation with the USFWS and LNHP was initiated via SOV letters dated June 17, 2013. A response letter dated June 26, 3013 was received from USFWS stating, "*The project, as proposed, is not likely to adversely affect those resources under our jurisdiction and currently protected by the Endangered Species Act of 1973*". In a letter dated August 8, 2013, the LNHP expressed concern for two species, the interior least tern and the pallid sturgeon, potentially occurring within the study area.

Based on field surveys, there is no nesting habitat near the study area. Additionally, the proposed project should not interfere with birds travelling along, and feeding in, this reach of the Red River. Therefore, the Build Alternatives are not likely to adversely affect the interior least tern.

The presence/absence of pallid sturgeon within the proposed study area is possible, but could not be confirmed during field efforts. With the proper use of DOTD required Best Management Practices (BMPs) (see Section 3.12, Surface Water Resource), flow, turbidity, and water temperature would remain unchanged. Therefore, the Build Alternatives are not likely to adversely affect the pallid sturgeon.

3.18.3 Avoidance, Minimization, and Mitigation

The Louisiana Natural Heritage Program recommends the following in an effort to minimize or mitigate potential impacts to endangered species:

Interior Least Tern - "w*ork activities occur outside of the breeding season (late April through August) and should minimize the impacts to interior least tern habitat*". However, if construction activities during the breeding season (late April through August) are unavoidable, further consultation with the LNHP is recommended to determine what measures, if any, are suggested.

Pallid Sturgeon - LNHP states that "*pallid sturgeon typically spawns from May-August, but successful reproduction has been severely reduced due to habitat modification. This includes the loss of habitat through the construction of dams that have modified flows, reduced turbidity, and lowered water temperatures*." The LNHP letter goes on to recommend that "*necessary measures are taken to avoid the breeding season and any degradation of water quality*". If construction activities during the breeding season (May-August) are unavoidable, further consultation with the LNHP is recommended to determine what measures, if any, are suggested.

DOTD will avoid construction during the breeding seasons of the Interior Least Tern and the Pallid Sturgeon to the extent that it is feasible. If construction during those periods is unavoidable, further consultation with LNHP will be initiated to determine what measures are suggested.

3.19 Air Quality

"Air Pollution" is a general term that refers to one or more chemical substances that degrade the quality of the atmosphere. Individual air pollutants degrade the atmosphere by reducing visibility, damaging property, reducing the productivity or vigor of crops or natural vegetation, or reducing human or animal health. Regulations for air pollutant emissions exist to protect human health and welfare, and the environment.

The federal agency that develops and enforces the regulations that help govern air quality is the Environmental Protection Agency (EPA). The 1970 federal *Clean Air Act* established *National Ambient Air Quality Standards* (NAAQS) to protect the public health. Eight air pollutants have been identified by the EPA as being of concern nationwide: carbon monoxide, sulfur oxides, hydrocarbons, nitrogen oxides, ozone, particulate matter sized 10 micrometers or less, particulate matter with a size of 2.5 micrometers or less and lead. The sources of these pollutants, their effects on human health, and their concentrations in the atmosphere vary considerably. Below is a brief description of each pollutant.

- **Ozone (O_3)** is a strong oxidizer and a pulmonary irritant that affects the respiratory mucous membranes, other lung tissues, and respiratory functions. Exposure to ozone can impair the ability to perform physical exercise, can result in symptoms such as tightness in the chest, coughing, and wheezing, and can ultimately result in asthma, bronchitis, and emphysema. Motor vehicles do not emit ozone directly. Emissions of volatile organic compounds (VOC) and nitrogen oxides (NO_x), which are the precursor pollutants to ozone formation, react in the presence of sunlight to form ozone in the atmosphere. These reactions occur over periods of hours to days during atmospheric mixing and transport downwind. Accordingly, ozone and its precursors VOC and NO_x are regulated at the regional level as part of the Northwest Louisiana Council of Governments' (NLCOG) transportation plan.
- **Carbon Monoxide (CO)** is a colorless and odorless gas, which is a product of incomplete combustion. CO is absorbed by the lungs and reacts with hemoglobin to reduce the oxygen carrying capacity of the blood. At low concentrations, CO has been shown to aggravate the symptoms of cardiovascular disease. It can cause headaches and nausea, and at sustained high concentration levels, can lead to coma and death. CO concentrations are not related to ozone levels. CO concentrations tend to be highest in localized areas because they are most affected by local traffic congestion, since motor vehicles are a major source of CO emissions.
- **Particulate matter (PM_{10} and $PM_{2.5}$)** is made up of small solid particles and liquid droplets. PM_{10} refers to particulate matter with an aerodynamic diameter of 10 microns and smaller, and $PM_{2.5}$ refers to particulate matter with an aerodynamic diameter of 2.5 microns and smaller. Particulates enter the body by way of the respiratory system. Particulates over 10 microns in size are captured in the nose and throat and are readily expelled from the body. Particles smaller than 10 microns, and especially particles smaller than 2.5 microns, can reach the air ducts (bronchi) and the air sacs (alveoli). Particulates, especially $PM_{2.5}$, have been associated with increased incidence of respiratory diseases such as asthma, bronchitis, and emphysema; cardiopulmonary disease; and cancer. The majority of PM emissions from mobile sources are attributed to diesel vehicles.

- **Sulfur dioxide (SO2)** is a gas that is formed during the combustion of fuels containing sulfur compounds. It can cause irritation and inflammation of tissues with which it comes into contact. Inhalation can cause irritation of the mucous membranes causing bronchial damage, and it can exacerbate pre-existing respiratory diseases such as asthma, bronchitis, and emphysema. Exposure to SO_2 can cause damage to vegetation, corrosion to metallic materials, and soiling of clothing and buildings. Due to the implementation of EPA's Ultra-Low Sulfur Diesel Fuel Requirements taking effect since 2006, SO_2 is not expected to be a concern as a result of the project.
- **Lead (Pb)** is no longer considered to be a pollutant of concern for transportation projects. The major source of lead emissions to the atmosphere had been from motor vehicles burning gasoline with lead-containing additives. However, lead emissions have been nearly eliminated with the conversion to unleaded gasoline nationwide.
- **Mobile Source Air Toxics (MSAT**) are a subset of the 188 air toxics defined by the Clean Air Act. Most air toxics originate from human-made sources, including on-road mobile sources, non-road mobile sources (e.g., locomotives, airplanes), area sources (e.g., dry cleaners) and stationary sources (e.g., factories or refineries). The EPA currently includes 21 air toxics in its full list of MSATs, and identifies six of those as primary MSATs. The six primary MSATs are benzene, formaldehyde, acetaldehyde, diesel particulate matter/diesel exhaust gases, acrolein, and 1, 3-butadiene. Some toxic compounds are present in fuel and are emitted to the air when the fuel evaporates or passes through the engine unburned. Other toxics are emitted from the incomplete combustion of fuels or as secondary combustion products. Metal air toxics also result from engine wear or from impurities in oil, diesel fuel, or gasoline. There currently are no established ambient air quality standards for MSATs.

Pollutants of Concern

The pollutants that are most important for this air quality assessment are those that are traceable principally to motor vehicle engines and electrical power plants. In the study area, ambient concentrations of CO and O_3 are predominantly influenced by roadway motor vehicle activity. Emissions of VOCs, NO_x, PM_{10}, and $PM_{2.5}$ come from both mobile and stationary sources, while emissions of SO_x and Pb are associated mainly with various stationary sources. Electricity purchased from the national electrical grid may be produced by either fossil-fueled plants or renewable energy plants, or even both.

CO is the primary pollutant used to indicate the potential for adverse air quality impacts from motor vehicles in general, and at roadway intersections in particular. This is because roadway motor vehicles produce most of the ambient CO, and emission rates of CO from vehicles are relatively high in comparison to emissions of other pollutants. The federal and state ambient air quality standards are set up in such a way that, should adverse impacts occur the CO standard would most likely be exceeded first.

Similarly, $PM_{2.5}$ is also evaluated especially since the project is located in a nonattainment area, as discussed in Section 3.19.2. However, since $PM_{2.5}$ is most prevalent in diesel-powered vehicles, the onset of impact from the project is remote because the project is not of air quality concern as defined by the Transportation Conformity Rule as defined in 40 CFR 93.123(b)(1).

Similarly, because O_3 is a regional pollutant that is formed in the presence of VOC and NO_x, O_3 is evaluated indirectly through its precursors. However, because the CO standard would be exceeded first before either NO_2 or VOCs, only CO is typically evaluated at intersection hot spots. As a result, concentrations of O_3 are typically measured directly in the atmosphere rather than through modeling predictions.

Regulatory Setting

The US Department of Transportation (USDOT) *Procedures for Considering Environmental Impacts* (DOT Order 5610.1C, updated July 24, 2012), states under the topic of Air Quality, "There should be an assessment of the consistency of the alternatives with Federal and State plans for the attainment and maintenance of air quality standards."

The Clean Air Act, as amended, is the basis for most federal air pollution control programs. The EPA under the Clean Air Act regulates air quality nationally. The EPA delegates authority to the Louisiana Department of Environmental Quality (LDEQ) for monitoring and enforcing air quality regulations in the State of Louisiana. The Louisiana State Implementation Plan (SIP), developed in accordance with the *Clean Air Act*, contains the major state-level requirements with respect to transportation in general. The LDEQ is responsible for preparing the SIP and submitting it to the EPA for approval.

Evaluation Criteria

Under the authority of the Clean Air Act, the EPA established a set of *National Ambient Air Quality Standards* (NAAQS) for various "criteria" air pollutants. Table 3-16 lists the NAAQS and the Louisiana Ambient Air Quality Standards, which are identical. Presently, there are NAAQS for seven criteria pollutants: O_3, CO, NO_2, SO_2, PM_{10}, $PM_{2.5}$, and Pb. Any project constructed in Louisiana has to achieve compliance with these standards.

The *Clean Air Act* also requires the EPA to specify geographic areas of the country that have measured pollutant concentrations exceeding the levels prescribed by the air quality standards (non-attainment areas). It classifies non-attainment areas and specifies compliance deadlines for these areas. The project is located in Caddo and Bossier Parishes, which are part of the EPA-defined Metropolitan Shreveport-Bossier City Air Quality Designation Area that is currently designated as attainment/unclassified for all criteria pollutants including O_3, CO, PM_{10}, $PM_{2.5}$, NO_2, SO_2, and Pb.

Under the Clean Air Act, it is the responsibility of federal agencies, such as the FTA, to ensure that a proposed project conforms to the SIP. Transportation conformity is a process required of the Northwest Louisiana Council of Governments (NLCOG) as the region's metropolitan planning organization, to ensure that those transportation activities that are consistent with air quality goals receive federal funding and approval. The EPA promulgated the Transportation Conformity Rules under the Clean Air Act, as amended (40 CFR Parts 51 and 93)[2]. The study area for air quality is the intersections modeled.

Methodology

In accordance with EPA guidance, the analysis methodology typically consists of a hot spot analysis, which is an intersection assessment and a dispersion modeling analysis for computing CO concentrations at candidate intersections along the corridor. Motor vehicles emit CO at the highest rates when they are operating at low speeds or idling. For this reason, the potential for adverse air quality impacts is greatest at intersections where traffic is most congested. Using the traffic analysis prepared for the project, intersections are screened or selected based on congestion and volumes. The intersection screening is conducted in accordance with methods based on EPA criteria found in the *Guidelines for Modeling Carbon Monoxide from Roadway Intersections.*

However, the prescribed methodologies for conducting a hot spot analysis at intersections with level of service (LOS) ratings 'D' or worse are generally only applied to projects located

[2] Guidelines for Modeling Carbon Monoxide from Roadway Intersections, US Environmental protection Agency, Office of Air Quality Planning and Standards, Research Triangle, NC, November 1992.

in non-attainment areas. Since the project is located in an attainment area for all criteria pollutants, a hot spot analysis is not required because the likelihood of impact is remote.

Therefore, the evaluation of air quality impacts due to the project were evaluated qualitatively based on the region's attainment status and the project traffic projections.

Table 3-16. National and Louisiana Ambient Air Quality Standards

Pollutant	Standard Type	Averaging Period	Standard Value[3]
Carbon Monoxide (CO)	Primary[4]	8-Hour average	9 ppm (10 mg/m3)[5]
	Primary	1-Hour average	35 ppm (40 mg/m^3)
Nitrogen Dioxide (NO_2)	Primary and Secondary	Annual arithmetic mean	53 ppb[6]
	Primary	1-Hour average	100 ppb
Ozone (O_3)	Primary and Secondary	8-Hour average	0.075 ppm (155 µg/m^3)[7]
Sulfur Dioxide (SO_2)	Primary	Annual arithmetic mean	0.03 ppm (80 µg/m^3)
	Primary	24-Hour average[8]	0.14 ppm (365 µg/m^3)
	Secondary	3-Hour average	0.5 ppm (1300 µg/m^3)
	Primary	1-Hour Average[9]	75 ppb (0.075 ppm)
Particulate Matter (PM_{10})	Primary and Secondary	24-Hour average	150 µg/m^3[10]
Particulate Matter ($PM_{2.5}$)	Primary and Secondary	Annual arithmetic mean	12 µg/m^3
		24-Hour average	35 µg/m^3
Lead (Pb)	Primary and Secondary	3-month rolling average	0.15 µg/m^3

Note: CO, NO_2, O_3, and PM are transportation related pollutants
Source: 40 CFR 50, National Primary and Secondary Ambient Air Quality Standards.

Affected Environment

The Air Quality Assessment Division of LDEQ develops and implements plans and programs to meet and maintain federal and Louisiana air quality standards. The LDEQ monitors air quality to ensure that the county meets and maintains national air quality health standards. LDEQ protects and manages the region's air resources in accordance with the Louisiana Revised Statutes and Civil Code (LA Rev Stat § 30:2054).

3 Short-term standards (1 to 24 hours) are not to be exceeded more than once per calendar year.

4 Former national secondary standards for carbon monoxide have been repealed.

5 Concentrations are shown in parts per million (ppm), milligrams per cubic meter (mg/m3) or micrograms per cubic meter (□g/m3).

6 The official level of the annual NO2 standard is 0.053 ppm, equal to 53 ppb, which is shown here for the purpose of clearer comparison to the 1-hour standard.

7 Maximum daily one-hour (eight-hour) average. The ozone standard is attained when the expected number of days with maximum hourly (eight-hourly) average concentrations above the value of the standard, averaged over a three year period, is less than or equal to one. The O3 criterion was updated by the EPA on May 27, 2008 from 0.08 to 0.075 ppm.

8 National standards are block averages rather than moving averages.

9 For each particle size, the annual PM standard is met when the three-year average of the annual mean concentration is less than or equal to the value of the standard. The 24-hour PM10 (PM2.5) standard is met when the three-year average of the annual 99th (98th) percentile values of the daily average concentrations is less than or equal to the value of the standard.

10 Final rule signed June 2, 2010. To attain this standard, the 3-year average of the 99th percentile of the daily maximum 1-hour average at each monitor within an area must not exceed 75 ppb.

Based on recent monitoring data, no exceedances of the NAAQS have been reported through 2013 except one ozone violation along Airport Drive. This violation of the ozone NAAQS is currently being validated by the LDEQ.

3.19.1 No-Build Alternative

Under the No-Build Alternative, air quality is expected to be similar to the existing conditions. The study area is located in a region that has been designated by the EPA as in attainment for all criteria pollutants because no exceedances of the NAAQS were reported in the region with the exception of one ozone violation in 2013 along Airport Road in Shreveport. For regional pollutants such as ozone, the monitoring stations frequently are not in the study area, as in this case.

3.19.2 Build Alternatives

The assessment of air quality impacts is the same for Build Alternatives 5 and 7 as discussed in the following subsections:

Regional Conformity

The proposed project is expected to be included in and consistent with the NLCOG financially constrained 2030 Long Range Transportation Plan (LRTP), "Mapping the Way – 2030", currently under development by NLCOG.

As the project is located in an attainment area for all National Ambient Air Quality Standards (NAAQS), the transportation conformity rules do not apply. However, due to a single elevated monitored ozone level in 2013, the metropolitan region Metropolitan Statistical Area (MSA) has the potential for Environmental Protection Agency (EPA) designation as in non-attainment of the federal 8-hour ozone air quality standard in the future. The metropolitan Shreveport-Bossier City area is working with the EPA to proactively address and implement emission reduction strategies before being designated as a nonattainment area. This collaboration is intended to result in the development and implementation of an emission reduction plan to maintain attainment of the 8-hour ozone standard.

Operational Air Quality Effects

In determining whether a hot spot analysis is required for the project, the Transportation Conformity guidelines "Procedures for determining localized CO, PM_{10}, and $PM_{2.5}$ concentrations (hot-spot analysis)", as described in 40 CFR 93.123, were reviewed. According to these guidelines, the project would not exceed the relevant criterion in 40 CFR 93.123(b)(1)(i). Specifically, the project would not create "New highway projects that have a significant number of diesel vehicles, and expanded highway projects that have a significant increase in the number of diesel vehicles". Based on Appendix A of EPA's March 2010 "Transportation Conformity Guidance for Quantitative Hot-spot Analyses in $PM_{2.5}$ and PM_{10} Nonattainment and Maintenance Areas," an example of a project that is not an air quality concern under 40 CFR 93.123(b)(1) would be a "new or expanded highway project that primarily services gasoline vehicle traffic (i.e., does not involve a significant number or increase in the number of diesel vehicles), including such projects involving congested intersections operating at Level-of-Service D, E, or F)."

Although trucks and buses would utilize the new bridge, trucks and buses currently use the existing bridge and would simply continue with the same volume as under the existing conditions. Even if the future truck and bus volumes increase slightly due to the perception of improved travel times as a result of the new bridge, this slight increase would not result in "expanded highway projects that have a significant increase in the number of diesel vehicles" as defined by 40 CFR 93.123.

Similarly, although motor vehicle emissions at congested intersections are the predominant source of CO, the study area continues to be designated as in attainment for CO. Therefore, a CO hot spot analysis also is not required because the project is not expected to significantly degrade the level of service at nearby congested intersections. Except for the intersection of Arthur Ray Teague Parkway and Jimmie Davis Highway (East 70th Street), overall congestion delay at all other intersections with level of service (LOS) 'D' would either decrease as a result of the project or increase slightly. At the intersection of Arthur Ray Teague Parkway and Jimmie Davis Highway, overall congestion delay is expected to increase only slightly by less than 10 percent as a result of the project. However, since recent concentrations of CO monitored in the vicinity of the project by the LDEQ are well below the NAAQS, no exceedances would reasonably be expected under the Build Alternative.

Therefore, based on the insignificant level of truck and bus service proposed as part of the project, neither a qualitative nor a quantitative $PM_{2.5}$ or CO hotspot analysis is required for this project since it is not a project of local air quality concern under 40 CFR 93.123(b)(1). The Clean Air Act Amendments (CAAA) and the Transportation Conformity requirements are met without a hotspot analysis since this project has been found not to be of air quality concern under 40CFR 93.123(b)(1). Therefore, the project meets statutory and regulatory transportation conformity requirements for CO and $PM_{2.5}$ without a hot-spot analysis.

Based on the traffic analysis and the current attainment status, no adverse air quality impacts are expected, either directly or indirectly, due to the implementation and improvements proposed as part of the project.

3.19.3 Avoidance, Minimization, and Mitigation

The project is located in an area that has been designated by the EPA as in attainment for all criteria pollutants. Additionally, predicted traffic under the Build Alternatives is expected to be constant or increase marginally as a result of the new bridge. Therefore, no exceedances of the NAAQS are expected under the Build Alternatives. As a result, no mitigation measures are required.

Air quality impacts due to temporary construction are discussed in Section 3.24.

3.20 Noise

Human Perception of Noise

Noise is "unwanted sound" and, by this definition, the perception of noise is a subjective process. Several factors affect the actual level and quality of sound (or noise) as perceived by the human ear and can generally be described in terms of loudness, pitch (or frequency), and time variation. The loudness or magnitude of noise determines its intensity and is measured in decibels (dB) that may range from below 40 decibels (the rustling of leaves) to

over 100 decibels (a rock concert). Pitch describes the character and frequency content of noise such as the very low "rumbling" noise of stereo sub-woofers, or the very high-pitched whistle noise. Finally, the time variation of some noise sources can be characterized as continuous, such as a building ventilation fan; intermittent, such as for a train passby; or impulsive, like pile driving construction activities.

Various sound levels are used to quantify noise from transportation sources, including a sound's loudness, duration, and tonal character. For example, the A-weighted decibel (dBA) is commonly used to describe the overall noise level because it is an attempt to take into account the human ear's response to audible frequencies. Because the decibel is based on a logarithmic scale, a 10-decibel increase in noise level is generally perceived as a doubling of loudness, while a 3-decibel increase in noise is just barely perceptible to the human ear. Typical A-weighted sound levels from highway and other sources are shown in Figure 3-10.

The A-weighted noise descriptor used to determine impacts from highway related sources is L_{eq}, which represents a level of constant noise with the same acoustical energy as the fluctuating noise levels observed during a given interval. The $L_{eq}(h)$ metric, which represents the average acoustical energy for one hour, is used to evaluate traffic noise levels in accordance with DOTD's *Highway Traffic Noise Policy*.

Highway Noise Evaluation Criteria

Potential negative impact from traffic noise is assessed on the basis of predicted noise levels approaching or exceeding the Federal Highway Administration's (FHWA) *Noise Abatement Criteria* (NAC). As shown in Table 3-17, the NAC for residences and similar sensitive exterior receivers is a one-hour equivalent sound level [$L_{eq}(h)$] of 67 dBA during the peak traffic hour. The DOTD has set their limits to one decibel less than the FHWA criteria. These noise levels are used by DOTD to evaluate the need for noise mitigation measures due to highway improvements.

The DOTD *Highway Traffic Noise Policy* has defined "approaching" as within one decibel of the FHWA NAC for residential or other similar sensitive land use areas. In addition, DOTD defines a "substantial increase" as 10 dBA greater than existing noise levels.

FHWA guidelines and the DOTD *Highway Traffic Noise Policy* indicate that abatement should be considered if the noise criteria described above are exceeded. However, the abatement measures must be both "feasible" and "reasonable" to be recommended for implementation.

According to the DOTD *Highway Traffic Noise Policy*, feasibility refers to engineering considerations (e.g., can a barrier be built given the topography of the location; can a substantial noise reduction be achieved given certain access, drainage, safety, or maintenance requirements; are other noise sources present in the area, etc.). For instance, maintaining access to commercial properties often requires gaps in barriers at entrance and exit driveways and reduces their effectiveness to the point that substantial noise reduction is not feasible.

Additionally, a noise barrier would be considered feasible if the modeled reduction of projected noise levels by at least 5 dBA is achieved at 75 percent of the first row of impacted receptors adjacent to the barrier.

Reasonableness of noise barriers include cost/benefit, maintainability, and land use conformity considerations. Although reasonableness is generally a more subjective criterion (which implies that common sense and good judgment were applied in arriving at a decision), a cost per benefitted receiver of $35,000 is used to assess the cost-effectiveness

of a noise barrier. As part of the reasonableness cost analysis, DOTD includes only benefited receptors whose barrier insertion loss is 5 dBA or greater.

- 5-dBA reduction to be considered benefited;
- 75% of first-row residences must receive a 5-dBA reduction to be feasible;
- To be reasonable, noise abatement measures should achieve a noise reduction of 8 dBA at a minimum of at least one receptor (Noise Reduction Goal);
- Also, to assess cost-effectiveness of noise abatement measures, the barrier cost (for example), should be equal to or less than $35,000 per benefited receptor;
- As part of the NEPA public involvement process, viewpoints from the community, including benefited receptors, will be solicited for all aspects of the project, including noise impacts and abatement. Any abatement measure that receives 50 percent or more positive feedback would be considered reasonable as well.

3.20.1 Noise Monitoring Results

To determine the existing noise levels at sensitive receptors in the vicinity of the proposed Jimmie Davis Bridge and Highway improvements, a noise-monitoring program was conducted at several representative locations shown on Figure 3-11 and described in Table 3-18. Hourly equivalent A-weighted noise levels [or L_{eq}(h) in dBA] were measured at six representative receptors during the off-peak periods of the day according to the DOTD *Highway Traffic Noise Policy*. The noise measurements document existing noise sources in the area such as background traffic along Jimmie Davis Highway and other existing non-traffic related activity in the immediate area (such as railroad operations parallel to US 71, chirping birds, distant conversations and rustling of leaves). The background noise measurements were conducted on January 13-14, 2014.

During the noise monitoring period, concurrent traffic volumes and speeds were also documented. These input data, along with the roadway and terrain geometries, were used to develop a software prediction model. Following DOTD's *Highway Traffic Noise Policy* and FHWA's requirements, FHWA's *Traffic Noise Model* (TNM Version 2.5) was used to replicate the measured noise levels in the field and thereby validate the prediction model (see Section 3.20.4, for a discussion of predicted noise levels).

3.20.2 Noise Measurement Validation

As part of the noise monitoring program, short-term noise measurement results were compared with predicted noise levels using the observed traffic volumes, vehicle mix and speeds. Consistent with the DOTD *Highway Traffic Noise Policy*, these data were used to help validate FHWA's TNM prediction model. The validated prediction model was then used to determine future noise levels from the roadway improvements using the same receptor sites but with traffic volumes for the existing and future Design Year. This validation exercise is intended to improve the future prediction modeling by verifying a strong correlation between existing measured and predicted noise levels using the same traffic data. As shown in Table 3-19, the model validation exercise resulted in good correlation for all monitoring sites whose background noise levels are dominated by existing traffic along Jimmie Davis Highway. At sites M3 and M5, however, the predicted noise levels are lower than the measured noise due to other ambient activities present at the time of the monitoring. The noise monitoring sites are shown graphically on Figure 3-11.

Figure 3-10. Typical A-Weighted Noise Levels

Outdoor Sound Levels	Sound Level (dBA)	Indoor Sound Levels
	110	Rock band at 5 m (16 ft)
Jet over flight at 300 m (1,000 ft)	105	
	100	Inside New York subway train
Gas lawn mower at 1 m (3 ft)	95	
	90	Food blender at 1 m (3 ft)
Diesel truck at 15 m (50 ft)	85	
Noisy urban area — daytime	80	Garbage disposal at 1 m (3 ft)
	75	Shouting at 1 m (3 ft)
Gas lawn mower at 30 m (100 ft)	70	Vacuum cleaner at 3 m (10 ft)
Suburban commercial area	65	Normal speech at 1 m (3 ft)
	60	
Quiet urban area — daytime	55	Quiet conversation at 1 m (3 ft)
	50	Dishwasher in next room
Quiet urban area — nighttime	45	
	40	Empty theater or library
Quiet Suburb — nighttime	35	
	30	Quiet bedroom at night
Quiet Rural Area — nighttime	25	Empty concert hall
Rustling leaves	20	
	15	Broadcast and recording studios
	10	
	5	
Reference pressure level	0	Threshold of hearing

mPA MicroPascals describe pressure. The pressure level is what sound level monitors measure.
dBA A-weighted decibels describe pressure logarithmically with respect to 20 mPa (the reference pressure level).
Source: Highway Noise Fundamentals, Federal Highway Administration, September 1980.

Table 3-17. FHWA Noise Abatement Criteria, Hourly A-weighted Sound Level Decibels (dBA)

Activity Category	Activity Leq (H)	Evaluation Location	Activity Description	In Louisiana, Impact Occurs When Noise Level Is Equal To Or Greater Than The Values Below[11]
A	57	Exterior	Lands on which serenity and quiet are of extraordinary significance and serve an important public need and where the preservation of those qualities is essential if the area is to continue to serve its intended purpose.	56
B	67	Exterior	Residential (includes undeveloped lands permitted for residential).	66
C	67	Exterior	Active sport areas, amphitheaters, auditoriums, campgrounds, cemeteries, day care centers, hospitals, libraries, medical facilities, parks, picnic areas, places of worship, playgrounds, public meeting rooms, public or nonprofit institutional structures, radio studios, recording studios, recreation areas, Section 4(f) sites, schools, television studios, trails, and trail crossings. (Includes undeveloped lands permitted for these activities).	66
D	52	Interior	Auditoriums, day care centers, hospitals, libraries, medical facilities, places of worship, public meeting rooms, public or nonprofit institutional structures, radio studios, recording studios, schools, and television studios.	51
E	72	Exterior	Hotels, motels, offices, restaurants/bars, and other developed lands, properties or activities not included in A-D or F. (Includes undeveloped lands permitted for these activities).	71
F	------	------	Agriculture, airports, bus yards, emergency services, industrial, logging, maintenance facilities, manufacturing, mining, rail yards, retail facilities, shipyards, utilities (water resources, water treatment, electrical), and warehousing.	n/a
G	------	------	Undeveloped lands that are not permitted.	n/a

Source: 40 CFR 50, National Primary and Secondary Ambient Air Quality Standards.

Table 3-18 shows the measured hourly average noise levels [L_{eq}(h)] range from 59 dBA at Site M5 (Group Home) to 72 dBA at Site M1 (residences along Dixie Loop Road). A 24-hour continuous monitor was set-up at Site M7 to determine the loudest period of the day. Based on the 24-hour monitoring results, the loudest times of the day are the morning and afternoon peak-hour periods.

Table 3-18 Baseline Noise Level Measured along Jimmie Davis Highway (dBA)

Site ID	Receptor Description	FHWA Category	Dwelling Units[12]	Distance to Jimmie Davis Highway	Existing Noise L_{eq} (h)
M1	Residences, Dixie Loop Road	B (Residential)	1	250 ft.	72
M2	Riverpark Church	C (Church)	1	250 ft.	65
M3	Residences, Cairo Court	B (Residential)	1	375 ft.	64
M4	Cornerstone Hospital	C (Hospital)	1	500 ft.	61
M5	Residences, Group Home	B (Residential)	5	350 ft.	59
M6	Barksdale Baptist Church	C (Church)	1	300 ft.	64
M7	24-hour Continuous Monitor	--	--	200 ft.	45-69

Source: AECOM, May 2014.

[11] These values are consistent with the FHWA's requirement for consideration of traffic noise impacts 1dBA below their noise abatement criteria

[12] Estimated dwelling units include only first and second row residences

Figure 3-11. Noise-Monitoring Sites for the Jimmie Davis Bridge

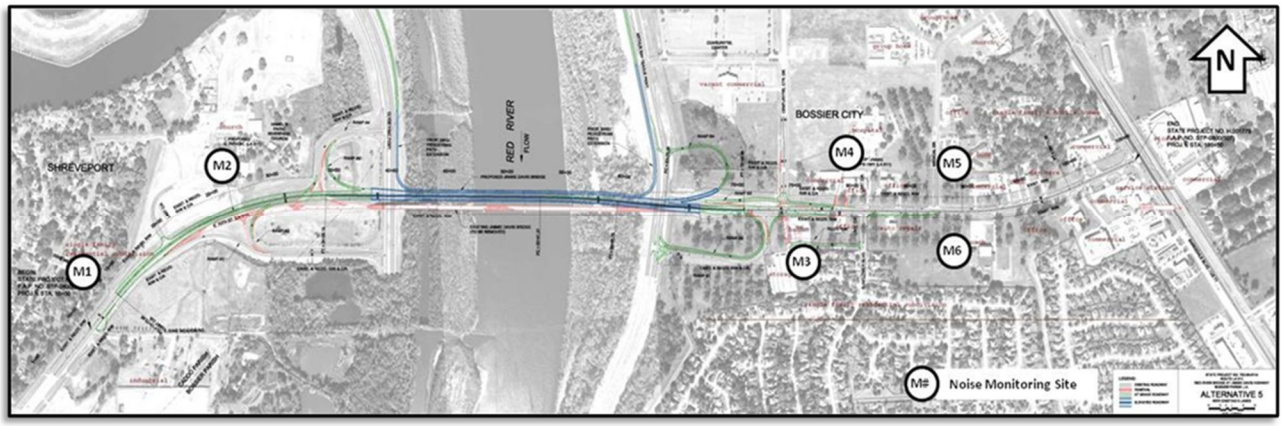

Table 3-19 Comparison of Measured and Predicted Noise levels (in dBA)

Site ID	Receptor Description	FHWA Category	Measured	Predicted	Difference	Notes
M1	Residences, Dixie Loop Road	B	72	71	-1	Validates well
M2	Riverpark Church	C	65	63	-2	Validates well
M3	Residences, Cairo Court	B	64	59	-5	Does not validate[1]
M4	Cornerstone Hospital	C	61	61	0	Validates well
M5	Residences, Group Home	B	59	54	-5	Does not validate[1]
M6	Barksdale Baptist Church	C	64	62	-2	Validates well

1 Affected by other ambient sources present during monitoring period.
Source: AECOM, February 2014.

3.20.3 No-Build Alternative

Without the project, future traffic noise levels under the No-Build Alternative should be similar to those under the existing conditions. The area in the vicinity of the proposed new bridge and roadway improvements is characterized as a mixture of residential, commercial and retail land-uses. The No-Build Condition would not cause any new noise impacts.

For modeling purposes and to assess the potential for impact in accordance with the DOTD relative increase criterion of 10 dBA, the noise levels under the Existing and No Build Conditions were predicted using the same modeling approach as described for the Build Alternatives. However, the prediction model reflects the existing unmodified roadways similar to what was used for the validation exercise. This also was done for the No-Build Alternative to demonstrate the acoustical effects of the traffic growth and the negligible differences between the future No-Build and Build Alternatives. As a result, the predicted noise levels for the Existing Condition and the No Build Alternatives shown in Table 3-20 are different than what was actually measured during the noise monitoring program.

3.20.4 Build Alternative

Based on the results of the validation exercise described in Section 3.20.2 the FHWA TNM prediction model was modified to reflect future traffic conditions under the Build Alternatives in the Design Year 2036. To be conservative, the prediction methodology utilized maximum peak-hour traffic volumes with average free flow travel speed of 55 miles per hour (mph) for Jimmie Davis

Highway and 35 mph for all arterials and ramps. Due to the surrounding vegetation and future graded areas surrounding the roadway, acoustically absorptive ground effects typical of lawn were utilized to determine the ground-attenuation effects between the source and receivers. The vehicle mix utilized in the prediction modeling analyses reflects predicted traffic conditions based on data provided by DOTD. Average vehicle mix percentages were estimated based on typical truck fractions including: 96 percent for passenger cars, 2 percent for medium trucks (vehicles with six wheels and two axles), and 2 percent for heavy trucks (vehicles with three or more axles).

As shown in Table 3-20, peak-hour noise levels [L_{eq}(h)] under the 2036 Build Alternatives are predicted to range from 53 dBA at Site OU11 (measurement Site M4, Cornerstone Hospital) to 59 dBA at Sites OU5 (Measurement Site M2, Riverpark Church) and Site OU16 (Measurement Site M6, the Barksdale Baptist Church). Therefore, the future traffic noise levels under the Build Alternatives are not predicted to exceed the DOTD noise abatement criterion of 66 dBA. Similarly, none of the future traffic noise levels under the Build Alternatives are predicted to exceed the DOTD relative increase criterion of 10 dBA either.

Noise levels from construction activities within the project study area are discussed in Section 3.24.

Table 3-20. Predicted Peak Hour Leq Noise Levels under the No-Build and Build Alternatives (dBA)

ID	Description	FHWA Category	2013 Existing Condition	2036 Predicted Future			Exceed Criteria
				No-Build	Alternative 5	Alternative 7	
R7	Residences, Dixie Loop Road	B	47	49	58	58	No
OU5	Riverpark Church	C	54	57	59	59	No
R17	Residences, Cairo Court	B	54	57	58	58	No
OU11	Cornerstone Hospital	C	50	52	53	53	No
OU13	Residences, Group Home	B	52	53	54	54	No
OU16	Barksdale Baptist Church	C	54	57	59	59	No

Source: AECOM, May 2014.

3.20.5 Avoidance, Minimization, and Mitigation

As shown in Table 3-20, maximum hourly noise levels under the proposed Build Alternatives in 2036 are not predicted to exceed or approach the DOTD noise abatement criterion of 66 dBA at any of the noise-sensitive receptors within the study area. Therefore, no mitigation measures such as noise barriers are required.

Avoidance, minimization, and mitigation measures to abate construction noise are discussed in Section 3.24.

3.21 Potentially Contaminated Materials Sites

A Phase I Environmental Site Assessment (ESA) was performed in general conformance with the scope and limitations of ASTM Practice E 1527-05 and 40 CFR 312 “This assessment has revealed no “recognized environmental conditions” in connection with the proposed project area. A separate technical report titled *Phase 1 Environmental Site Assessment, Red River Bridge at Jimmie Davis Highway, Route LA 511, Bossier and Caddo*

Parishes was prepared in support of this project, and a pdf copy of the document is provided on the enclosed CD.

3.21.1 No-Build Alternative

The No-Build Alternative would have no effect on potentially contaminated materials sites.

3.21.2 Build Alternatives

The Build Alternatives are not anticipated to affect any potentially contaminated materials sites because no "recognized environmental conditions" were identified in connection with the proposed project corridor.

3.21.3 Avoidance, Minimization, and Mitigation

No measures are required for avoidance, minimization, or mitigation.

3.22 Agricultural Resources

As required by Section 1541(b) of the *Farmland Protection Policy Act of 1981 and 1994*, federal and state agencies, as well as projects funded with federal funds, are required to (a) use the criteria to identify and take into account the adverse effects of their programs on the preservation of farmland, (b) consider alternative actions, as appropriate, that could lessen adverse effects, and (c) ensure that their programs, to the extent practicable, are compatible with state and units of local government and private programs and policies to protect farmland.

Prime farmland soils, as defined by the USDA, are soils that are best suited to producing food, feed, forage, fiber, and oilseed crops. Such soils have properties that are favorable for the economic production of sustained high yields of crops.

Consultation with the NRCS was initiated via letter dated August 23, 2013. A response letter dated September 5, 3013 was received from the NRCS stating, "*The project map submitted with your request indicates that the proposed construction areas will not impact prime farmland and therefore is exempt from the rules and regulations of the Farmland Protection Policy Act (FPPA)-Subtitle I of Title XV, Section 1539-1549. Furthermore, we do not predict impacts to NRCS work in the vicinity*". A copy of this letter is included in Appendix B.

3.22.1 No-Build Alternative

The No-Build Alternative would have no effect no on prime farmlands.

3.22.2 Build Alternatives

The Build Alternative would have no effect on prime farmlands because none exist within the project area.

3.22.3 Avoidance, Minimization, and Mitigation

No measures are required for avoidance, minimization, or mitigation.

3.23 Coastal Zone

The U.S. Congress enacted the *Coastal Zone Management Act of 1972*, as amended, to protect the coastal environment from growing demands associated with residential, recreational, commercial, and industrial uses (e.g., state and federal offshore oil and gas

development). Provisions of the Act help states develop coastal management programs to manage and balance competing uses of the coastal zone. In Louisiana, the Louisiana Department of Natural Resources (LDNR) is the agency responsible for regulating coastal use and development. Neither Caddo nor Bossier Parishes are located within the Louisiana Coastal Zone.

3.23.1 No-Build Alternative

The No-Build Alternate would have no effect on the Louisiana Coastal Zone.

3.23.2 Build Alternatives

The Build Alternatives would have no effect on the Louisiana Coastal Zone

3.23.3 Avoidance, Minimization, and Mitigation

No measures are required for avoidance, minimization, or mitigation.

3.24 Construction Impacts

Construction sequencing, traffic maintenance criteria, and plans would be developed as part of the final design to coordinate construction activities and ensure continued access between all affected roadways. Needs for special considerations would be identified and addressed during final design.

3.24.1 No-Build Alternative

There would be no construction impacts under the No-Build Alternative except for those resulting from other programmed projects. These impacts would be addressed by the sponsors of those projects.

3.24.2 Build Alternatives

The Build Alternatives would be expected to have the following typical impacts experienced during roadway and bridge construction.

Air

Direct emissions from construction equipment are not expected to produce adverse effects on local air quality provided that all equipment is properly operated and maintained. If required, traffic management techniques are available during the construction period that would mitigate increased emissions from traffic congestion due to lane closures, detours, and construction vehicles accessing sites.

Noise

Noise levels from construction activities within the project study area, although temporary, could be a nuisance at nearby sensitive receptors such as residences and schools. Noise levels during construction are difficult to predict and vary depending on the types of construction activity and the types of equipment used for each stage of work. Heavy machinery, the major source of noise in construction, is constantly moving in unpredictable patterns and is not usually at one location very long. Project construction activities can include bridge and ramp construction, relocating utilities, and roadway grading. Since heavy-duty impulsive equipment, such as pile drivers, may be utilized by the selected contractor as part of the construction activities, noise control measures

(such as vibratory pile drivers or pre-auguring) may be required during construction to mitigate temporary impacts in the community.

Water Quality

Impacts to water quality are possible during and after construction. Erosion during construction of the proposed roadway can contribute sediment and silt to runoff waters, resulting in deteriorated water quality. Surface water runoff during construction could increase turbidity, lower dissolved oxygen, and increase biological oxygen demand in receiving waterbodies. Heavy metals, oils, other toxic substances, and debris from construction traffic and spillage can be absorbed by soil at construction sites and carried with runoff water.

Maintenance of Traffic

For construction of both Alternatives 5 and 7, temporary closures to Clyde Fant Parkway and Arthur Ray Teague Parkway would be required to place the girders above the roadway. In addition, the ramps to and from Clyde Fant Parkway on the north side of LA 511 would be closed to tie the ramps into the new westbound roadway. Modifications at each end of the bridge approaches will be required to tie the new westbound roadway into the existing roadway.

If Access Build Alternative A is selected, no closures are expected along Jimmie Davis Highway. If Access Build Alternative B is selected, utilities (water, drainage, and electric) may require relocation outside the limits of the roadway. In addition, access to businesses along Jimmie Davis Highway would have to be maintained during construction.

Navigation

Construction of either of the Bridge Build Alternatives would potentially affect traffic on the Red River.

3.24.3 Avoidance, Minimization, and Mitigation

Air

Air quality impacts due to temporary construction activities are possible particularly on dry and windy days. Mitigation techniques could include development of site-specific traffic management plans; temporary signage and other traffic controls; designated staging areas, worker parking lots (with shuttle bus service if necessary), and truck routes; and prohibition of construction vehicle travel during peak traffic periods.

Potential fugitive dust impacts would be mitigated through good "housekeeping" practices such as water sprays during demolition; wetting, paving, or landscaping exposed earth areas; covering dust-producing materials during transport; limiting dust-producing construction activities during high wind conditions; and providing street sweeping and tire washes for trucks leaving the site.

Noise

The DOTD is committed to abatement of construction noise at the noise-sensitive locations along the proposed project corridor. In general, the selected contractor would need to demonstrate compliance with the DOTD *Highway*

Traffic Noise Policy as well as any local noise ordinances regarding temporary construction activities.

To reduce temporary construction noise impacts that may result, several "good housekeeping" practices are recommended. The selected contractor would be required to comply with the DOTD *Highway Traffic Noise Policy* regarding allowable construction periods and activities. Additionally, several noise control measures are available to minimize the noise impacts in the community and could be incorporated into the construction process including the following:

- Establish equipment and material staging areas away from sensitive receptors;
- Whenever possible, conduct all construction activities during the daytime period to minimize any potential sleep disturbances;
- Substitute louder equipment to minimize nuisance noise in the community; and,
- Adequately notify the public of construction operations and schedules. Methods such as construction-alert publications could be used to handle complaints quickly.

Water Quality

Runoff control measures can be installed at the time of construction to reduce runoff pollution both during and after construction. Such measures can effectively limit the entry of pollutants into surface waters and protect their quality, fish habitats, and public health. These control measures are termed Best Management Practices (BMPs). With the proper use of BMPs, impacts to water quality from the Build Alternate would be short-term and minimal.

Maintenance of Traffic

A Maintenance of Traffic plan will be prepared during final design.

Navigation

If a Bridge Build Alternative is selected as the Preferred Alternative, DOTD will coordinate with the USCG to reduce impacts on navigation in the Red River. Measures to mitigate impacts will be included in the bridge permit requirements as approved by the USCG.

3.25 Indirect and Cumulative Impacts

Indirect impacts are "caused by the action and are later in time or farther removed in distance, but still reasonably foreseeable. Indirect effects may include growth inducing effects and other effects related to induced changes in patterns of land use, population density or growth rate, and related effects on air and water and other natural systems, including ecosystems (40 CFR 1508.8).

Cumulative impact is defined as "the impact on the environment which results from the incremental impact of the action when added to other past, present and reasonably foreseeable future actions regardless of what agency (federal or non-federal) or person undertakes such other actions. Cumulative impacts can result from individually minor but collectively significant actions taking place over a period of time" (40 CFR 1508.7).

3.25.1 No-Build Alternatives

Indirect

The No-Build Alternatives would have no impact on the potential for inducing changes in patterns of land use, population density, or growth rate. When compared with the Build Alternatives, the No-Build Alternative would result in increased congestion. This may result in localized impacts to businesses and residences and slow the rate of the development of vacant land.

Cumulative

The No-Build Alternative would have no incremental impact with respect to cumulative effects of past, current, and future projects on most environmental resources. However, expected degradation in intersection levels of service (LOS) along Jimmie Davis Highway in the design year may adversely affect localized air quality due to increased emissions from vehicle queuing and delays. Excess emissions resulting from congestion and idling at these locations would increase localized levels of carbon monoxide, volatile organic compounds, and nitrogen oxides, although no predicted emissions levels would exceed ambient air quality standards.

3.25.2 Build Alternative

Indirect

The Build Alternative would not change the general pattern of development in the project area as the pattern results from the local economy that drives the market demands for industrial growth, additional housing, commercial services, and community facilities to meet the needs of an increasing population.

Because the wetlands impacts are contained entirely within the transportation right-of-way of LA 511 on the flood side of the levee protection of the Red River, the effects on these resources would not encourage adjacent development into adjacent wetland areas. The floodplains within the project area are already crossed by the existing highway and would not be impacted by further by the project. The minor impacts to vegetated areas and wildlife are temporary or restricted to the wetland areas and, as with the wetlands, would not contribute to impacts in adjacent areas.

Cumulative

This impact analysis determined that the project, in the context of other transportation and development projects, would have the potential to result in an incremental impact to water quality during construction. Access Build Alternative C directly would have an incremental adverse impact through the addition of increased impervious surfaces. Also, completion of the project, which would be expected to increase the rate of development in the area, would indirectly increase the quantity of impervious surfaces.

3.25.3 Avoidance, Minimization, and Mitigation

Indirect impacts may result from the location of business and residences in proximity to the new roadway. Mitigation associated with indirect impact will be undertaken by local, state, and federal agencies in association with the permitting of that construction.

Mitigation associated with floodplains will be controlled by City and Parish ordinances.

Best management practices will be accomplished through the Louisiana Discharge Elimination System (LPDES) Storm Water General Permit for Construction process.

Efforts to avoid or minimize cumulative impacts have been undertaken and will be re-examined during final design to reduce the potential for cumulative impacts.

3.26 Permits and Approvals

No-Build Alternative, Cooperative Endeavor Agreements, Permits and Approvals

The No-Build Alternative would involve no activities requiring acquisition of cooperative endeavor agreements, permits and approvals.

Build Alternatives, Cooperative Endeavor Agreements

Implementation of the Preferred Alternative, as defined in Section 2.7 would require Cooperative Endeavor Agreements, or other binding agreements, to be executed by DOTD and the local jurisdictions. These agreements will transfer all maintenance and liability responsibilities in perpetuity to the local jurisdictions for both the elevated and at-grade segments of the trails from the points, on each side of the river, at which the trail physically separates from the roadway bridge to the points at which they join the existing trails. If agreement is not reached timely, Trail 2 will be constructed.

Build Alternatives, Permits and Approvals

Implementation of the Build Alternatives would likely require the following permits and approvals:

United States Army Corps of Engineers (USACE)

Impacts to jurisdictional wetlands were identified in Section 3.12. If USACE takes jurisdiction over these affected wetlands, permits and certifications would be required for unavoidable impacts. Specifically, any dredge or fill activity that would impact jurisdictional wetlands, directly or indirectly, would require a Section 404 permit through Section 404 of the CWA.

As reported in Section 3.12 of this Draft EA, Bridge Build Alternative 5 would impact 2.65 acres of wetlands and 1.81 acres of the Waters of the U.S. while Bridge Build Alternative 7 would impact 1.66 acres of wetlands and 1.04 acres of the Waters of the U.S.

The USACE Vicksburg District would be contacted to acquire the necessary permits and mitigation. Section 404(b)(1) guidelines require compensatory mitigation to offset waters and wetland impacts. Mitigation credits would be obtained from a USACE Vicksburg District approved mitigation bank.

The USACE also administers Section 10 of the *River and Harbors Appropriations Act of 1899*, which controls construction activities in navigable waters of the U.S. The Act would apply primarily to the Red River navigation channel. Any work in the Red River would trigger Section 10, which generally allows only the absolute minimum of temporary obstruction to the navigable channel and requires that there be no permanent impacts to the channel. Construction activities in the Red River would require a Section 10 permit.

United States Coast Guard (USCG) Bridge Permit

A USCG Bridge Permit is required for the construction of a bridge across a navigable waterway in accordance Section 9 of the Rivers and Harbors Act of 1899 and the General Bridge Act of 1946.

State of Louisiana Department of Environmental Quality (LDEQ)

Should the USACE take jurisdiction over areas of wetlands in areas impacted by the project, commensurate with the USACE permitting, a Water Quality Certification would be required under the authority contained in the Louisiana Revised Statutes of 1950, Title 30, Chapter 11, Part IV, Section 2074 A(3) and provisions of Section 401 of the Clean Water Act (PL 95 217).

LDEQ Section 401 Water Quality Certification

Under the provisions of the CWA Section 401, any project that involves placing dredged or fill material in waters of the U.S. or wetlands or mechanized clearing of wetlands requires a water quality certification. The LDEQ has been delegated authority for issuance of the water quality certification. The water quality certification would be obtained in conjunction with the USACE Section 404 permit process. The LDEQ will be contacted and the necessary permits acquired prior to the initiation of any activities.

LDEQ also regulates the discharge of storm water from constructions sites as defined in the Louisiana Administrative Code (LAC) (LAC 33IX.2511.B.14.j) A Louisiana Discharge Elimination System (LPDES) Storm Water General Permit for Construction Activities is required if the disturbance is greater than one acre.

Under the requirements of NPDES and LPDES for construction sites greater than 5 acres (Phase I), a storm water discharge permit will be required (LAR100000 – AI83363). As a part of the LPDES storm water discharge permitting process, the contractor responsible for construction is required to implement and maintain BMPs to reduce and/or eliminate any potential impacts to surface water quality in the immediate area due to discharges associated with construction activities to adhere to an erosion and sediment control plan.

City of Shreveport/Caddo Parish

Regarding floodplain impacts, for that portion of the route located within the City of Shreveport, a letter of “No Objection" will be requested for the proposed project under the authority of city ordinances.

City of Bossier City/Bossier Parish

Regarding floodplain impacts, for that portion of the route located within the City of Bossier City, a letter of “No Objection" will be requested for the proposed project under the authority of city ordinances.

THIS PAGE INTENTIONALLY LEFT BLANK

4.0

COMMENTS AND COORDINATION

PLACEHOLDER

4.0 Comments and Coordination

This chapter contains a summary of agency coordination and the public involvement outreach process.

4.1 Solicitation of Views

Early coordination was initiated with a Solicitation of Views (SOV) packet during the initial planning stage of the project. The SOV packet was mailed June 17, 2013 to applicable federal, state and local agencies, organizations, individuals, Indian tribal contacts, and elected officials in the project area. The packet included a letter, preliminary project description, and project location map. The SOV letter requested identification of possible adverse economic, social, or environmental effects or concerns. Copies of the SOV packet and SOV responses are included in Appendix B. Table 4-1 summarizes the responses to the SOV packet by the agencies.

Table 4-1. Summary of Solicitation of Views Responses

Date	Responder	Comment Summary
June 17, 2013	USFWS	Adverse effect on resources unlikely
June 19 and September 5, 2013	NRCS	No Impact to prime farmland
June 20, 2013	City Engineer, Bossier City	No adverse effects
June 20, 2013	Bossier Parish Sheriff	No adverse effects on law enforcement
June 24, 2013	Sen. Peacock	Requests prompt implementation of four-lane crossing and trail
June 24, 2013	USEPA	No sole source aquifer in vicinity
June 27 and August 8, 2013	LDWF	No adverse effects anticipated, but notes presence of Interior Least Tern and Pallid Sturgeon in vicinity
June 28, 2013	USACE	No effect on activities; notice of permit requirements
June 28, 2013	FAA	Notice of requirements if any structures exceed existing height
July 1, 2013	SHPO	Requests additional information regarding APE
July 10, 2013	DOTD Public Works and Water Resources	No flood control program in vicinity
July 10, 2013	LDHH	No objection
July 11, 2013	LDNR	Notice of registered water wells in vicinity; no oil or gas wells
July 25, 2013	LDEQ	No objection
December 27, 2013	Choctaw Nation	No objection; requests that specifications call for stop work if cultural material is encountered

4.2 Agency Coordination

Solicitation of Views letters were distributed at the initiation of the project. The letter and the responses are found in Appendix B. An Agency Coordination Meeting was held at 10:00 AM on Thursday, August 15, 2013 at the Shreveport Chamber of Commerce. Representatives of federal, state, and local agencies with an interest in the project, local elected officials, and members of the Louisiana Legislature representing the Shreveport / Bossier City area were invited by letter in advance and sent e-mail reminders closer to the meeting date. The meeting was attended by 40 agency representatives and elected officials. Notes on the proceedings at the meeting are found in Appendix C. No required agency coordination is outstanding, and no reports due to agencies are incomplete.

4.3 Public Involvement

Public Meeting

An open house public involvement meeting to discuss the proposed alternatives for the Red River Bridge at Jimmie Davis Highway (LA 511) was held from 6:00 to 8:00 PM on Thursday, August 15, 2013 at the Barksdale Baptist Church, 1714 Jimmie Davis Highway, Bossier City. The purpose of the Public Meeting was to allow agencies, local representatives, and the public to review and comment on the No-Build and Build Alternatives that were being proposed in the development of an Environmental Assessment for the project. The open house style meeting, with no formal presentation, allowed citizens the opportunity to receive information about the environmental process of the project, to view exhibits, ask questions, and offer comments during the scheduled hours.

The methods of notification for the Public Meeting included placing a legal notice in the *Bossier Press-Tribune* on July 31 and August 14, 2013, and the *Shreveport Times* on July 31, August 2, and August 4, 2013, and issuance of a press release that earned both print and electronic media attention.

The public meeting drew 224 attendees. A total of 102 comment communications were received including 8 verbal comments recorded by a court reporter at the meeting, 73 written comments that were submitted at the meeting, and 21 comments received by e-mail.

The comment made by 31 individuals, the largest number for a single comment, was “Need new 4-lane bridge” followed closely by 26 comments saying “Crossing must be improved as soon as possible”. Of the four Stage 0 Alternatives presented, Table 4-2 summarizes the comments received. A complete record of the meeting, including the comments received and a Table presenting a Summary of Comments and Responses, is found in Appendix C.

Table 4-2. Summary of Comments on Stage 0 Alternatives

Stage 0 Alternative	In Favor	Opposed
Alternative 4	6	1
Alternative 5	8	1
Alternative 5A	7	4
Alternative 6	10	0

After a review of the comments, Alternative 4 and Alternative 6 were eliminated from consideration, and Alternative 5A was revised to incorporate the interchange alignment found in Alternative 5. It was then redesignated Alternative 7. Alternative 5 and Alternative 7 were evaluated in this EA. Other refinements of the Build Alternatives that directly responded to comments received are as follows:

- Alternative C was developed partly in response to the comment from the owner of Carpet One, the business at 1609 Jimmie Davis Highway, who was concerned that Alternatives A and B would eliminate access to Jimmie Davis Highway and result in an adverse impact to his business and partly in response to the comments from those recommending the closure of the intersection of Jimmie Davis Highway with CenturyLink Center Drive/Zach Avenue, and
- Lighting on the bridge has been included in response to comments by the public.

4.4 Public Hearing

An open forum Public Hearing to present the Draft Environmental Assessment (EA) for the Red River Bridge at Jimmie Davis Highway (LA 511) was held on Thursday, May 14, 2015.

at the Barksdale Baptist Church, 1714 Jimmie Davis Highway, Bossier City, Louisiana from 5:00 p.m. to 7:00 p.m.

The purpose of the hearing was to provide an opportunity for citizens to view displays, to ask questions, and to offer comments about the alternatives for this project. The alternatives presented included, in addition to the No Build Alternative, two Trail Build Alternatives and three Access Build Alternatives. Although two Bridge Build Alternatives were evaluated in this EA, Bridge Alternative 5, which proposed a new four-lane bridge, had been eliminated from consideration because it was not a feasible action as a result of the on-going project to rehabilitate the existing bridge. This is discussed in greater detail in Chapter 2.0 of this EA.

Two legal advertisements were placed in the *Shreveport Times* and appeared in the circulations dated April 12 and May 13, 2015. Two legal advertisements also were placed in the *Bossier Press-Tribune* and appeared in the circulations dated April 15 and May 13, 2015. Earned media prior to the Hearing included articles in the Shreveport Times on April 17 and May 11, 2015, and reports on KTAL on May 11, 2015, and on KSLA in the morning of May 14, 2015.

Notices of the Hearing were mailed to 264 stakeholders on April 27, 2015. On May 7, 2015, reminders were sent electronically to the 212 stakeholders that had provided their electronic addresses and to the local, state, and federal agency representatives and elected officials that were invited to the Agency Meeting on August 15, 2013. Information about the hearing also was included in the letters that accompanied the distribution of the Draft EA document on April 7, 2015.

The sign in sheets indicate that 112 citizens attended the Hearing, including a member of the NLCOG staff and Senator Barrow Peacock who was the only attendee that identified himself as an elected official. Seven members of the DOTD project team and the DOTD District 04 staff and seven members of the consultant team were present to host the hearing.

Several information displays were available for review and comment by the public. A Public Hearing handout and a comment form were presented to the attendees as they entered the meeting room, with extra copies available for attendees to share with other members of their community. Two video presentations were available for viewing on monitors. One presentation provided citizens with an overview of the project including both the alternatives and the environmental findings. The other presentation provided the simulation of traffic in 2036 for both the No Build Alternative and for one of the potential combinations of Build Alternatives, Bridge 7, Trail 1, and Access B. Attendees were encouraged to view the presentation, to circulate among the displays, and to participate in discussions concerning the alternatives. The DOTD and consultant staff members were available to assist in describing the alternatives and to answer questions.

Comments were collected from attendees at the Hearing and received by mail until May 25, 2015. A total of 52 comment communications were received. These included three recorded by a court reporter at the Hearing, 25 written and submitted at the Hearing, and 24 received by electronic mail. One of the comment communications submitted at the Hearing included the commenter's name, but made no comment.

These 52 communications contained 42 subjects for a total of 101 comments including the communication with no comment. The comment made by the largest number of individuals, 16, was "Prefers Trail Alternative 1". Only one comment was received from an agency in which the US Fish and Wildlife Service stated that they had no further comment.

Preferences regarding the Build Alternatives can be summarized as follows:

Trail Alternative 1 – 16 for, 0 against
Trail Alternative 2 – 4 for, 1 against
A trail with no preference expressed – 6 for, 1 against
Access Alternative A – 8 for, 0 against
Access Alternative B – 12 for, 2 against
Access Alternative C – 11 for, 5 against

In addition, eight comments were received that applied solely to the Rehabilitation Project and another that applied to both projects.

A complete synopsis of the Hearing is located in a separate document *Red River Bridge at Jimmie Davis Highway, Public Hearing Record*, which presents the comments as follows:

- Copies of all communications received from the public, elected officials, and agencies;
- Tables that cross-reference the communications and comments to responses:
  - Table 1 cross-references the comments to the responses; and
  - Table 2 cross-references the responses to the comments.
- The responses to the comments.

Each communication has been assigned a unique numeric identification number from 1 to 52 and each response also has been assigned a unique numeric identification number from 1 to 42. The copies of the communications indicate the both the communication identification number and the identification numbers of any comment in the communication. The responses are presented in the order of their identification numbers.

4.5 Document Distribution

The distribution list of recipients of the Draft EA and of the Final EA /FONSI is included in **Table 4-3**. The distribution list includes federal, state, and local agencies, elected officials, study area libraries, and stakeholders.

Table 4-3 Distribution List

ID #	Recipient	Address	Contact	No. of Documents
Lead Agencies				
1	Louisiana Department of Transportation and Development	1201 Capitol Access Road Section 28 Room 504C Baton Rouge, LA 70802 P.O. Box 94245 Baton Rouge, LA 70804-9245	Mr. Ezekiel Onyegbunam	10 & 1 CD
2	District 02 Administrator, Louisiana Department of Transportation and Development	3339 Industrial Drive Bossier City, LA 71112	Mr. David North	5 & 1 CD
3	Federal Highway Administration	5304 Flanders Drive No. A Baton Rouge, LA 70808	Mr. Robert Mahoney and Ms. Lismary Gavillan	2

ID #	Recipient	Address	Contact	No. of Documents
Federal Agencies				
4	US Army Corps of Engineers Vicksburg District Programs and Project Management Division	4155 Clay Street Vicksburg, MS 39183	Ms. Patricia Hemphill	1
5	US Environmental Protection Agency	1445 Ross Avenue, Suite 1200 Dallas TX 75202	Mr. Michael Bechdol	1
6	US Fish and Wildlife Service, Lafayette Ecological Service Field Office	646 Cajundome Blvd, Suite 400 Lafayette, LA 70506	Mr. James F. Boggs	1
7	8th Coast Guard District	Hale Boggs federal Building 500 Poydras Street, Suite 1324 New Orleans, LA 70130	Commander	1
Louisiana State Agencies				
8	Louisiana Department of Wildlife & Fisheries,	2000 Quail Drive Baton Rouge, LA 70808	Ms. Amity Bass	1
9	State Historic Preservation Officer	Capitol Annex Building 1051 North Third Street, Room 405 Baton Rouge, LA 70802	Ms. Pam Breaux	1
10	Louisiana Department of Environmental Quality	Galvez Building 602 North Fifth Street Baton Rouge, LA 70802	Ms. Beth Dixon	1
11	Choctaw Nation of Oklahoma	P.O. Box 1210 Durant, OK 74701	Ms. Johnnie Jacobs NHPA Section 106 Coordinator Historic Preservation Department	1
State Elected Officials				
12	LA House of Representatives (District 6)	5916 Fairfields Avenue Shreveport, LA 71106	Honorable Thomas Carmody, Jr.	1
13	LA House of Representatives (District 9)	954 Highway 80, Suite 400 Haughton, LA 71037	Honorable Henry L. Burns	1
14	Senate of Louisiana (District 37)	1619 Jimmie Davis Highway Bossier City, LA 71112	Honorable Barrow Peacock	1
Local Officials				
15	Mayor of Bossier City	620 Benton Road Bossier City, LA 71171	Hon. Lorenz Walker	1
16	Mayor of Shreveport	505 Travis Street, Suite 200 Shreveport, LA 71101	Hon. Ollie S. Tyler	1
17	Bossier City Council	620 Benton Road Bossier City, LA 71171	Ms. Phyllis McGraw	1
18	Shreveport City Hall	505 Travis Street, Suite 300 Shreveport, LA 71101	Mr. Robert Westerman	1
19	Northwest Louisiana Council of Governments	625 Texas Street, Suite 200 Shreveport, LA 71104	Mr. Kent Rogers	1
20	Shreveport Public Assembly and Recreation	505 Travis Street, Suite 560 Shreveport, LA 71101	Mr. Tim Wachtel	1

ID #	Recipient	Address	Contact	No. of Documents
21	Red River Waterway Commission	5941 Highway 1 By-Pass Natchitoches, LA 71458	Mr. Colin Brown	1
22	Bossier Parish School Board	316 N. Sibley Street Benton, LA 71006	Superintendent's Office	1
Libraries				
23	Louisiana State Library	Recorder of State Documents 701 North 4th Street Baton Rouge, LA 70802	Ms. Karen Cook	20
24	Aulds Library	3950 Wayne Avenue Bossier City, LA 71112	Librarian	1
25	Shreve Memorial Library Broadmoor Branch	1212 Captain Shreve Drive Shreveport LA 71105	Librarian	1
Total Copies				**58 & 2 CDs**

5.0

Draft Section 4(f) Evaluation

LOUISIANA DEPARTMENT OF
TRANSPORTATION & DEVELOPMENT

5.0 Section 4(f) Evaluation

This Section 4(f) Evaluation has been prepared in accordance with Section 4(f) of the USDOT Act of 1966 (49 USC 303). It identifies properties protected by Section 4(f) in the project area, evaluates the use of these properties by the Preferred Alternative, and presents documentation required for the FHWA to approve the use of Section 4(f) properties. FHWA will make its Section 4(f) determination as part of its Finding of No Significant Impact for the project, after its consideration of public and agency comments on this Draft Section 4(f) Evaluation.

Pursuant to 23 CFR 774.5(b) (2), all potential impacts are being presented for public review and comment with the Environmental Assessment. The 30-day comment period for the Environmental Assessment also applies to comments on this Draft Section 4(f) Evaluation.

5.1 Methodology

Section 4(f) of the US Department of Transportation Act of 1966, 49 USC 303(c) is a federal law that protects publicly owned parks, recreation areas, wildlife and/or waterfowl refuges, as well as significant historic sites, whether publicly or privately owned (collectively, "Section 4(f) resources"). Section 4(f) requirements apply to all transportation projects that require funding or other approvals by the USDOT. As a USDOT agency, FHWA must comply with Section 4(f). FHWA's Section 4(f) regulations are at 23 CFR Part 774. FHWA also considers the guidance provided in FHWA's Section 4(f) Policy Paper (July 20, 2012).

Under Section 4(f), FHWA cannot approve a transportation project that uses a Section 4(f) property unless FHWA determines that:

- There is no feasible and prudent avoidance alternative to the use of land from the Section 4(f) property, and the action includes all possible planning to minimize harm to the property resulting from such use (23 CFR 774.3(a)); or
- The use of the Section 4(f) property would have a *de minimis* impact on the property (23 CFR 774.3(b)). In determining whether an impact is *de minimis*, FHWA must consider all avoidance, minimization, mitigation, or enhancements measures that are incorporated into the project.
  This Draft Section 4(f) Evaluation was conducted according to the requirements of 23 CFR 774 and FHWA's Section 4(f) Policy Paper. The evaluation included the following steps:
  - **Identification of Section 4(f) Properties—**Using a 500-foot wide project area centered on the Preferred Alternative mainline roadway and on the shared use trail, the DOTD reviewed existing mapping, conducted field investigations/site reconnaissance, searched property records and consulted with jurisdictional officials to identify the properties protected by Section 4(f). Public ownership, public access, significance, and funding of parks and recreational facilities were verified through coordination with the property owners.
  - **Assessment of Potential Section 4(f) Uses—**The FHWA and DOTD identified and quantified potential uses of Section 4(f) properties by the Preferred Alternative. This assessment considered the potential for permanent use (23 CFR 774.17), constructive use (23 CFR 774.15), and temporary use (23 CFR 774.13(d)).
  - **Temporary Occupancy Exceptions—**In evaluating potential uses, the FHWA and DOTD considered the exception for temporary occupancies in 23 CFR 774.13(d).
  - ***De minimis* Impacts—**For properties that would be used, the FHWA and DOTD evaluated the use to determine whether it would have a *de minimis* impact. The FHWA and DOTD have notified the officials with jurisdiction of each property for

which they are proposing a finding of *de minimis* impact. Should the official with jurisdiction concur, the FHWA will issue a finding of *de minimis* impact as part of the Final Section 4(f) Evaluation.

- **Analysis of Avoidance, Minimization, and Least Overall Harm—**For properties that would be used by the Preferred Alternative, and for which a finding of *de minimis* impact is not proposed, the FHWA and DOTD have conducted an analysis to determine if there are feasible and prudent alternatives that avoid the use of Section 4(f) resources. In the absence of feasible and prudent avoidance alternatives, the FHWA and DOTD compared the alternatives to determine which alternative caused the least overall harm and to ensure that the Preferred Alternative incorporates all possible planning to minimize harm as required by Section 4(f).

5.1.1 Definition of Section 4(f) Uses

After identifying the Section 4(f) properties in the project area, the FHWA determined whether and to what extent the Preferred Alternative would use each property. The type of Section 4(f) use was then determined according to the Section 4(f) use definitions below.

- **Permanent Use—**As set forth in 23 CFR 774.17, a permanent use occurs when land from a Section 4(f) property is permanently incorporated into a transportation project. This may occur as a result of partial or full acquisition of the Section 4(f) property, permanent easements, or temporary easements that exceed regulatory limits.
- **Temporary Use—**As set forth in 23 CFR 771.17, a temporary use occurs when there is a temporary occupancy of land that is "adverse in terms of the statute's preservation purpose as determined by the criteria in § 774.13(d)." If the criteria in Section 774.13(d) are met, it qualifies for the exception for temporary occupancies. When the exception applies, there is no "use" of the Section 4(f) property.
- **Constructive Use—**As defined in 23 CFR 774.15(a), a constructive use occurs when a transportation project does not incorporate land from a Section 4(f) property, but the project's proximity impacts are so severe that the protected activities, features, or attributes that qualify a property for protection under Section 4(f) are substantially impaired.

5.1.2 Individual Section 4(f) Evaluation

The term "individual Section 4(f) evaluation" is used in this chapter to refer to the assessment consisting of assessing avoidance alternatives, determining the alternative with the least overall harm, and considering all possible planning to minimize harm. This analysis is required if the Preferred Alternative would use a Section 4(f) resource, and the use is not *de minimis* (in other words, a "non-*de minimis* use"). The steps in this analysis are described below:

- **Avoidance Alternatives—**The FHWA considered alternatives that completely avoided the use of a Section 4(f) property. The avoidance analysis applied the Section 4(f) feasible and prudent criteria (23 CFR 774.17). An avoidance alternative was considered infeasible if it cannot be built as a matter of sound engineering judgment. An avoidance alternative was not considered prudent if it (1) would not meet the project purpose and need; (2) would result in unacceptable operational or safety problems; (3) after reasonable mitigation, causes: (3a) severe social, economic, or environmental impacts, (3b) severe community disruption, and/or (3c)

severe disproportionate impacts to minority or low-income populations; (3d) severe impacts to environmental resources protected by other federal statues; (4) additional construction, maintenance, or operational costs of an extraordinary magnitude; (5) other unique problems or unusual factors; and/or (6) multiple factors that, when combined, cumulatively cause unique problems or impacts of extraordinary magnitude.

- **Alternative with Least Overall Harm—**If no feasible and prudent avoidance alternative was identified that would avoid using a Section 4(f) property, the FHWA determined the alternative that would cause the least overall harm to Section 4(f) properties using the following factors (23 CFR 774.3(c)1): (1) the ability to mitigate adverse impacts to each Section 4(f) property; (2) the relative severity of the remaining harm after mitigation; (3) the relative significance of each Section 4(f) property; (4) the views of the officials with jurisdiction over each property; (5) the degree to which each alternative meets the project purpose and need; (6) the magnitude of adverse effects to resources not protected by Section 4(f); and (7) substantial cost differences among the alternatives.
- **Considering All Possible Planning to Minimize Harm—**Upon determining no feasible and prudent alternatives to avoid Section 4(f) properties, the FHWA considered and incorporated all possible planning to minimize the impacts of the Preferred Alternative. All possible planning, as defined in 23 CFR 774.17, means that all reasonable measures identified in the Section 4(f) evaluation to minimize harm or mitigate for adverse impacts and effects must be included in the project.
- **Coordinating with Officials with Jurisdiction—**The FHWA and DOTD have coordinated and continue to coordinate with the officials with jurisdiction over each of the protected properties for which a finding has been made in this Section 4(f) Evaluation.

5.1.3 Temporary Occupancy Exception (not a use)

Temporary occupancies do not constitute a use and, therefore, are not subject to the provisions of Section 4(f) if they meet <u>each</u> of the five criteria for temporary occupancy exception in 23 CFR 774.13(d):

- Duration of occupancy must be temporary; i.e., less than the time needed for construction of the project, and there can be no change in ownership of the land.
- The scope of work must be minor; i.e., both the nature and magnitude of the changes to the Section 4(f) property are minimal.
- There can be no anticipated permanent adverse physical impacts, nor can there be interference with the activities, features, or attributes of the property, on either a temporary or permanent basis.
- The land being used must be fully restored; i.e., the property must be returned to a condition which is at least as good as that which existed prior to the project.
- Written concurrence must be obtained from the officials having jurisdiction, documenting agreement with the above conditions.

As per Section 4(f) regulations, evaluations of avoidance alternatives and selection of an alternative having the least overall harm are not required for a temporary occupancy finding and were not developed by the FHWA in this Draft

Section 4(f) Evaluation. If concurrence is obtained from the officials with jurisdiction over the properties, a final finding will be made by FHWA in the Final Section 4(f) Evaluation, which will be included in the Finding of No Significant Impact (FONSI).

5.1.4 De minimis Impact

If criteria for the temporary occupancy exception were not met, the FHWA and DOTD considered the potential for a *de minimis* impact. In general, a finding of *de minimis* impact can be made only if the project will not adversely affect the qualities that make the Section 4(f) resource significant. The specific requirements for a *de minimis* impact finding are different for historic sites and for public parklands, recreational areas, and wildlife and waterfowl refuges. As per Section 4(f) regulations, evaluations of avoidance alternatives and selection of an alternative having the least overall harm are not required if a *de minimis* impact finding is made.

5.1.5 Historic Properties

As defined in 23 CFR 774.5, a *de minimis* impact determination is made for an historic site if the FHWA makes a determination of “No Adverse Effect” or “No Historic Properties Affected” for the property through consultation under Section 106 of the National Historic Preservation Act (NHPA), and the State Historic Preservation Officer (SHPO) concurs with that determination.

5.1.6 Parks, Recreation Areas, and Refuges

A *de minimis* impact on a public parkland or recreational area, and wildlife and waterfowl refuge is defined as that which does not “adversely affect the features, activities, and attributes qualifying the property for protection under Section 4(f).” This finding can be made only with the concurrence of the “official with jurisdiction” (typically, the agency that owns and/or administers the park), and can be made only after an opportunity for public review and comment on the proposed finding.

5.2 Purpose and Need

The purpose of the proposed action is

- to increase the vehicle capacity of the crossing of the Red River at Jimmie Davis Highway (LA 511) in order to provide at least a level of service (LOS) C;
- to provide a safe river crossing for bicycles and pedestrian traffic; and
- to replace, or extend the life of, an aging bridge structure.

5.2.1 Need for Relief of Traffic Congestion

- The 2009 Average Daily Traffic (ADT) of 27,679 vehicles using the existing 2-lane bridge is expected to increase by 2036. To provide a minimum Level of Service (LOS) of C, two lanes in each direction are necessary.
- In 2009 the signalized intersection of Jimmie Davis Highway and CenturyLink Center Drive / Zach Avenue at the bottom of a five percent grade on the east bridge approach had a LOS D in the AM Peak and LOS F in the PM Peak.

- The existing bridge creates a capacity constraint on the LA 511 corridor because it is a two lane link in what is otherwise a 5-lane roadway extending 5.35 miles between LA 523 and Barksdale Boulevard (US 71).

5.2.2 Need for Bicycle and Pedestrian Crossing

As indicated in regional and local plans, the community supports a connection between the Red River Bicycle Trail and the Arthur Ray Teague Jogging Trail, which terminate on either side of the Red River in the vicinity of LA 511. Currently, there is no provision for bicycles or pedestrians to cross the river at this location.

- The *Northwest Louisiana Long Range Transportation Plan Update 2009-2030* prepared by the Northwest Louisiana Council of Governments (NLCOG) includes the project engineering in the Short Range Program (FY 2013-2015) and the project construction in the Long Range Program (FY 2016 – 2030). The project is described as LA 511 (Jimmie Davis Highway) Red River crossing - New 4-lane bridge structure with Bicycle Pedestrian facilities.
- The *Bossier City Comprehensive Plan (2002)* states: Throughout the public involvement process, several recommendations were made for additional pedestrian facilities including:
  - Pedestrian crossing over the Red River
  - Connect a bike trail over to Shreveport: Jimmie Davis Bridge
- The *Shreveport-Caddo 2030 Master Plan (2010)* states: A safe and attractive pedestrian and bicycling network integrated with vehicle transportation would:
  - Support a “Complete Streets” policy that provides roadway space for bicycles, pedestrians, automobiles and transit vehicles and integrates greenway and off-road bicycle routes with the roadway system.
  - Integrate pedestrian networks and bikeways into the development of public spaces and link community destinations through on and off-street facilities.

5.2.3 Need for Improved Safety

Structural:

The existing bridge is 45 years old and is showing signs of aging, including corrosion of steel members, erosion of the embankment, and cracks and spalling to the abutment walls and the deck.

Operating:

The existing 2-lane bridge does not have shoulders, sidewalks, or bicycle lanes.

5.2.4 Need for Access Improvements to Traffic Generators and Transportation Facilities

The location of the CenturyLink Center near the east approach of the bridge and the following recently completed and future projects are anticipated to increase traffic demand at the eastern approach.

Recent roadway improvements include construction of a 5-lane section along LA 511 from the bridge to Barksdale Boulevard (US 71), an extension of the 4-

lane Arthur Ray Teague Parkway to the intersection of Barksdale Boulevard (US 71) and Sligo Road (LA 612), and exit ramps from both eastbound and westbound Jimmie Davis Highway to the Arthur Ray Teague Parkway.

5.3 Selection of the Preferred Alternative

Following the Public Hearing held on May 14, 2015, and the associated comment period that ended on May 25, 2015, the DOTD selected a Preferred Alternative, which is the combination of Bridge Alternative 7, Trail Alternative 1 with a proviso, and Access Alternative B with Access Alternative C.

The alternatives development process and evaluation in this EA provided 16 possible combinations of Build Alternatives. Following the determination that the Rehabilitation Project for the existing bridge would advance, Bridge Alternative 5 was dropped from consideration as described in Section 2.4 of this EA. This left eight possible combinations as it is clear from traffic data and public opinion that the No Build Alternative would not be considered. In their deliberations, the project team made the following considerations and determinations:

- As Bridge Alternative 7, the construction of a new two-lane westbound bridge, is the only remaining bridge concept, it is included in the selection of the preferred alternative.
- Regarding the Trail, public comments totaled: 16 for, 0 against Trail 1; Trail 2 and 4 for, 1 against Trail 2. Comments supporting a trail, but offering no preference, totaled 6 for and 1 against. These comments and the grade crossings resulting from Trail 2, clearly recommend Trail 1. However, Trail 2 was developed as an alternative with a lower construction cost, and, more importantly, with a lower long term financial burden on DOTD to maintain it in good repair by eliminating any elevated structure that would be separate from the roadway bridge. Therefore, Trail 1 is selected with the proviso that prior to final design, Cooperative Endeavor Agreements, or other binding agreements, will be executed by DOTD and the local jurisdictions. These agreements will transfer all maintenance and liability responsibilities in perpetuity to the local jurisdictions for both the elevated and at-grade segments of the trails from the points, on each side of the river, at which the trail physically separates from the roadway bridge to the points at which they join the existing trails. If agreement is not reached timely, Trail 2 will be constructed.
- As Access Alternative B meets current design standards and public comments for Alternatives A and B were not substantially different, Alternative B is selected notwithstanding the estimated $2.55 million additional cost compared to Alternative A. It was determined that in a project of this scale, a potential savings of that sum does not justify failing to upgrade the roadway.
- Access Alternative C also is selected because, although it is estimated to increase the total project cost by $2.71 million, it was determined Alternative C is justified by the goodwill that would be gained by avoiding property takings on the north side, and the possibility that acquisition of those properties would equal or exceed the estimated construction cost.

At-grade and elevated segments on LA 511 will be realigned under the Preferred Alternative, but will not affect any Section 4(f) properties.

The Preferred Alternative also will include a shared use trail that connects the existing Arthur Ray Teague Jogging Trail within the Arthur Ray Teague Parkway right-of-way and the existing Red River Bicycle Trail in the Charles and Marie Hamel Memorial Park, which is located within the Clyde Fant Parkway right-of-way. Under both Trail Build Alternatives, the shared use trail would provide a paved 10 foot trail with 2 foot shoulders.

Trail Alternative 1, the Preferred Alternative, is aligned on the west side of the Red River between the Clyde Fant Parkway and the river from the bridge to the existing trailhead of the Red River Bicycle Trail for a distance of approximately 2,165 feet. Approximately 898 feet of this distance would be elevated on structure and the remainder would be at grade. The right-of-way would occupy approximately 2.229 acres entirely within the right-of-way of the Clyde Fant Parkway.

On the east side of the river, it is similarly aligned between the Arthur Ray Teague Parkway and the river from the bridge to the existing trailhead of the Arthur Ray Teague Jogging Trail for a distance of approximately 2,798 feet and is elevated for approximately 845 feet. The right-of-way would occupy approximately 2.618 acres of which 0.396 acres would be purchased from the Red River Waterway Commission and the remainder would be within the right-of-way of the Arthur Ray Teague Parkway.

Trail Alternative 2, which would be constructed if the proviso regarding maintenance and liability is not met, is aligned along, and coterminous with, the bridge structure. On the west side, after crossing the Clyde Fant Parkway, the mainline of LA 511 and the exit ramp connecting westbound traffic to the parkway are on a fill section. Trail Alternative 2 will remain adjacent to the structure and the ramp on structure and on fill to a point approximately 187 feet west of the parkway. From that point, it will turn south to a point sufficiently removed from the ramp terminal to cross the parkway at grade and would then turn north between the parkway and the river to join the existing trailhead of the Red River Bicycle Trail. It would extend approximately 2,693 feet from the end of the westbound exit ramp of the bridge to the existing trailhead of the Red River Bicycle Trail of which all would be at grade. The right-of-way would occupy approximately 1.880 acres entirely within the right-of-way of the Clyde Fant Parkway.

On the east side it would be adjacent to the structure of the entrance ramp from the Arthur Ray Teague Parkway to westbound LA 511. Upon reaching grade, it would curve counterclockwise to pass under the entrance ramp and continue north to the access drive of the CenturyLink Center where it would cross the parkway to join the existing trailhead of the Arthur Ray Teague Jogging Trail. It would extend approximately 4,224 feet from the end of the westbound entrance ramp of the bridge to the existing trailhead of which all would be at grade. The right-of-way would occupy approximately 2.885 acres of which 0.399 acres would be purchased from the Red River Waterway Commission and the remainder would be within the right-of-way of the Arthur Ray Teague Parkway.

5.4 Section 4(f) Properties

5.4.1 Publicly Owned Parks and Recreational Areas

There are three recreational properties within the project area that are protected by Section 4(f) based on consultation with the officials with jurisdiction over each property. Each was determined to be of national, state, or local significance and is classified as a publicly owned park, recreation area, or refuge. Table 5-1 lists the publicly owned parks and recreational areas within the project area; Figure 5-1 shows their location in relation to LA 511.

The Preferred Alternative would not result in the use of these properties. The only element of the Preferred Alternative, if it is a Build Alternative, which would occupy portions of these properties, would be the selected Trail Build Alternative, which itself would be a recreational facility. As a recreational facility, the shared use trail element of the Preferred Alternative, if a Build Alternative is selected, would enhance the existing publicly owned parks and recreational areas within the project area and would not be a Section 4(f) impact.

Table 5-1. Publicly Owned Parks and Recreational Areas within the Project Area

Property Name	Property Classification	Location	Official(s) with Jurisdiction	Function/ Amenities
Red River Waterway Commission Recreational Facilities (Arthur Ray Teague Jogging Trail)	Trail	Eastbank of Red River	Red River Waterway Commission	Trail, gazebo, picnic area, benches, boat launch
Red River Bicycle Trail	Trail	Westbank of Red River	City of Shreveport Department of Parks and Recreation	Trail
Charles and Marie Hamel Memorial Park	Park	Clyde Fant Parkway and Island Park Boulevard	Shreveport Department of Parks and Recreation	Picnic area

5.4.1.1 Arthur Ray Teague Jogging Trail

The Arthur Ray Teague Jogging Trail, illustrated in Figure 5-2, is one of the recreational amenities provided by the Red River Waterway Commission on separate parcels within the greenspace of the Arthur Ray Teague Parkway right-of-way. The other recreational amenities include two-lane boat launches, 2 boat docks, scenic overlooks, 7 picnic tables with grills, 3 picnic shelters, comfort stations, access roadways to parking areas, and 105 parking spaces of which there are 18 standard parking spaces, one handicap space, and an access road located at the southern trailhead in the project area. The Parkway extends south along the Red River from Diamond Jacks Boulevard, past the project area, to Sligo Road.

Completed in 2001, the Arthur Ray Teague Jogging Trail extends 5-miles between the Parkway and the Red River from a point approximately .23 miles south of Diamond Jacks Boulevard to a picnic area and parking spaces across the Parkway from the CenturyLink Center. The access road and parking area at the southern trailhead were completed concurrently.

Figure 5-2. Red River Waterway Commission, Arthur Ray Teague Parkway Amenities

The Arthur Ray Teague Parkway boat launch

The Arthur Ray Teague Jogging Trail

Figure 5-1. Publicly Owned Parks and Recreational Areas within the Project Area

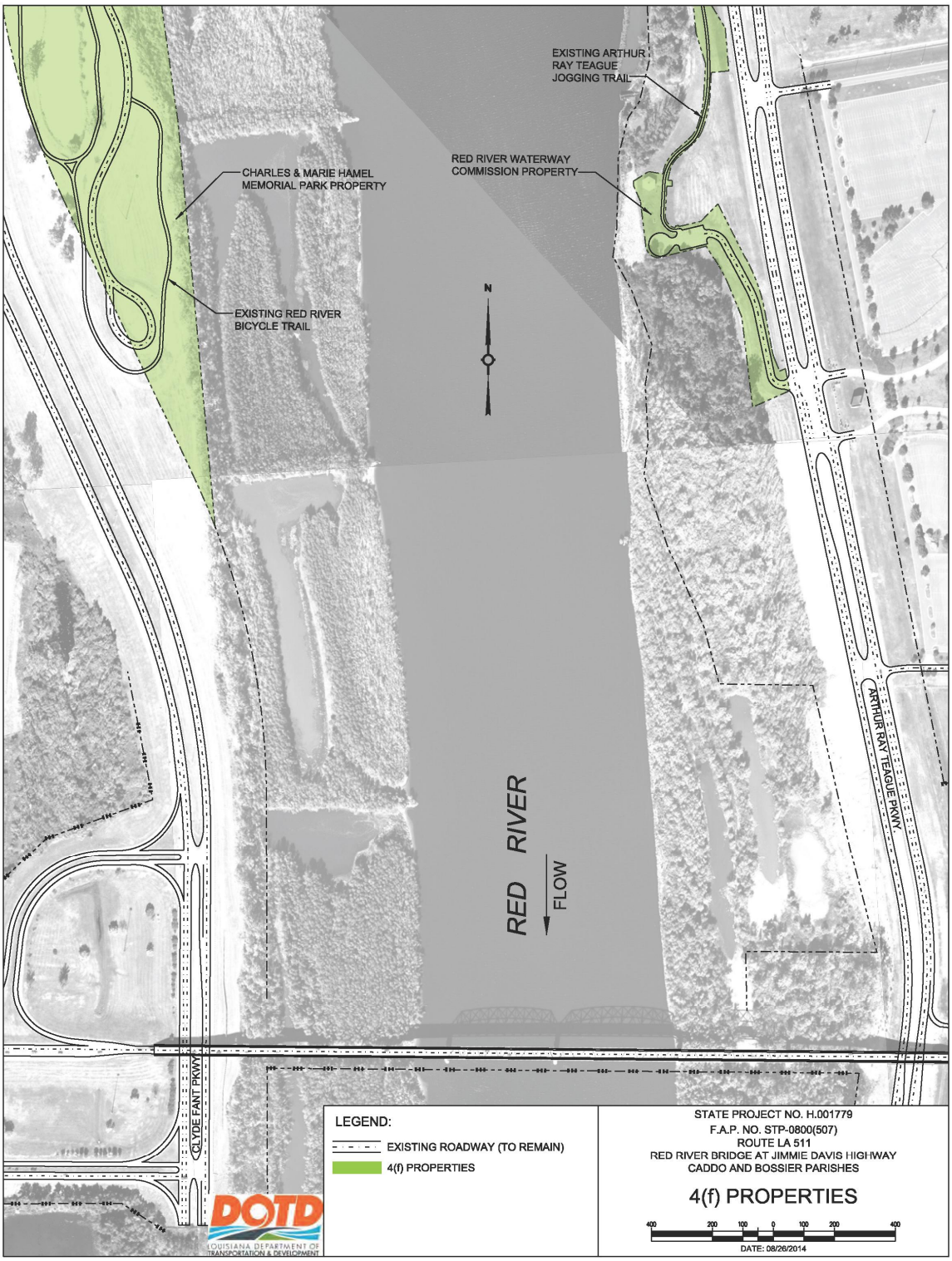

5.4.1.2 Red River Bicycle Trail

The Red River Bicycle Trail, shown in Figure 5-3, is one of the recreational amenities provided by the Shreveport Department of Parks and Recreation (SPAR) and by the Red River Waterway Commission on separate parcels within the greenspace of the Clyde Fant Parkway right-of-way. Clyde Fant Parkway runs along the Red River from Airport Drive, north of downtown Shreveport, to LA 511 (17th Street) in the project area.

The other recreational amenities provided by SPAR include:

- River View Park with the R.S. Barnwell Memorial Art Center, a Conservatory and Garden, and a playground;
- Veterans and Freedom Park and Disc Golf Course;
- Stoner Avenue Skate Plaza with a BMX track, inline skating, and skateboarding; and
- Charles and Marie Hamel Memorial Park, a 17-acre open space.

The recreational amenities provided by the Red River Waterway Commission are the Stoner Avenue Boat Launch with two Two-Lane Boat Launches, two Boat Docks, Picnic Tables with Grills, 104 parking Spaces, Floating Restaurant and Comfort Station. The Red River Bicycle Trail is an asphalt bicycle trail extending 6.6 miles from River View Park in downtown Shreveport to the Charles and Marie Hamel Memorial Park.

Figure 5-3. Red River Bicycle Trail

5.4.1.3 Charles and Marie Hamel Memorial Park

Charles and Marie Hamel Memorial Park is located along the Red River on both sides of the intersection of Clyde Fant Parkway and Island Park Boulevard. It is primarily a passive green space with a picnic area and views of the Red River maintained by the SPAR. Within the 17 acre site, the chief features are the southern trailhead of the Red River Bicycle Trail, a pond, and a roadway that provides access to a total of 107 parking spaces in 10 small parking areas. Figure 5-4 shows Charles and Marie Hamel Memorial Park.

Figure 5-4. Charles and Marie Hamel Memorial Park

5.4.2 Historic Sites

The Preferred Alternative will not use the one historic property protected by Section 4(f): the existing Jimmie Davis Bridge. The bridge has been determined eligible for listing on the National Register of Historic Places in the *Louisiana Historic Bridge Inventory*. The evaluation states

"This through truss bridge has significance as an example of a distinctive truss subtype. Significance is demonstrated by the presence of distinctive features of the Warren through truss, consisting of three spans characterized by diagonal members to withstand both tensile and compressive forces. This example has added verticals for bracing and a polygonal top chord. This bridge exhibits new concrete guardrail that results in a minor loss of integrity but is able to convey its significant design features. This bridge is eligible for listing in the National Register under Criterion C: Design/Engineering."

One of the projects within the No-Build Alternative, LA 511: Jimmie Davis Bridge Rehabilitation and Alternative 5 would "use" the bridge as defined in the Programmatic Section 4(f) Evaluation and Approval for FHWA Project that Necessitate the Use of Historic Bridges[1]. Under the No-Build Alternative, the

[1] A programmatic Section 4(f) approval that there are no feasible and prudent alternatives to the use of certain historic bridge structures to be replaced or rehabilitated with Federal funds and that the projects include all possible planning to minimize harm resulting from such use pursuant to Section 4(f) of the Department of Transportation Act of 1966, 49 U.S.C. 303, and Section 18(a) of the Federal-Aid Highway Act of 1968 23 U.S.C. 138.

The historic bridges covered by this programmatic Section 4(f) evaluation are unique because they are historic, yet also part of either a Federal-aid highway system or a state or local highway system that has continued to evolve over the years. Even though these structures are on or eligible for inclusion on the National Register of Historic Places, they must perform as an integral part of a modern transportation system. When they do not or cannot, they must be rehabilitated or replaced in order to assure public safety while maintaining system continuity and integrity. For the purpose of this programmatic Section 4(f) evaluation, a proposed action will "use" a bridge that is on or eligible for inclusion on the National Register of Historic Places when the action will impair the historic integrity of the bridge either by rehabilitation or demolition. Rehabilitation that does not impair the historic integrity of the bridge as determined by procedures implementing the national Historic Preservation Act of 1966, as amended (FHWA), is not subject to Section 4(f). for additional information, see http://www.environment.fhwa.dot.gov/4f/4fbridge.asp

procedures outlined in the Programmatic Evaluation will be followed because it is assumed that the No-Build Alternative will be implemented under the Build Alternative.

DOTD has initiated Section 106 consultation with the SHPO. In a letter dated October 13, 2014, found in Appendix D, the SHPO stated that if Alternative 5 is selected, further consultation with the SHPO is required in order to begin the Memorandum of Agreement process for the existing bridge, which also will satisfy the obligation under Section 4(f) of the US Department of Transportation Act. As Alternative 5 is not included within the Preferred Alternative, effects of the No Build will be considered through the Rehabilitation project.

The Preferred Alternative will not incur a permanent Section 4(f) use. Therefore, avoidance alternatives, minimization measures, and mitigation efforts, as well as continued consultation and coordination with officials having jurisdictional authority, will not be required.

5.5 Coordination

The DOTD initiated and is continuing intensive agency coordination and outreach with federal, state, and local agencies during the EA and Section 4(f) evaluation processes. Its coordination with the officials with jurisdiction has been particularly important to the Section 4(f) evaluation. The DOTD has worked with officials to identify properties, determine means to avoid or minimize use of Section 4(f)-protected properties through design refinements, and to develop measures to minimize harm.

Table 5-2. Summary of Preferred Alternative Historic Sites Uses/Impacts

Alternative	Bridge Build 7
Section 4(f) Property	Jimmie Davis Bridge
Section 106 Effect	To be determined through consultation
Permanent Use, not *De minimis*	N/A
Temporary Occupancy	N/A
Existing Property Acreage	N/A
Temporary Occupancy Acreage	N/A
Permanent Use Acreage	N/A
Percent Permanently Used	N/A

5.5.1 Officials with Jurisdiction

Coordination with the officials with jurisdiction over parks and historic properties in the project area has occurred as follows.

Red River Waterway Commission

The Red River Waterway Commission was initially contacted on November 15, 2013. Meetings to begin formal agency coordination will be held with The Red River Waterway Commission to provide a detailed overview of the Preferred

Alternative and to discuss coordination during construction and maintenance responsibilities following construction.

City of Shreveport Department of Parks and Recreation (SPAR)

SPAR was initially contacted on November 18, 2013. Meetings to begin formal agency coordination will be held with SPAR to provide a detailed overview of the Preferred Alternative and to discuss coordination during construction and maintenance responsibilities following construction.

City of Bossier City

The City of Bossier City will be contacted to begin formal agency coordination to provide a detailed overview of the Preferred Alternative and to discuss coordination during construction and maintenance responsibilities following construction.

Bossier Parish

Bossier Parish will be contacted to begin formal agency coordination to provide a detailed overview of the Preferred Alternative and to discuss coordination during construction and maintenance responsibilities following construction.

Louisiana Department of Culture, Recreation, and Tourism, Office of Cultural Development, Division of Historic Preservation (SHPO)

FHWA will initiate the Section 106 consultation process with the Division of Historic Preservation to determine the eligibility of the existing Jimmie Davis Bridge for listing in the National Register of Historic Places (NRHP), delineate the historic boundary of the property, establish an Area of Potential Effects, determine the effects of the No-Build and Bridge Build Alternatives on the historic property, and develop appropriate mitigation for adverse effects in a Memorandum of Agreement. The Division of Historic Preservation was invited to participate in the Agency Meeting sponsored by DOTD and attended by FHWA on August 15, 2013.

5.5.2 Public

The public was afforded an opportunity to review and comment on the Draft Section 4(f) Evaluation concurrently with the Jimmie Davis Bridge (LA 511) Draft Environmental Assessment. No public comments on the Section 4(f) Evaluation were received.

THIS PAGE INTENTIONALLY LEFT BLANK

ACRONYMS/ABBREVIATIONS

THIS PAGE INTENTIONALLY LEFT BLANK

ACRONYMS/ABBREVIATIONS

BMPs	Best Management Practices
CWA	Clean Water Act
DOTD	Louisiana Department of Transportation and Development
ESA	Endangered Species Act
FAA	Federal Aviation Administration
FAC	Facultative
FACU	Facultative Upland
FACW	Facultative Wetland
FEMA	Federal Emergency Management Administration
FHWA	Federal Highway Administration
GIS	Geographic Information System
GPS	Global Positioning System
IR	Integrated Report
LDWF	Louisiana Department of Wildlife and Fisheries
LDEQ	Louisiana Department of Environmental Quality
LDHH	Louisiana Department of Health and Hospitals
LDNR	Louisiana Department of Natural Resources
LNHP	Louisiana Natural Heritage Program
LPDES	Louisiana Pollutant Discharge Elimination System
LRR	Land Resource Region
MBTA	Migratory Bird Treaty Act
NLCOG	Northwest Louisiana Council of Governments
NRHP	National Register of Historic Places
NRCS	Natural Resources Conservation Service
NPDES	National Pollutant Discharge Elimination System
NWI	National Wetland Inventory
OBL	Obligate Wetland
ROW	Rights of Way
SHPO	State Historic Preservation Officer
SOV	Solicitation of Views
SPAR	City of Shreveport Department of Parks and Recreation
UPL	Upland
USACE	U.S. Army Corps of Engineers
USDA	U.S. Department of Agriculture
USEPA	U.S. Environmental Protection Agency
USFWS	U.S. Fish and Wildlife Service
USGS	U.S. Geological Survey
WRP	Wetlands Reserve Program

THIS PAGE INTENTIONALLY LEFT BLANK

REFERENCES

THIS PAGE INTENTIONALLY LEFT BLANK

REFERENCES

Environmental Laboratory. 1987. *Corps of Engineers Wetlands Delineation Manual*. *Technical Report Y-87-1*. U.S. Army Engineer Waterways Experiment Station, Vicksburg, Mississippi.

Louisiana Department of Environmental Quality (LDEQ). 2012. Louisiana Water Quality Inventory: Integrated Report (305(b)/303(d)) Final. Website: http://www.deq.louisiana.gov/portal/DIVISIONS/WaterPermits/WaterQualityStandardsAssessment/WaterQualityInventorySection305b/2012IntegratedReport.aspx.

Louisiana Department of Transportation and Development (LADOTD). 2007. Erosion Control Guidelines: Plan Checking and Design Procedures for Erosion and Sediment Control. Website: http://www.dotd.la.gov/highways/project_devel/design/road_design/Erosion%20Control%20Guidelines/00%20La%20DOTD%20Erosion%20Control%20Guidelines%20(Full%20Text).pdf.

Louisiana Department of Wildlife and Fisheries (LADWF). 2013. Louisiana Natural and Scenic Rivers Descriptions and Map. Website: http://www.wlf.louisiana.gov/louisiana-natural-and-scenic-rivers-descriptions-and-map.

Louisiana State Legislature. *Louisiana Scenic Rivers Act of 1988*. R.S. 56:1840, *et seq*. July 27, 1988.

U.S. Army Corps of Engineers (USACE). 2013. *National Wetland Plant List: Louisiana.* Website: http://rsgisias.crrel.usace.army.mil/NWPL/.

USACE. 2010. *Regional Supplement to the Corps of Engineers Wetland Delineation Manual: Atlantic and Gulf Coastal Plain Region*. U. S. Army Corps of Engineers. November 2010.

U.S. Department of Agriculture (USDA). 2013. Web Soil Survey. Website: http://websoilsurvey.nrcs.usda.gov/app/. Last modified: February 15, 2013.

USDA. 1980. Soil Survey of Caddo Parish, Louisiana.

USDA. 1962. Soil Survey of Bossier Parish, Louisiana.

U.S. Fish and Wildlife Service (USFWS). 2013. Environmental Conservation Online System (ECOS). Website: http://ecos.fws.gov/tess_public/.

U.S. Congress. *Farmland Protection Policy Act of 1981 and 1994*, as amended. 7 U.S.C. 4201. June 17, 1994.

U.S. Congress. *Migratory Bird Treaty Act of 1918.* 16 U.S.C. 703 *et seq.*

U.S. Congress. *Endangered Species Act of 1973*. Public Law 93-205. 7 U.S.C. 136. 1973.

U.S. Congress. *Coastal Zone Management Act of 1972*. 16 U.S.C. 1451 *et seq.* 1972.

U.S. Congress. *Clean Water Act Amendments of 1987*. Public Law 92-500. October 18, 1972.

U.S. Congress. *Federal Water Pollution Control Act of 1972,* as amended by the *Clean Water Act of 1977*. 33 U.S.C 1251 *et seq*. 1972.

U.S. Congress. *Rivers and Harbors Appropriation Act of 1899*, as amended. 33 U.S.C. 401, 403, 407. March 3. 1899.

Louisiana Department of Transportation and Development*, Highway Traffic Noise Policy*, Baton Rouge, LA, July 2011.

US Department of Transportation, *Highway Traffic Noise: Analysis and Abatement Guidance*, Federal Highway Division, FHWA-HEP-10-025, Washington, DC, July 2010.

THIS PAGE INTENTIONALLY LEFT BLANK