Interchange for US 90 and LA 318
Supplemental Environmental Assessment

Interchange for US 90/LA 318
Route US 90
St. Mary Parish, Louisiana
State Project No. H.004932
Federal Aid Project No. H004932

In conjunction with the

October 2015

Interchange for US 90 and LA 318
Supplemental Environmental Assessment

Interchange for US 90/LA 318
Route US 90
St. Mary Parish, Louisiana
State Project No. H.004932
Federal Aid Project No. H004932

In conjunction with the

Prepared by:

AECOM

October 2015

Notice to Reader

This Supplemental EA summarizes the environmental impacts associated with the conceptual design of the proposed Alternative Technical Concept against the preferred alternative (Alternative E) from the October 2013 Final EA/FONSI. The build alternatives are preliminary and should not be used for design, construction, or remedial action.

TABLE OF CONTENTS

Page

ENVIRONMENTAL DETERMINATION CHECKLIST CL-1

EXECUTIVE SUMMARY ES-1

1.0 INTRODUCTION AND PURPOSE AND NEED 1-1
1.1 Project Description 1-1
1.2 Project History 1-1
1.3 Requirements for this Study 1-1
1.4 Proposed Action 1-1
1.5 Purpose and Need 1-2

2.0 ALTERNATIVES CONSIDERED 2-1
2.1 Alternatives Evaluated in this EA 2-1
2.2 Preferred Alternative 2-9
2.3 Roadway Design Guidelines 2-10
2.4 Conceptual Engineering Design Layouts 2-13
2.5 Preliminary Implementation Cost Estimates 2-13

3.0 AFFECTED ENVIRONMENT AND IMAPCTS 3-1
3.1 Land Use and Relocation Impacts 3-1
3.2 Demographics and Environmental Justice 3-4
3.3 Community Facilities 3-8
3.4 Transportation and Traffic 3-8
3.5 Utilities 3-13
3.6 Visual Environment 3-13
3.7 Cultural Resources 3-13
3.8 Section 4(f) and 6(f) 3-14
3.9 Water Resources 3-14
3.10 Floodplains 3-14
3.11 Geology and Mineral Resources 3-15
3.12 Prime Farmland and Other Soils 3-15
3.13 Hazardous Material Sites 3-15
3.14 Air Quality 3-16
3.15 Noise 3-16
3.16 Upland, Wetland and Aquatic Communities 3-17
3.17 Plants and Wildlife Protected by Law 3-19
3.18 Coastal Zone Management 3-19
3.19 Construction Effects and Best Management Practices 3-19
3.20 Secondary and Cumulative Effects 3-19

4.0 SUMMARY AND RECOMMENDATIONS 4-1
4.1 Summary of Environmental Impacts 4-1
4.2 Summary of Permits and Certifications 4-5
4.3 Summary of Commitments and Mitigation Measures 4-6

5.0 AGENCY, PUBLIC, AND TRIBAL COORDINATION AND INVOLVEMENT 5-1
5.1 Solicitation of Views 5-1
5.2 Public Involvement 5-2
5.3 Agency and Stakeholder Coordination 5-5
5.4 Supplemental EA Distribution 5-5

6.0 REFERENCES CITED 6-1

7.0 ACRONYM LIST 7-1

LIST OF FIGURES

		Page
Figure ES-1	Study Area	ES-2
Figure ES-2	Overview Alternative E	ES-3
Figure ES-3	Overview ATC	ES-4
Figure 2-1	Overview Alternative E	2-3
Figure 2-2	Overview ATC	2-7
Figure 3-1	Potential Relocations with the ATC	3-3
Figure 3-2	Project Demographics	3-7
Figure 3-3	Environmental Inventory	3-18

LIST OF TABLES

Table ES-1	Summary of Project Features and Impacts	ES-5
Table 2-1	Comparison of Build Alternative Interchange Design and Operational Features	2-9
Table 2-2	Roadway Design Guidelines	2-11
Table 2-3	Preliminary Project Implementation Cost Estimate	2-14
Table 3-1	Land Use Impacts by Alternative and Type	3-1
Table 3-2	Estimated Structure Acquisition Impacts	3-2
Table 3-3	Comparative Acquisition and Relocation Impacts on Percent Minority Populations	3-5
Table 3-4	Intersection Level of Service Results for Alternative E	3-9
Table 3-5	Intersection Level of Service Results for the ATC	3-9
Table 3-6	Ramp Junction Level of Service Results for Alternatives E and the ATC	3-10
Table 3-7	Potential Impacts to 100-year Floodplain	3-14
Table 3-8	Potential Impacts to Prime Farmland Soil Types	3-15
Table 3-9	Summary of Traffic Noise Impacts Year 2035	3-16
Table 3-10	Estimated Barrier Costs Per benefitted Receiver for the ATC	3-17
Table 3-11	Potential Impacts to Upland, Wetland, and Aquatic Communities	3-17
Table 4-1	Summary of Project Features and Impacts	4-1
Table 5-1	Summary of Solicitation of Views Responses	5-1
Table 5-2	Summary of August 2015 Public Meeting Comments and Resolution	5-3
Table 5-3	Supplemental EA Distribution List	5-6

APPENDICES

Appendix A	Project Design Plans
Appendix B	Construction Cost Estimates
Appendix C	Farmland Conversion Impact Rating Forms
Appendix D	Noise Memorandum
Appendix E	SOV Packet, SOV Agency Responses, Public Meeting Notification, Project Mailing Lists, Public Meeting Responses, Distribution List for Public Meeting Synopsis

ENVIRONMENTAL CHECKLIST

State Project No. H.004932
Name: Interchange at US 90 and LA 318
Route: US 90
Parish: St. Mary Parish

1. General Information

☐Conceptual Layout ☒Line and Grade ☐Preliminary Plans
☐Survey ☐Plan-in-Hand ☐Advance Check Prints

2. Class of Action

☐ Environmental Impact Statement (E.I.S.) ☐ State Funded Only (EE/EF/ER)
☒ Environmental Assessment (E.A.) ☐ Categorical Exclusion (C.E.)
☐ Programmatic C.E. (as defined in FHWA letter of agreement dated 03/15/95)

3. Project Description

The proposed project includes upgrading the existing US 90 and LA 318 signalized intersection to a full control of access, grade-separated interchange including the reconstruction of the US 90 frontage roads to provide local access to LA 318. The proposed action includes two build alternatives, either a partial cloverleaf interchange (one loop ramp) with US 90 as an overpass or a rural modified diamond interchange with US 90 as an overpass.

4. Public Involvement

☒ Views were solicited.
☐ Views were not solicited.
☒ Public Involvement events held. (List events and dates in Section 11.)
☐ A public hearing/opportunity for requesting a public hearing required. (List dates in Section 11.)
☐ A public hearing/opportunity for requesting a public hearing not required.

5. Real Estate

	NO	YES	N/A
a. Will additional **right-of-way** be required?	☐	☒	☐
Is right of way required from a **burial/cemetery** site?	☒	☐	☐
Is right-of-way required from a Wetland Reserve Program (**WRP**) property?	☒	☐	☐
Is required right-of-way prime **farmland**? (Use form AD 1006, if needed) ...	☐	☒	☐
b. Will any **relocation** of residences or businesses occur?	☐	☒	☐
c. Are construction or drainage **servitudes** required?	☒	☐	☐

6. Section 4(f) and Section 6(f)

	NO	YES	N/A
a. Will historic sites or publicly owned parks, recreation areas, wildlife or waterfowl refuges (**Section 4f**) be affected?	☒	☐	☐
b. Are properties acquired or improved with **L&WC** funds affected?	☒	☐	☐

7. Cultural Section 106

		NO	YES	N/A
a.	Are any **known historic properties** adjacent or impacted by the project? (If so, list below)……..	☐	☒	☐
b.	Are any k**nown archaeological sites** adjacent or impacted by the project? (If so, list site # below) ……..	☒	☐	☐
c.	Would the project affect property owned by or held in trust for a federally recognized **tribal government**?	☒	☐	☐

8. Natural & Physical Environment

		NO	YES	N/A
a.	Are **wetlands** affected? …….....	☐	☒	☐
b.	Are **other waters** of the U.S. affected? …….....	☐	☒	☐
c.	Are **Endangered/Threatened Species**/Habitat affected? ……	☒	☐	☐
d.	Is project within 100 Year **Floodplain**?	☐	☒	☐
e.	Is project in **Coastal Zone** Management Area?	☐	☒	☐
f.	Is project in a **Coastal Barrier Resources** area? ……..	☒	☐	☐
g.	Is project on a **Sole Source Aquifer**? ……..……..	☐	☒	☐
h.	Is project impacting a **navigable waterway**?	☒	☐	☐
i.	Are any State or Federal **Scenic Rivers/Streams** impacted? ……	☒	☐	☐
j.	Is a **noise** analysis warranted (Type I project) ……..……..	☐	☒	☐
k.	Is an **air** quality study warranted?	☐	☒	☐
l.	Is project in a **non-attainment** area? …….....	☒	☐	☐
m.	Is project in an approved Transportation Plan, Transportation Improvement Program (TIP) and State Transportation Improvement Program (**STIP**)?	☐	☒	☐
n.	Are **construction** air, noise, & water impacts major? ……..	☒	☐	☐
o.	Will the project affect or be affected by a **hazardous waste site**, leaking underground storage tank, oil/gas well, or other potentially contaminated site?	☒	☐	☐

9. Social Impacts

		NO	YES	N/A
a.	Will project change **land use** in the area? ……..	☐	☒	☐
b.	Are any c**hurches and schools** impacted by or adjacent to the project? ….. (If so, list below)	☒	☐	☐
c.	Has **Title VI** been considered? ……..	☐	☒	☐
d.	Will any **specific groups** be adversely affected? (i.e., *minorities, low-income, elderly, disabled,* etc.) ……..	☒	☐	☐
e.	Are any h**ospitals, medical facilities, fire police** facilities impacted by or adjacent to the project? (If so, list below)……..	☒	☐	☐
f.	Will **Transportation patterns** change? ……..	☐	☒	☐
g.	Is **Community cohesion** affected by the project? ……..	☒	☐	☐
h.	Are **short-term social/economic** impacts due to construction considered major?	☒	☐	☐
i.	Do conditions warrant **special construction times?** (i.e., *school in session, congestion, tourist season, harvest*) ……..	☐	☒	☐
j.	Were **Context Sensitive Solutions** considered? (If so explain below)……..	☐	☒	☐
k.	Were **bike and pedestrian** accommodations considered? (explain below)…..	☒	☐	☐

		NO	YES	N/A
l.	Will the **roadway/bridge be closed?** (If yes, answer questions below)…….	☒	☐	☐
	Will a **detour bridge** be provided?	☒	☐	☐
	Will a **detour road** be provided?	☒	☐	☐
	Will a **detour route** be signed?	☒	☐	☐

10. Permits (Check all permits that may be required)

☒Corps Nationwide	☒CUP/Consistency Determination	☐LA Scenic Stream
☐Corps Section 404/10	☐USCG Bridge	☒DEQ WQC
☐Levee	☐USCG Navigational Lights	☒LPDES Stormwater
☐Other (explain below)		

11. Other (Use this space to explain or expand answers to questions above.)

4 - A Public Meeting was held on August 27, 2015.

7a - The potential historic structure is located in the northwest quadrant of the interchange but will not be directly impacted by Alternative E or the ATC. An effects determination relative to NRHP eligibility is forthcoming from SHPO.

9i - LA 318 shall remain open to traffic during the harvest season

9j - Frontage Road alignment on NW quadrant shifted to minimize residential impacts

Preparer: AECOM
Title: Environmental Planner/Consultant
Date: October 2015

Attachments

☒ S.O.V. and Responses (Appendix E)
☒ Wetlands Finding (Stand-alone report and Section 3.16)
☒ Project Description Sheet (Section 1.0, 2.0, & 3.0)
☒ Conceptual Stage Relocation Plan (Stand-alone report)
☒ Noise Analysis (Appendix D)
☒ Air Analysis (Section 3.14)
☒ Exhibits and/or Maps (included in EA)
☒ 4(f) Evaluation (Section 3.8)
☒ Form AD 1006 (Farmlands) (Appendix C)
☒ 106 Documentation (Stand-alone report submitted to SHPO)
☐ Other_____

Due to the similarity in footprint and impacts of the Alternative ATC to the alternatives evaluated in the Final EA/FONSI dated October 2013, that report along with the stand along reports cited in the attachments section can be used for reference and were not re-created for the supplemental EA. Several reports including the Nosie and Cultural Resources were re-evaluated and the revised reports are referenced.

This Page Intentionally Left Blank

EXECUTIVE SUMMARY

Location of Proposed Project

The Louisiana Department of Transportation and Development (LADOTD) is proposing to construct a grade-separated interchange at the intersection of US Highway 90 (US 90) and Louisiana Highway 318 (LA 318). The proposed project is located in a rural area of St. Mary Parish, Louisiana, near the Cities of Jeanerette and Baldwin (see **Figure ES-1**). Major industry within the project vicinity includes the St. Mary Sugar Cooperative located north of the proposed project on LA 318 at LA 182, and the Port of West St. Mary located approximately 15 miles southwest of the proposed project.

Purpose and Need

The purpose and need of the project includes:

- Upgrading US 90 to interstate standards as part of the proposed future corridor for Interstate 49 (I-49) South in accordance with legislative direction;
- Improving connectivity and system linkage for industrial and commodities transport to the sugar mill and port-related industries; and
- Decreasing peak hour delay, increasing capacity, and improving overall mobility.

Alternatives Development and Screening Methodology

Three preliminary, grade-separated interchange concepts for the proposed interchange were evaluated as part of the *US 90 and LA 318 Overpass Stage 0 Feasibility Study* (May 2007). One of the *Stage 0 Feasibility Study* interchange concepts was retained for further evaluation and two new, grade-separated interchange alternatives were developed as part of this *Stage 1* Environmental Assessment (EA). Preliminary evaluation of these three Conceptual Alternatives (A, B, and C) included obtaining public input through a March 22, 2011 Public Meeting, from which the Conceptual Alternatives were further refined to minimize residential impacts. Based on agency and public comments, in combination with a preliminary screening evaluation of the Conceptual Alternatives, LADOTD retained one Conceptual Alternative (Alternative B) and determined that it was necessary to develop an additional build alternative (Alternative D).

Alternatives Evaluated in the Draft EA

Alternative B and Alternative D were the build alternatives selected and subsequently carried forth for further evaluation in the Draft EA, along with the No-Build Alternative. Alternative B consists of providing a full control of access, grade-separated overpass structure along US 90 that spans over LA 318. Alternative B would be constructed as a rural diamond interchange. Alternative D consists of providing a full control of access, grade-separated overpass structure along LA 318 that spans over US. Alternative D would be constructed as a combination partial cloverleaf and diamond interchange.

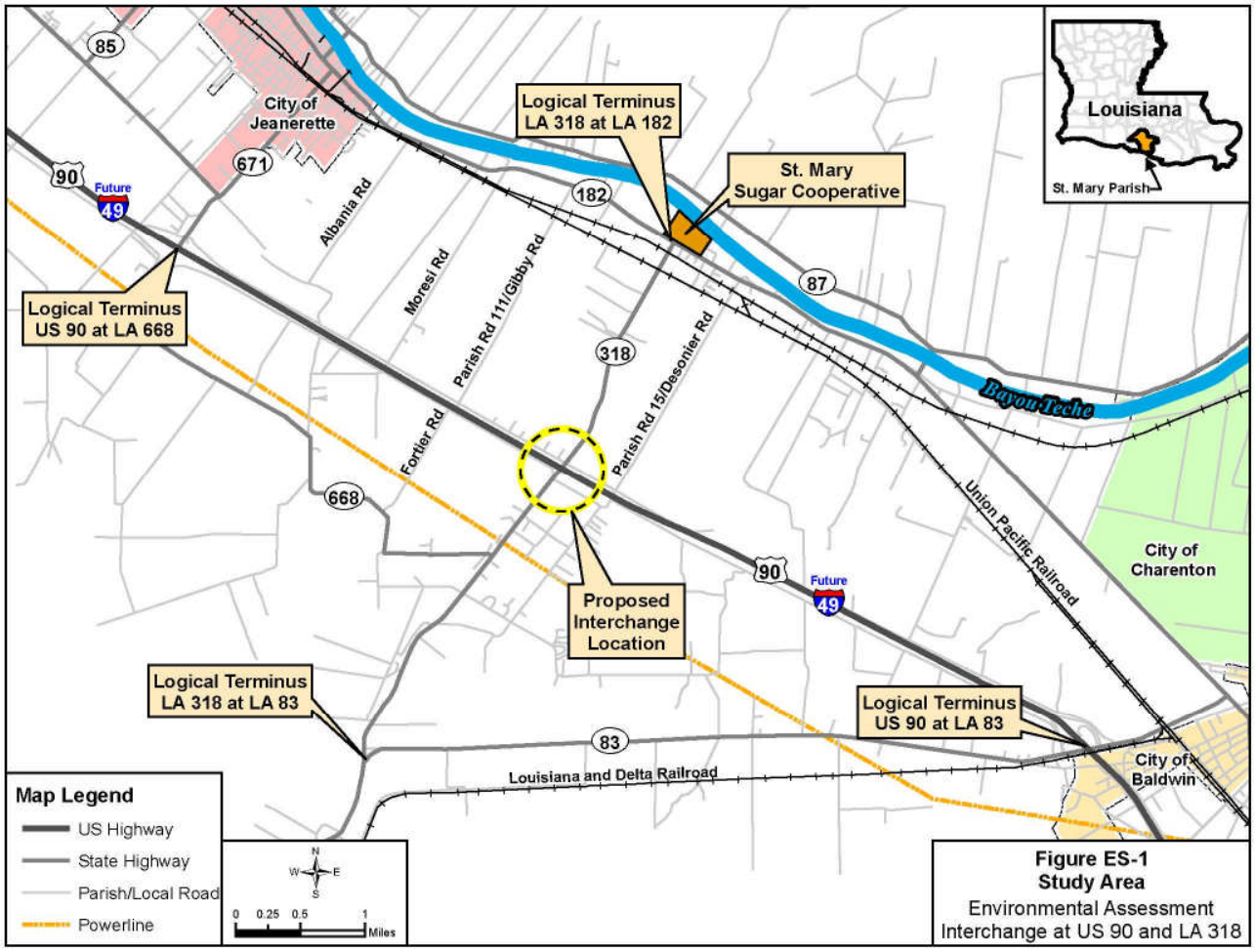

Selection of a Preferred Alternative

The final phase of the alternatives development process is the selection of a preferred alternative by the Federal Highway Administration (FHWA) and LADOTD. As a result of public input and comments at the Public Hearing and received during the 30-day comment period, a new build alternative was developed. Alternative E (see **Figure ES-2**) was a combination of both Alternative B and Alternative D, but with fewer overall residential impacts. Since Alternative E achieved all of the positive benefits of either Alternative B or Alternative D but with less residential relocations, it was identified as the preferred alternative by FHWA and LADOTD. A Finding of No Significant Impact (FONSI) was issued for Alternative E in October 2013.

Supplemental EA and Re-Evaluation

The project was selected to proceed as a design/build and during that process the design team proposed several modifications to the preferred alternative (Alternative E). This revised alternative is identified as the Alternative Technical Concept (ATC) (see **Figure ES-3**) and further reduces impacts while lowering construction costs. The ATC is being evaluated against Alternative E in this Supplemental EA.

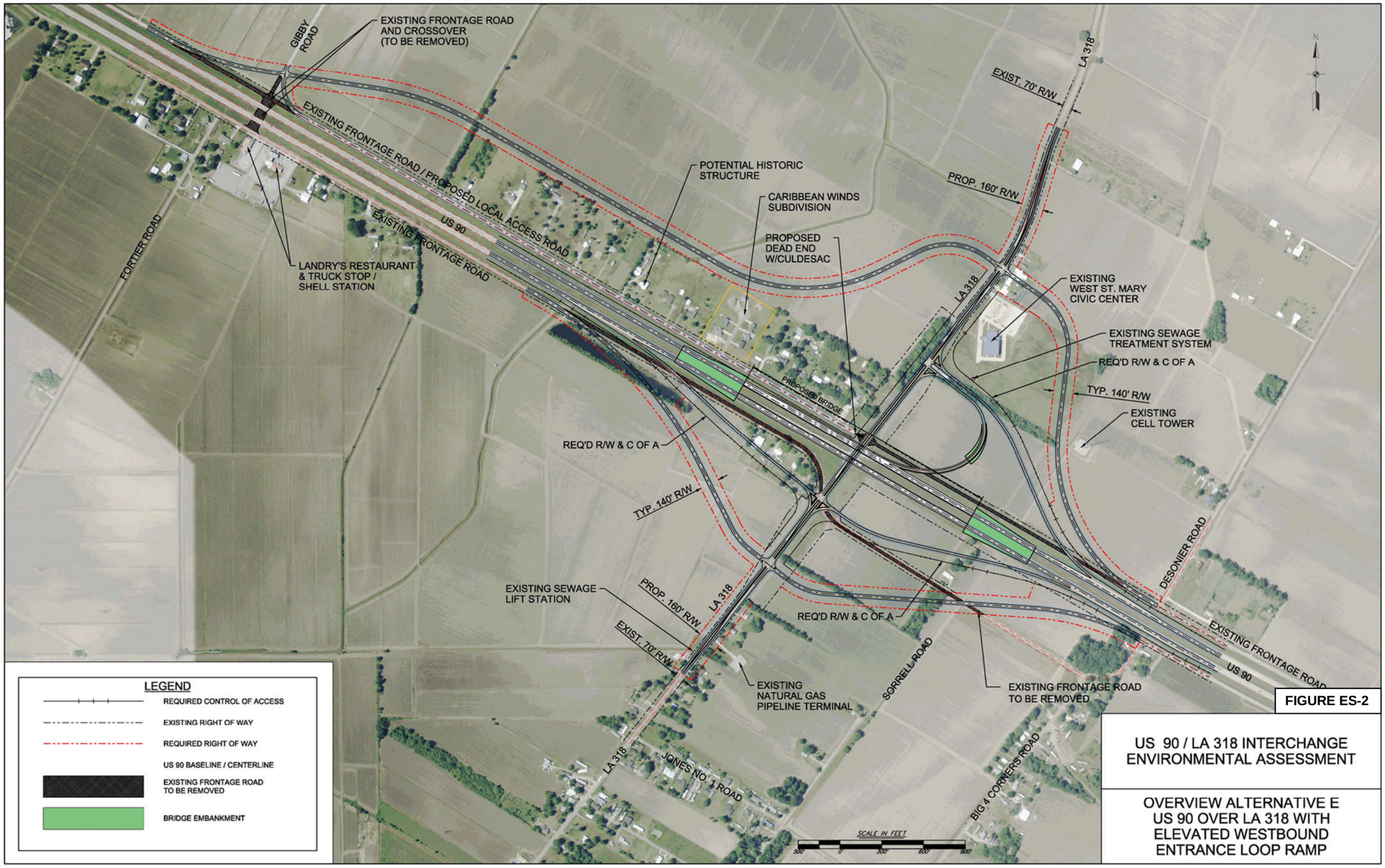

FIGURE ES-2

US 90 / LA 318 INTERCHANGE
ENVIRONMENTAL ASSESSMENT

OVERVIEW ALTERNATIVE E
US 90 OVER LA 318 WITH
ELEVATED WESTBOUND
ENTRANCE LOOP RAMP

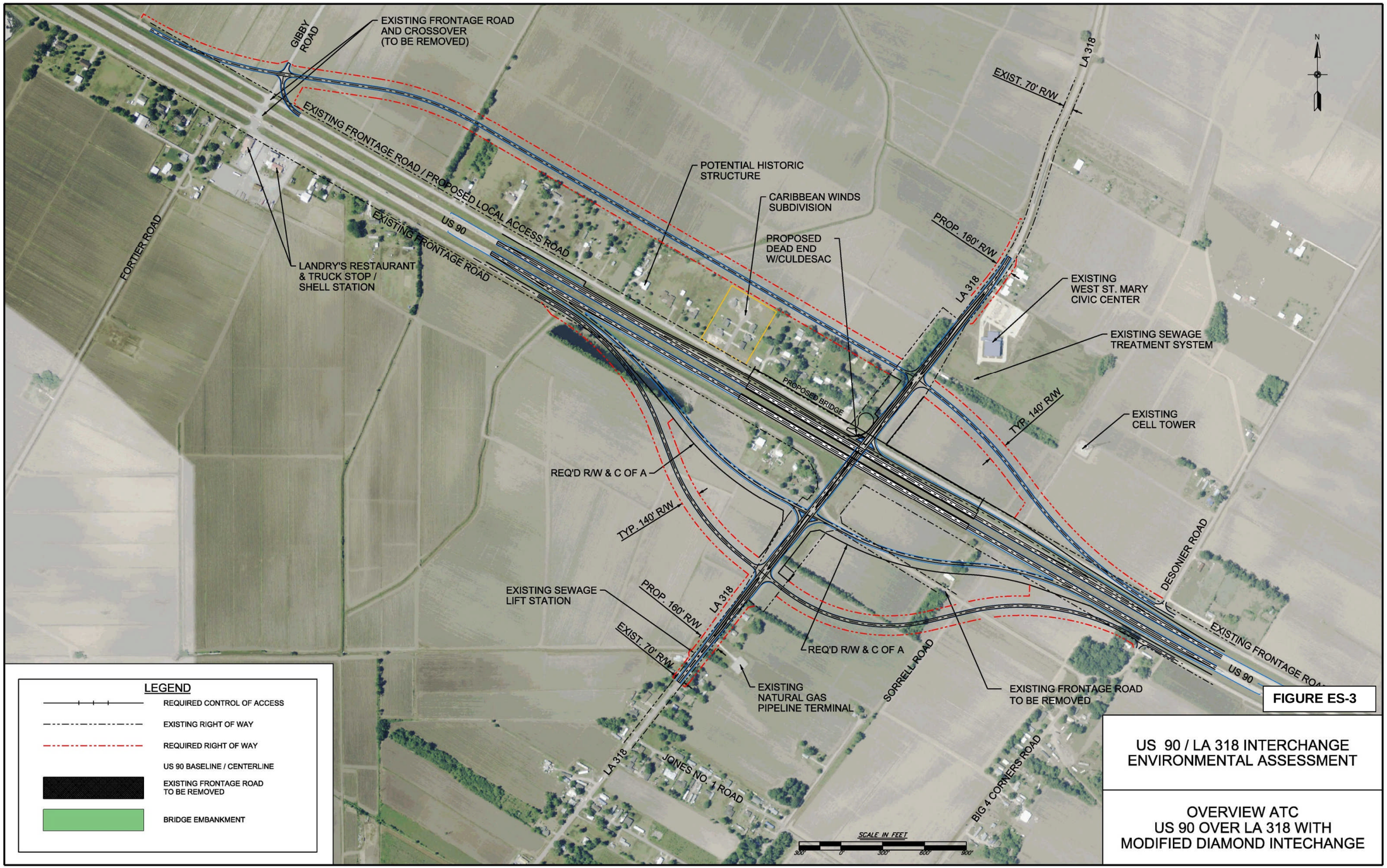
GIBBY ROAD
EXISTING FRONTAGE ROAD AND CROSSOVER (TO BE REMOVED)
EXISTING FRONTAGE ROAD / PROPOSED LOCAL ACCESS ROAD
EXISTING FRONTAGE ROAD
US 90
FORTIER ROAD
LANDRY'S RESTAURANT & TRUCK STOP / SHELL STATION
POTENTIAL HISTORIC STRUCTURE
CARIBBEAN WINDS SUBDIVISION
PROPOSED DEAD END W/CULDESAC
PROPOSED BRIDGE
EXIST. 70' R/W
LA 318
PROP. 160' R/W
EXISTING WEST ST. MARY CIVIC CENTER
EXISTING SEWAGE TREATMENT SYSTEM
TYP. 140' R/W
EXISTING CELL TOWER
REQ'D R/W & C OF A
TYP. 140' R/W
EXISTING SEWAGE LIFT STATION
PROP. 160' R/W
LA 318
EXIST. 70' R/W
REQ'D R/W & C OF A
DESONIER ROAD
EXISTING FRONTAGE ROAD
US 90
EXISTING NATURAL GAS PIPELINE TERMINAL
SORRELL ROAD
EXISTING FRONTAGE ROAD TO BE REMOVED
LA 318
JONES NO. 1 ROAD
BIG 4 CORNERS ROAD
SCALE IN FEET
300' 0' 300' 600' 900'
N
LEGEND
REQUIRED CONTROL OF ACCESS
EXISTING RIGHT OF WAY
REQUIRED RIGHT OF WAY
US 90 BASELINE / CENTERLINE
EXISTING FRONTAGE ROAD TO BE REMOVED
BRIDGE EMBANKMENT
FIGURE ES-3
US 90 / LA 318 INTERCHANGE ENVIRONMENTAL ASSESSMENT
OVERVIEW ATC US 90 OVER LA 318 WITH MODIFIED DIAMOND INTECHANGE

Summary of Environmental Impacts

Table ES-1
Summary of Project Features and Impacts

Evaluation Criteria	Unit	Build Alternative [1]	
		E	ATC
Interchange Alignment and Right-of-way Considerations			
Interchange Type - Rural	n/a – not applicable	Combination Partial Cloverleaf and Diamond	Diamond
Ramp Configuration	n/a	One Loop Ramp and 3 Diamond / Diagonal Ramps Constructed in 3 Quadrants	Diamond / Diagonal Ramps Constructed in 4 Quadrants
Bridge Configuration	n/a	US 90 over LA 318	US 90 over LA 318
Required Right-of-way	acres	83.2	64.2
Constructability / Maintenance of Traffic (MOT) During Construction			
MOT on LA 318	n/a	Construct a detour road or phase traffic and widen roadway	Construct a detour road or phase traffic and widen roadway
MOT on US 90	n/a	Construct ramps and / or frontage roads first for traffic diversion	Construct ramps and / or frontage roads first for traffic diversion
Human Environment Considerations & Estimated Impacts			
Residential Structure Impacts [2]	number	11	8[3]
Mobile Home Structure Impacts[2]	number	4	1[3]
Commercial Structure Impacts[2]	number	0	0
Caribbean Winds Parcels Impacted [2]	number	0	0
Right-of-Way Acquisition from the West St. Mary Civic Center Parcel	acres	3.4	0
Maintain Existing Access at Civic Center	Yes/No	No [4]	Yes
NRHP Eligible Standing Structures [5]	number	0	0
NRHP Eligible Archaeological Sites [6]	number	0 [6]	0
Disproportionate Environmental Justice Impacts	Yes/No	No	No
Access and Travel Time Impacts in Northwest Interchange Quadrant	Yes/No	Yes	Yes
Noise Impacts	Yes/No	Yes	Yes
Feasible & Reasonable Noise Abatement	Yes/No	No	No
Air Quality Impacts	Yes/No	No	No
Physical Environment Considerations & Estimated Impacts			
Water Wells Impacted	number	1	0
Underlain by Chicot Aquifer	Yes/No	Yes	Yes
Natural Gas Pipeline Crossings	number	6	6
Natural Gas Pipeline Terminal Impact	Yes/No	No	No

Table ES-1
Summary of Project Features and Impacts

Evaluation Criteria	Unit	Build Alternative [1]	
		E	ATC
Maintain Existing Access at Natural Gas Pipeline Terminal	Yes/No	Yes	Yes
Sewer Treatment System at West St. Mary Civic Center	Yes/No	No	No
Sewer Lift Station on the West Side of LA 318 South of US 90	Yes/No	No	No
Prime Farmland Impacted	acres	81.71	62.68
Natural Environment Considerations & Estimated Impacts			
Upland Habitat Directly Impacted	acres	2.02	1.22
Wetlands Directly Impacted	acres	0.39	0.09
Aquatic Habitat Directly Impacted	acres	1.47	1.51
100-Year Floodplains Impacted	acres	0.76	0.61
Other Waters of the US Impacted[7]	number	2	2
Scenic Streams	number	0	0
Significant Trees	number	2	2
Estimated Cost Considerations[8]			
Right-of-way Cost – Land Only	$20,000/acre	$ 1,664,000	$ 1,284,000
Residential Structure Acquisition	$150,000 ea.	$ 1,650,000	$ 1,200,000
Mobile Home Structure Acquisition	$25,000 ea.	$ 100,000	$ 25,000
Commercial Structure Acquisition	$150,000 ea.	0	0
Residential Relocation Assistance	$50,000 ea.	$ 550,000	$ 400,000
Mobile Home Relocation Assistance	$50,000 ea.	$ 200,000	$ 50,000
Estimated Construction Cost (rounded)	$ Millions	$ 64.9 M	$ 55.7 M
Total Estimated Cost (rounded)	$ Millions	$ 69.1 M	$ 58.7 M

Notes:
1. Estimated impacts are based on the interchange layouts as shown in the Appendix A Project Design Plans and are subject to change.
2. Structure and relocation impacts consider worst case scenario – a structure may not be directly impacted however the parcel may be rendered unusable or would require acquisition due to control of access.
3. The number of residential/mobile home structure impacts under the ATC could increase due to proximity of road improvement impacts.
4. The existing Civic Center driveway on LA 318 would be relocated to the Northeast Frontage Road. The existing Natural Gas Pipeline Terminal driveway on LA 318 would be relocated to the Southeast Frontage Road.
5. A potential historic structure is located in the northwest quadrant of the interchange but will not be directly impacted by any of the build alternatives. An effects determination relative to NRHP eligibility is forthcoming from SHPO.
6. A Phase I Cultural Resource Inventory has been completed for Alternative E and SHPO determined that no historic archaeological properties or historic standing structures would be impacted in a letter received August 5, 2013.
7. Other Waters of the US includes unnamed canals and tributaries.
8. Costs are based on recent Design Build Bid Results and detailed in Section 2.5 'Preliminary Implementation Cost Estimates'.

Human Environment Considerations

Both Alternative E and the ATC would require the purchase of new right-of-way, but Alternative E (83.2 acres of right-of-way) would require approximately 19 more acres than the ATC (64.2 acres of right-of-way). Although neither Alternative E nor the ATC would directly impact the West St. Mary Civic Center building, right-of-way acquisition would impact approximately 3.4

acres under Alternative E to the West St. Mary Civic Center parcel while the ATC would have no impacts. Access to the West St. Mary Civic Center would be maintained under the ATC, but would need to be relocated to the frontage road under Alternative E.

Alternative E would impact a greater number of structures (11 residences and 4 mobile homes) compared to the ATC (8 residences and 1 mobile homes). It was assumed that all residence and mobile home acquisitions would require relocation assistance. The ATC eliminates all residential impacts on the east side of US 90.

Access to non-relocated properties would be maintained through proposed frontage roads, proposed local access roads, or along portions of LA 318 where control of access restrictions do not apply. Control of access applies to LA 318, not to the same extent as on US 90; however, it still applies. Control of access allows for high-speed travel by regulating all ingress/egress traffic flow. Control of access allows for unhindered traffic flow by eliminating traffic signals, access to adjacent property and elimination of at-grade crossings with all entrances and exits to the highway provided at interchanges. Locations where control of access applies to LA 318 occur between entrance and exit ramps intersections extending to frontage road intersections. Where control of access is required, however, direct access to adjacent parcels would be prohibited. This is primarily an issue for residents in the northwest interchange quadrant under all build alternatives, where the relocation of the proposed north frontage road would affect residents' travel patterns to LA 318 and US 90. That is, residents would have to travel west on the existing frontage road / proposed access road and then backtrack on the relocated north frontage road to LA 318, thereby increasing their current travel times by 3 to 5 minutes which is considered relatively minor.

The proposed improvements are necessary at the US 90 and LA 318 interchange for the eventual upgrade of US 90 to interstate standards. The area surrounding the proposed interchange is broadly composed of minority and low-income populations (75.1% minority). Given that the composition of other populations surrounding the US 90 and LA 318 interchange is limited, impacts resulting from the proposed improvements would not be greater or more severe on minority and/or low-income populations compared to other populations. Therefore, disproportionate impacts to minority and low-income populations are not anticipated.

The project is located in an area that is in attainment for all NAAQS, and would not have an effect on air quality. Noise impacts are anticipated under both Alternative E and the ATC. Noise abatement analysis determined that noise barriers under either Alternative E or the ATC were neither feasible and/or reasonable.

Physical Environment Considerations

Similarly to Alternative E, the ATC would not impact the sewage treatment system at the St. Mary Civic Center and should avoid the sewer lift station located on the west side of LA 318 south of US 90. The Natural Gas Pipeline Terminal located in the southeast interchange quadrant would not be impacted by either Alternative E or the ATC which both require only minor utility relocations.

Prime farmland soils are widespread throughout the study area such that the acreage of prime farmland impacted by either Alternative E or the ATC is equivalent to their acres of required right-of-way minus the small pond in the southwest quadrant. As such, the ATC would impact 62.68 acres and Alternative E would impact 81.71 acres of prime farmland.

Alternative E would directly impact one water well and the ATC would not directly impact any water wells. The proposed project is underlain by the Chicot aquifer, it is not located near the major recharge zones and all necessary US Environmental Protection Agency (USEPA) and Louisiana Department of Environmental Quality (LDEQ) safeguards would be implemented to avoid impacts.

Natural Environment Considerations

In terms of effects on the natural environment, Alternative E and the ATC are very similar. There are several small unnamed tributaries that will be crossed by all alternatives, but these crossings are north of US 90 and outside the 100-year floodplain. South of US 90, the impacts to the 100-year floodplain associated with Alternative E and the ATC occur in the floodway fringe and would not increase the base-flood elevation to a level that would violate applicable floodplain regulations. While only minor impacts to the floodplain are anticipated, any drainage ditches or culverts affected by the proposed project, as well as new roadway within the 100-year floodplain, would be designed to maintain pre-construction hydrologic conditions and would not result in any substantive effect to base flood elevations of the surrounding area. Impacts to wetlands under the ATC are the least of any build alternative at only 0.09 acres while Alternative E impacts 0.39 acres of wetlands. Overall, the impacts to natural environment are all reduced under the ATC as compared to Alternative E.

Estimate of Probable Cost

During the design/build process, the teams put forth bids to construct both Alternative E and the ATC. As is shown in **Table ES-1**, the ATC is around $10 million dollars cheaper to construct and also was estimated to take over 300 fewer days to complete. This estimate is based on bid results submitted by the design/build teams. Both the cost savings and the reduced construction duration were added benefits to choosing the ATC as a preferred alternative.

Summary of Benefits

Both the ATC and Alternative E meet the purpose and need and would provide long-term benefits. The ATC and Alternative E would replace the at-grade signalized intersection with a grade-separated interchange that would enhance emergency evacuation and reduce the potential for turning movement conflicts, which may result in a reduction of crashes. Travel time savings can be realized on US 90 and LA 318 with the ATC or Alternative E, resulting in reduced vehicular operating costs for both passenger and commercial vehicle operations. Furthermore, the economic vitality of the surrounding communities would likely benefit from the improved access via LA 318 to and from the St. Mary Sugar Cooperative and the Port of West St. Mary

resulting from the proposed project. The ATC would likely result in a greater reduction to vehicular operating costs and improved economic vitality compared to Alternative E due to the ATC's interchange alignment (diamond) and ramp configuration (no loop ramp). The ATC and Alternative E would also be more beneficial for truck and tractor-trailer movement due to the bridge configuration (US 90 over LA 318). In terms of community cohesion and potential disruption, the ATC would only impact 9 residential structures, the lowest of any evaluated build alternative.

Summary of Permits and Certifications

The following permits and/or certifications are required for the proposed project upon selection of either Alternative E or the ATC:

- Authorization under the Louisiana Pollutant Discharge Elimination System (LPDES) from LDEQ for Storm Water Discharge for Construction Activities over 5 acres.
- A drainage hydraulic study will be required during design, and a development permit will be required prior to commencement of construction.
- Prior to the start of project construction, a Request for a Jurisdictional Determination by the US Army Corps of Engineers (USACE) and a Section 404 Permit for temporary and permanent impacts from construction of the proposed project for wetlands determined to be jurisdictional was needed. A permit application was filed and permit obtained as part of the 2013 FONSI. A permit modification was requested for the ATC. Commitments to minimize harm to wetlands and streams are as follows:

    1. Dredged or fill materials used for construction will be non-polluting material in accordance with USEPA Guidelines for the Discharge of Dredged or Fill material found in 40 CFR 230.
    2. All construction activity will be performed in a manner that would minimize increased turbidity of the water in the work area and otherwise avoid adverse effects on water quality and aquatic life.
    3. All dredged material not used as backfill will be placed on land, and no runoff water from the disposal site will be allowed to enter the waterway.
    4. Erosion during and after construction will be controlled as outlined in the latest edition of the LADOTD's *Standard Specifications for Highway Construction*.
    5. The project will not significantly disrupt the movement of those species of aquatic life indigenous to the water body.
    6. Temporary work ramps or haul roads, when needed, will provide sufficient waterway openings to allow the passage of expected high flows.
    7. The contractor will take precautions in the handling and storage of hazardous materials, including lubricants and fuels, to prevent discharges or spills that would result in degradation of water quality.
    8. Wetland areas will be avoided to the maximum extent practicable.

9. Wetlands outside of the construction limits will not be used for construction support activities (borrow sites, waste sites, storage, parking access, etc.) under permit by the USACE.
10. Heavy equipment working in wetlands will be placed on mats.
11. Clearing of wetlands will be limited to the minimum amount necessary for the completion of the job.
12. The contractor will be responsible for the protection of adjacent wetlands.

- Prior to construction, a Coastal Use Permit (CUP) application would need to be completed and submitted to the Coastal Management Division of the Louisiana Department of Natural Resources (LDNR). Submitting an application for a CUP does not imply that one will be required; rather the application is simply one part of the rules and procedures necessary for construction projects within the coastal zone. A prior joint permit application was filed with LDNR as part of the 2013 FONSI and obtained. A modification has been requested for the ATC.

- Approval by the St. Mary Parish floodplain manager for any modifications to the floodplain.

Summary of Commitments and Mitigation Measures

The following commitments and mitigation measures are required for the proposed project upon selection of either Alternative E or the ATC:

- Best Management Practices (BMPs): Implementation of BMPs during construction to mitigate non-point source pollution and comply with USEPA Guidance on impacts to a Sole Source Aquifer.

- Maintenance of Traffic: A construction sequencing plan will be prepared prior to construction to minimize disruption of traffic on US 90 and LA 318. Under both the ATC and Alternative E, two lanes of traffic on US 90 in both the eastbound and westbound directions should be maintained during construction of the overpass bridges. As part of the ATC, the construction of the ramps and/or frontage roads would be completed first and then used for diversion of traffic. The bridge structures for the US 90 overpass would then be constructed. Similar to portions of the ATC, the construction of the ramps and/or frontage roads for Alternative E would be completed first and then used for diversion of traffic. The bridge structures for the US 90 overpass and elevated westbound on-ramp would then be constructed. During the sugar cane harvest season, October through December, LA 318 should remain open to traffic at all times. The appropriate sequencing of construction operations and maintenance of traffic would ensure that LA 318 remains accessible. These provisions are necessary in order to avoid construction signed detours that would potentially increase travel time and vehicle operating costs.

- Permanent Signage: Channelized medians, pavement markings and signage would be installed to address all movements through the intersection and to manage driver

expectancy. Warning signs would be installed to avoid wrong way traffic on the westbound exit ramp for Alternative E. Special illuminated warning signage, using LED's or beacons, could be installed to provide greater visibility at night. Based on the traditional diamond interchange layout, the ATC would not require specialized permanent signage for any of the ramps associated with it.

- Noise: The mitigation measures that are implemented at the construction site must be determined to be necessary and would be the responsibility of the construction contractor. LADOTD may require that one or more of these measures are included as provisions to the contract documents. All mitigation measures must adhere to the latest version of the *Louisiana Standard Specifications for Roads and Bridges* and comply with state and local laws. The following potential mitigation measures would be implemented during construction to minimize adverse noise impacts if deemed necessary:

  - Locate site equipment as far from noise sensitive receptors as possible;
  - Avoid nighttime activities in residential areas where sensitivity to noise increases during the nighttime hours, but nighttime construction work can be considered in commercial areas if deemed necessary to meet project schedules and expedite construction;
  - Avoid impact pile driving where possible in noise sensitive areas by using drilled piles and sonic or quieter vibratory pile drivers where geological conditions permit; and
  - Use specially muffled equipment, such as enclosed air compressors, and mufflers on all engines.

- Air Quality: During the construction of the proposed facility, air quality impacts will be minimized, by the project contractor, through a combination of fugitive dust control, equipment maintenance, and compliance with state and local regulations.

- Hazardous Materials: During construction, any site that is found to contain hazardous materials will be remediated and all work conducted in conformance with LDEQ, USEPA, and OSHA regulations and policy.

- Right-of-Way Acquisitions and Land Use: Relocations have been minimized to the maximum extent practicable. All relocation activities would be governed by the *Federal Uniform Relocation Assistance and Real Property Acquisition Policies Act 0f 1970*. Construction of the project will not begin until decent, safe, and sanitary replacement housing is in place and offered to all affected persons. Home owners will be eligible for replacement housing and moving expense payments. Owners may also be eligible for an additional payment to provide comparable housing and to assist with the increased costs of a new mortgage and incidental expenses incurred. Displaced persons, businesses, farms, and nonprofit organizations are eligible for reimbursement for actual reasonable moving costs, as well.

- Utility Relocations: During the design phase of the project, the design/build contractor will coordinate the proposed roadway improvements with impacted utility companies.

- Archaeological Findings: A Phase I cultural resource survey and inventory was conducted in August 2015, for the LADOTD at a proposed grade-separated interchange at the intersection of US Highway 90 (US 90) and LA Highway 318 (LA 318), in St. Mary Parish, Louisiana. The results of the survey were submitted to the SHPO for review and concurrence. AECOM recommends that no additional cultural resources investigations be required within the remaining surveyed portions of the proposed grade-separated interchange at the intersection of US Highway 90 (US 90) and LA Highway 318 (LA 318), given that no other cultural resources were identified in these areas. Coordination with SHPO is ongoing.

- Plants and Wildlife Protected by Law: The threatened Louisiana black bear may occur in the general project area. In its solicitation of views response letter, the US Fish and Wildlife Service (USFWS) recommends the following measures to minimize impacts to the Louisiana black bear and its critical habitat:

  - If construction is to be performed during the denning season (December through April) or if bald cypress or tupelo gum tress with 36 diameter at breast height or greater will be removed or destroyed, further consultation with the USFWS will be necessary; and
  - Construction workers are strongly urged to avoid bears, if work is to be performed during the non-denning season (April through December). Workers should not leave food or garbage in the field and bear proof garbage containers are recommended.

- Protection of Trees: Protection of Trees: In accordance with EDSM No. I.1.1.21, care should be taken to avoid damage to four significant trees located in the northwest, southwest and southeast quadrants of the interchange. The two significant trees located in the southwest quadrant are located between the future exit ramp and US 90 overpass under both the ATC and Alternative E. The two trees are located far enough from the proposed travel lanes so that they could be left in place. Two significant trees would be impacted by the project, one tree located in the southeast quadrant would be directly impacted by the eastbound entrance ramp and the second tree is in the northwest quadrant, near the proposed cul-de-sac for the existing service road.

  - During construction, the significant trees in the southeast quadrant (located at 29.864360, -91.631258) and in the northwest quadrant (29.867415, -91.633273) would be removed. The trees shall be marked and approved by the project engineer before removal by the contractor. The Design-Build contractor shall notify LADOTD Environmental Section 4 weeks prior to the removal of the tree to allow for public notification.
  - In order to protect the significant trees in the southwest quadrant (located at 29.866805, -91.635185 and 29.866687, -91.635149), the Design-Build contractor shall install tree protection fencing (as per special detail LD-02, which shall be part of the plans) around the two live oak trees to avoid damage during construction of the proposed interchange and demolition of the existing service road. In the southeast

quadrant, an additional, smaller live oak tree located at 29.864828, -91.630931 shall also be treated as described above. The protected trees shall be identified in the plan and profile sheets.

- In the event that the trees would require pruning, a licensed arborist (with qualifications as described in NS-201-00004) shall be contracted.
- During construction, two additional trees would be removed to allow for pavement widening on LA 318. These trees are smaller live oak trees that do not qualify for the LADOTD designation as significant trees. One tree is located north of US 90 at 29.867868, -91.632617, and the second is located south of US 90 at 29.864529, -91.635223.

This Page Intentionally Left Blank

CHAPTER 1.0

1.0 INTRODUCTION AND PURPOSE AND NEED

1.1 Project Description

The Louisiana Department of Transportation and Development (LADOTD) is proposing to construct a grade-separated interchange at the intersection of US Highway 90 (US 90) and Louisiana Highway 318 (LA 318). A line and grade study and environmental assessment (EA) were prepared to develop potential interchange concepts and to determine the environmental impacts associated with the proposed project. This supplemental EA is the result of changes to the preferred alternative that were developed during the design/build process. The Federal Highway Administration (FHWA) is the lead Federal agency for the project.

A full project description is located in the Final EA/ Finding of No Significant Impact (FONSI) from October 2013.

1.2 Project History

The project history is detailed in the Final EA/FONSI from October 2013.

1.3 Requirements for this Study

The requirements for this study are detailed in the Final EA/FONSI from October 2013.

Based on the environmental analysis that had been conducted, the LADOTD and FHWA identified a preferred alternative. Selection of the preferred alternative was identified following agency and public review of the Draft EA, and upon the review and evaluation of public hearing comments received on the Draft EA. A FONSI was issued by the FHWA in October 2013. This supplemental EA is being prepared to compare the expected impacts from the preferred alternative from the October 2013 EA/FONSI (Alternative E) and the Alternative Technical Concept (ATC) as identified in the design/build process. A public meeting has been held to present the ATC to the public and allow for comments. A FONSI will be issued by the FHWA, if it is determined that the ATC will not have significant environmental impacts. The FONSI will include commitments and mitigation measures that are intended to reduce or mitigate any unavoidable adverse impacts.

1.4 Proposed Action

The proposed project includes upgrading the existing US 90 and LA 318 signalized intersection to a full control of access, grade-separated interchange, including the reconstruction of the US 90 frontage roads, to provide local access to LA 318.

As a result of the comments received at the June 26, 2012 Public Hearing, a new build alternative was developed to further reduce impacts to residences in the study area. The new build alternative was a combination of two build alternatives previously considered.

- Alternative E: A combination partial cloverleaf (one loop ramp) and diamond interchange with US 90 overpass.

The project was selected to proceed as a design/build and during that process the design team proposed several modifications to the preferred alternative (Alternative E). This revised alternative is identified as the ATC and further reduces impacts while lowering construction costs.

- ATC: A modified diamond interchange with US 90 overpass.

An overview of the alternatives analysis process and a detailed description of the preferred alternative are presented in **Chapter 2**.

1.5 Purpose and Need

Upgrading US 90 as part of the proposed future corridor for I-49 South, improving connectivity and system linkage, and improving mobility are all key aspects of the proposed project's purpose and need. In order for US 90 to achieve interstate status, it would have to be upgraded to a full control of access highway throughout its limits. Control of access allows for high-speed travel by regulating all ingress/egress traffic flow. Control of access allows for unhindered traffic flow by eliminating traffic signals, access to adjacent property, and at-grade crossings, with all entrances and exits to the highway provided at interchanges. The sections of US 90 immediately east and west of the project currently have full control of access and this proposed intersection improvement would satisfy the intersection requirements for interstate corridor criteria within the project study area.

Within the study area, US 90 is a four-lane divided highway. LA 318 is a two-lane undivided roadway and is classified as a rural major collector that connects LA 182 and US 90. The location of the intersection of US 90 and LA 318 is a key factor in its use by heavy traffic involved in industrial and commercial commodities transport. By improving the US 90 and LA 318 intersection, large truck and tractor-trailer traffic would continue to utilize LA 318 rather than adjacent routes to the east or west that would divert traffic through school zones or along two-lane frontage roads in the communities of Jeanerette and Baldwin that are not designed to accommodate heavy truck traffic.

An existing condition (2010) and future design year (2035) intersection capacity analysis was conducted for the existing at-grade signalized intersection of US 90 and LA 318 as part of the EA. The proposed project would seek to decrease peak hour traffic delays, increase roadway capacity, and improve overall mobility.

A full analysis of the purpose and need for the project is located in the Final EA/FONSI from October 2013.

CHAPTER 2.0

2.0 ALTERNATIVES CONSIDERED

The National Environmental Policy Act (NEPA) requires that all reasonable alternatives that could achieve the purpose and need for the project be considered. The alternatives development process, including the development of conceptual alternatives, refinement of the build alternatives, and selection of a preferred alternative, is detailed in the Final EA/FONSI from October 2013. The project was selected to proceed as a design/build and during that process the design team proposed several modifications to the preferred alternative (Alternative E). The following discusses the process to develop the ATC.

2.1 Alternatives Evaluated in this EA

As a result of public input and comments received at the July 17, 2012 Public Hearing, a new build alternative was developed and identified as Alternative E. Alternative E was evaluated in terms of impacts and compared against Alternative B and Alternative D from the Public Hearing and was selected as the preferred alternative in the Final EA/FONSI from October 2013. Alternative E is described below.

During the design/build process, the design team proposed several modifications to the preferred alternative (Alternative E), and a new build alternative was developed. The environmental effects of the ATC is evaluated and compared against Alternative E in this EA and is also described below.

Alternative E

The interchange configuration for Alternative E is presented in **Figure 2-1** and combines design elements from Alternatives B and D as described in the October 2013 Final EA/FONSI. Alternative E consists of an overpass structure along US 90 that spans over LA 318, as presented in Alternative B, in combination with the grade-separated, partial cloverleaf (one loop ramp) and diamond interchange as presented in Alternative D.

Under Alternative E, US 90 would be elevated over LA 318. Separate bridges would be required for the US 90 eastbound and westbound travel lanes over LA 318. Each bridge would be 40 feet wide and approximately 1,894 feet long. The bridges would be constructed within the existing US 90 right-of-way.

As part of the interchange configuration, the loop ramp would be constructed in the northeast quadrant of the interchange. The loop ramp would serve as the US 90 westbound entrance ramp and would be accessed by way of LA 318 just south of the West St. Mary Civic Center. A diagonal westbound exit ramp from US 90 to LA 318 was also proposed in this quadrant of the interchange. At LA 318, the loop entrance ramp and diagonal exit ramp would form a "T" intersection with LA 318.

The proposed alignment for the two-way frontage road is located north of the existing residential area that fronts the existing frontage road. The new frontage road would extend approximately

one mile to the west of LA 318 before connecting to the existing frontage road. The existing frontage road would serve as a proposed local access road and would tie into the proposed two-way frontage road on the west end, forming a "T" intersection. On the east end, the existing frontage road / proposed local access road would extend to just west of LA 318, on the east side of Caribbean Winds subdivision, and terminate at a turnaround or cul-de-sac. The existing median crossover on US 90 located near Landry's Seafood House, the Silver Fox Casino, and Landry's Auto Truck Stop would be removed to provide full control of access on US 90.

Due to intersection spacing requirements, direct access from LA 318 to the properties in the northwest quadrant of the interchange along the existing frontage road would be removed. The existing frontage road / proposed local access road would terminate with a cul-de-sac that would accommodate both local traffic and garbage collection vehicles. Emergency responders and residents would access the subdivision by turning west from LA 318 onto the new frontage road, then turning onto the proposed access road.

Just east of LA 318, the loop entrance ramp and diagonal exit ramp would be constructed parallel to each other, where opposing ramp traffic movements would be separated by a 14-foot depressed median (measured from edge of shoulder to edge of shoulder). The distance between the edge of the travel lane to the edge of the travel lane would be 30 feet. The parallel ramp alignment configuration would extend approximately 600 feet east of LA 318 to a point where the ramps begin to diverge. On the south side of US 90, diagonal exit and entrance ramps would be located on the southwest and southeast quadrants of the interchange, respectively.

In the southeast quadrant of the interchange, the existing frontage road would be removed, thus eliminating access to Sorrell Road from the frontage road. This portion of Sorrell Road is an unpaved farm road, and there would be no connection to the new frontage road under any of the build alternatives. The paved portion of Sorrell Road, which parallels LA 318, ends east of the existing gas pipeline terminal. For local traffic and emergency vehicles, Sorrell Road can be accessed from LA 318 via Jones No. 1 Road or from Big 4 Corners Road.

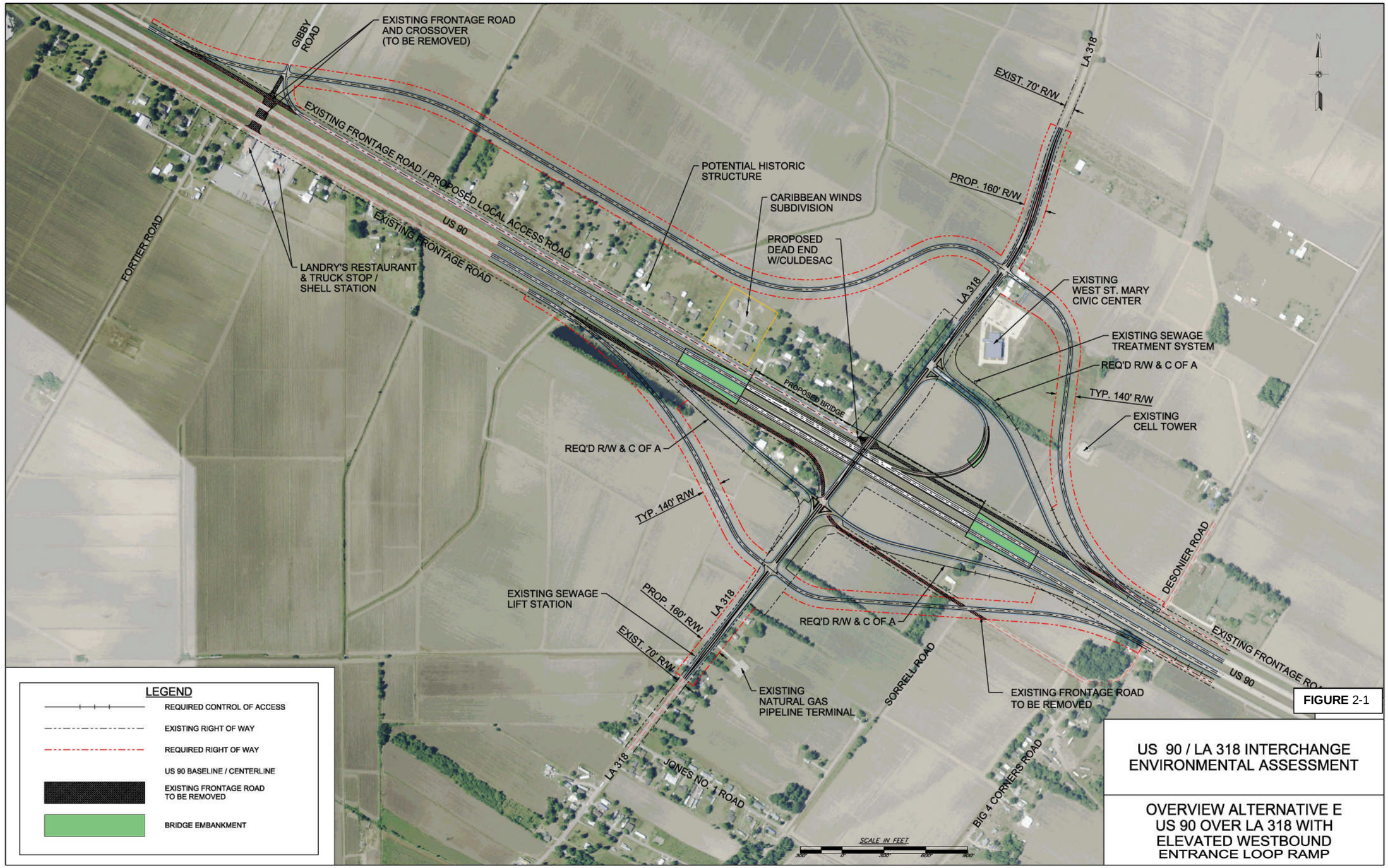

FIGURE 2-1

US 90 / LA 318 INTERCHANGE
ENVIRONMENTAL ASSESSMENT

OVERVIEW ALTERNATIVE E
US 90 OVER LA 318 WITH
ELEVATED WESTBOUND
ENTRANCE LOOP RAMP

This Page Intentionally Left Blank

In Alternative E, both of the US 90 ramp junctions and frontage road intersections at LA 318 would operate under stop-controlled conditions, i.e. either a signal or stop sign at the ramp junctions and frontage road intersections. Additional improvements would include widening LA 318 in the vicinity of the proposed interchange, providing exclusive left-turn lanes at the frontage road and ramp intersections, and an exclusive right-turn lane for northbound LA 318 traffic turning right onto the US 90 westbound entrance loop ramp. Portions of the existing frontage roads located north and south of US 90 would be removed. The existing driveway from LA 318 to the Natural Gas Pipeline Terminal would remain at its existing locations. The existing driveway for the West St. Mary Civic Center would be relocated from LA 318 to the northeast quadrant frontage road due to control of access on LA 318.

Alternative Technical Concept

The interchange configuration for the ATC is presented in **Figure 2-2**. The ATC consists of a grade-separated, combination rural/urban diamond interchange with an overpass structure along US 90 that spans over LA 318. Diamond interchanges are the simplest and most common type of interchange. This configuration is similar to Alternative B, except that the ramps on the north side of US 90 (westbound) are located between the proposed westbound mainline overpass structure on US 90 and the existing north frontage road (NE Quadrant, to be removed) and the Local Access Road (NW Quadrant). The configuration on the north side is more similar to an urban diamond interchange. The configuration on the south side is similar to Alternative E and is a typical rural diamond interchange.

The diamond or diagonally configured entrance and exit ramps would provide relatively high speed access from US 90 to LA 318, consistent with the posted speed limit for all vehicle types. The original LADOTD design guidelines, which required the ramps to intersect with LA 318 approximately 400 feet to the north and south of the existing centerline of US 90, would need to be waived for this alternative. The minimum distance between the ramps and proposed frontage roads would still be approximately 600 feet.

Under the ATC, US 90 would be elevated over LA 318. Separate bridges would be required for the US 90 eastbound and westbound travel lanes over LA 318. Each bridge would be 40 feet wide and approximately 1,894 feet long. The bridges would be constructed within the existing US 90 right-of-way.

The proposed alignment for the two-way frontage road is located north of the existing residential area that fronts the existing frontage road. The new frontage road would extend approximately one mile to the west of LA 318 before connecting to the existing frontage road. The existing frontage road, which would serve as a proposed local access road, would tie into the proposed two-way frontage road on the west end, forming a “T” intersection. On the east end, the existing frontage road / proposed local access road would terminate just west of the Caribbean Winds subdivision at a proposed cul-de-sac. The existing median crossover on US 90 located near Landry’s Seafood House, the Silver Fox Casino, and Landry’s Auto Truck Stop would be removed to provide full control of access on US 90.

Due to intersection spacing requirements and the new westbound on-ramp, direct access from LA 318 to the properties along the existing frontage road (proposed local access road) would be removed. The proposed cul-de-sac on the east end would accommodate U-turns by both local traffic and garbage collection vehicles. Emergency responders and residents would access the subdivision by turning west from LA 318 onto the new frontage road, and then turning onto the proposed access road.

In the southeast quadrant of the interchange, the existing frontage road would be removed, thus eliminating access to Sorrell Road from the frontage road. This portion of Sorrell Road is an unpaved farm road, and there would be no connection to the new frontage road under any of the build alternatives. The paved portion of Sorrell Road, which parallels LA 318, ends east of the existing gas pipeline terminal. For local traffic and emergency vehicles, Sorrell Road can be accessed from LA 318 via Jones No. 1 Road or from Big 4 Corners Road.

Both of the US 90 ramp junctions and frontage road intersections at LA 318 would operate under stop-controlled conditions, i.e. either a signal or stop sign at the ramp junctions and frontage road intersections. Additional improvements would include widening LA 318 in the vicinity of the proposed interchange and providing exclusive left-turn lanes at the frontage road and ramp intersections. Portions of the existing frontage roads located north and south of US 90 would be removed.

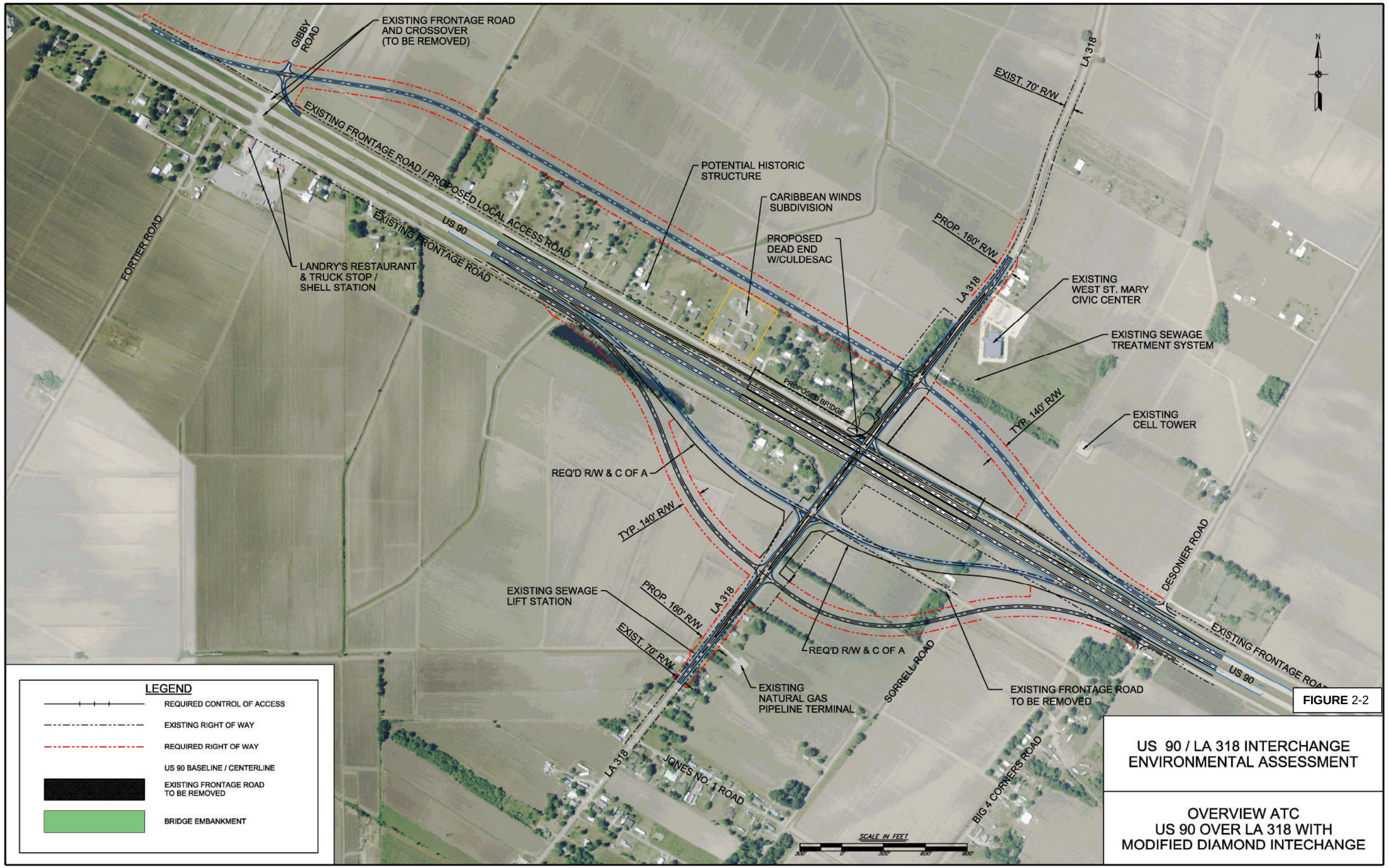

FIGURE 2-2

US 90 / LA 318 INTERCHANGE
ENVIRONMENTAL ASSESSMENT

OVERVIEW ATC
US 90 OVER LA 318 WITH
MODIFIED DIAMOND INTECHANGE

This Page Intentionally Left Blank

Interchange Design Features

Table 2-1 provides a brief summary of interchange design features and operational characteristics associated with Alternative E and the ATC.

Table 2-1
Comparison of Build Alternative Interchange Design and Operational Features

Evaluation Criteria	Build Alternative	
	E	**ATC**
Interchange Alignment and Right-of-Way Considerations		
Interchange Type - Rural	Combination Partial Cloverleaf and Diamond	Diamond
Ramp Configuration / Location	One Loop Ramp and 3 Diamond / Diagonal Ramps Constructed in 3 Quadrants	Diamond/Diagonal Ramps Constructed in 4 Quadrants
Grade- Separation	US 90 over LA 318	US 90 over LA 318
Bridge Configuration	US 90 – Double Structure	US 90 – Double Structure
Bridge Length (approximate)	1,894 feet each	1,894 feet each
Bridge Width [1]	40 feet each	40 feet each
Estimated Bridge Cost [2]	$18.2 million	$16.1 million
Estimated Construction [3]	$64.9 million	$55.7 million
Comparison of Magnitude of Right-of-Way	Greater Due To Loop Ramp Geometry	Reduced Due to Typical Diamond
Estimated Required Right-of-Way	83.2 acres	64.2 acres
Operational Features		
Driver Expectancy Relative to Entrance & Exit Ramp Locations	Less Prevalent With Loop Ramp	More Common with Typical Diamond
Ramp Speed for Vehicle Types [4]	Loop Ramp: Lower Speed For Large Trucks and Tractor-Trailers	Diamond Ramp: Relatively High Speed for all Vehicles
LA 318 at Ramp Intersection Turning Movement Conflicts	Two-Way Ramp: 2 Turning Movement Conflicts [5]	One-way Ramp: 1 Turning Movement Conflict [6]

Notes:
1. Bridge width is from face to face of bridge rails and equal to roadway width.
2. Bridge construction cost estimate presented for order of magnitude informational purposes only. Estimated construction cost does not include right-of-way or relocations. See **Section 2.5** for total interchange cost estimate.
3. Costs are based on recent Design/Build Bid Results.
4. Ramp speed would be consistent with the posted speed limit.
5. For two-way ramp, turning movement conflicts would consist of: 1) southbound through movement traffic on LA 318 opposed by left-turn movement traffic from the exit ramp, and 2) northbound through movement traffic on LA 318 opposed by left-turn movement traffic onto the entrance ramp.
6. For one-way ramp, turning movement conflict would consist of through movement traffic on LA 318 opposed by left-turn movement traffic onto the entrance ramp.

2.2 Preferred Alternative

The final phase of the alternatives development process is the selection of a preferred alternative by the FHWA and LADOTD. As a result of public input and comments received at the July 17, 2012 Public Meeting and during the 2013 EA 30-day comment period, a new build alternative was developed. Alternative E was a combination of both Alternative B and Alternative D, but with fewer overall residential impacts. Since Alternative E achieved all of the positive benefits

of either Alternative B or Alternative D but with less residential relocations, it was identified as the preferred alternative by FHWA and LADOTD in a Final EA/FONSI issued in October 2013.

During the subsequent design/build process, the ATC was developed and is being evaluated in this Supplemental EA. The ATC achieved all of the positive benefits of Alternative E with less residential relocations, less wetland impacts, and reduced overall impacts, and is now identified as the preferred alternative. Public input and comments were received at the August 27, 2015 Public Meeting and associated 10-day comment period. After distribution of the Supplemental EA and during the subsequent 30-day comment period the public again had an opportunity for input. Once all of the comments from these two periods have been received, responded to, and incorporated into the decision process, an alternative is selected as the alignment to build and the FHWA will issue a FONSI. The selection of the new preferred alternative takes into consideration the environmental effects of each alternative, cost, public opinion, and a number of other factors that are summarized in **Chapter 4**.

2.3 Roadway Design Guidelines

The Louisiana Department of Transportation and Development's current roadway design guidelines associated with the proposed improvements are presented in **Table 2-2**. Design guidelines are presented for a rural freeway (F-3), rural freeway entrance and exit ramps, and rural collectors (RC-2 for LA 318 and RC-3 for frontage roads). In addition to the design guidelines presented in **Table 2-2**, LADOTD speed-lane change standard plans SC-01 and/or SC-02 shall govern the design of the entrance and exit ramps.

Control of Access and Associated Access Impacts

For informational purposes "control of access" refers to the regulation of public access rights to and from properties abutting the highway. With full control of access, preference is given to through traffic by providing access connections with selected public roads only and by prohibiting crossings at-grade and direct private driveway connections. (*A Policy on Geometric Design of Highways and Streets,* AASHTO, 2004).

Control of access is important because it defines where vehicular access can and cannot connect to a portion of an interchange roadway system, including entrance and exit ramps. The location of the westbound entrance ramp control of access limit in the northwest quadrant of Alternatives E and the ATC will restrict access to all parcels of land / residential property beginning at the Caribbean Winds subdivision and extending eastward to LA 318.

Table 2-2
Roadway Design Guidelines

Route		US 90	US 90 Ramps	US 90 Ramps	LA 318	Frontage Road
Item	**Units**	**Rural Freeway F-3** [1]	**Freeway Entrance and Exit Ramps**	**Loop Ramp**	**Rural Collector RC-3**	**Rural Collector RC-2**
Design Speed	MPH	70	40-50 [21]	30 [21]	60	50-60 [17, 21]
Level of Service		B	N/A	N/A	N/A	N/A
Average Daily Traffic		N/A	N/A	N/A	Over 2,000 [13]	400 – 2,000 [13]
Number of Travel Lanes		4	1	1	2 to 4 [14]	2
Width of Travel Lane	Feet	12	15	15	12	11 – 12 [18]
Width of Shoulders (Where Used) Inside on multilane facilities Outside	 Feet Feet	 6 [2] 10 [3]	 6 [22] 10	 6 [22] 10	 4 8	 N/A 4 – 5 [19]
Type of Shoulders		Paved	Paved [22]	Paved [22]	Aggregate (2' min paved) [15]	Aggregate (2' min paved)
Width of Median (minimum) (A) Depressed (B) Raised (C) Two Way Left Turn Lanes (D) Continuous Barrier (4 lane) Continuous Barrier (6 lane)	Feet	 72 (min) [25] – 100 (des) N/A N/A 15 [4] 27 [4]	 N/A N/A N/A N/A N/A	 N/A N/A N/A N/A N/A	 42 (min) – 60 (des) N/A N/A N/A N/A	 N/A N/A N/A N/A N/A
Fore Slope (vertical – horizontal)		1:6	1:6	1:6	1:6	1:4
Back Slope (vertical – horizontal)		1:4	1:4	1:4	1:4	1:4
Pavement Cross Slope	(%)	2.5	2.5	2.5	2.5	2.5
AASHTO K-Value (Crest –Minimum) /(speed) AASHTO K-Value (Crest – Desirable) ASSHTO K-Value (Sag - Minimum) /(speed)		247 (min) 436 (des) [24] 181	44 / (40); 84 / (50) - 64/ (40); 96 / (60)	19 - 37	151 - 136	84/ (50); 151 / (60) - 96/ (50); 136 / (60)
Maximum Superelevation [5]	%	10	8	8	10	10
Minimum Radius [6] (With 10% Superelevation)	Feet	1,700			1,100	700 [20]
Minimum Radius [23] (With 8% Superelevation)	Feet		444 (40 mph) [23] 758 (50 mph) [23]	214 (30 mph) [23]		
Maximum Grade	(%)	3 [7]	3	3	5	6 (50 mph) 5 (60 mph)
Minimum Vertical Clearance	Feet	16.5	16.5	16.5	16.5	16.5

Table 2-2
Roadway Design Guidelines

Route		US 90	US 90 Ramps	US 90 Ramps	LA 318	Frontage Road
Item	**Units**	**Rural Freeway F-3 [1]**	**Freeway Entrance and Exit Ramps**	**Loop Ramp**	**Rural Collector RC-3**	**Rural Collector RC-2**
Width of Right-of-Way (A) Depressed Median (B) Median Barrier (C) Min. from Edge of Bridge Structure	Feet	 Varies [9] As Needed 15 – 20 [10]	 N/A N/A N/A	 N/A N/A N/A	 N/A N/A N/A	 N/A N/A N/A
Minimum Clear Zone (From Edge of Travel Lane)	Feet	34 [11]	34 [11]	34 [11]	30	26 (50 mph) 32 (60 mph)
Bridge Design Live Load [12]		AASHTO	AASHTO	AASHTO	AASHTO	AASHTO
Width of Bridge (Min.) (Face to Face Bridge Rail)		Roadway Width	Roadway Width	Roadway Width	Roadway Width	Roadway Width

Source: LADOTD Minimum Design Guidelines, December 2009

1. These guidelines may be used in urban areas.
2. Four feet to be paved, 10 feet to be paved on 6-lane facilities, 12 feet to be paved on 6-lane facilities with truck DDHV greater than 250.
3. Twelve feet paved when truck DDHV is greater than 250.
4. For larger medians two barriers may be required. The maximum offset of 15 feet from barrier to edge of travel lane shall not be exceeded.
5. In Districts 04 and 05, where ice is more frequent, superelevation should not exceed 8 percent from the AASHTO e_{max} = 10% table.
6. It may be necessary to increase the radius of the curve and/or increase shoulder width (maximum of 12 feet) to provide adequate stopping sight distance on structure.
7. Grades 1 percent higher may be used in urban areas.
8. An additional 6 inches should be added for additional future surfacing. Seventeen feet is required for trusses and pedestrian overpasses.
9. As needed for urban projects: 300 feet to 330 feet for rural projects depending on median width.
10. Twenty-five feet shall generally be provided in accordance with EDSM II.1.1.1.
11. For 1:6 Fore Slope.
12. LRFD for bridge design.
13. Current traffic may be used to determine the appropriate classification.
14. For rolling terrain, limited passing sight distance, and high percentage trucks, further analysis should be made to determine if additional lanes are required when ADT is above 7,000.
15. For ADT of 5,000 or greater, a minimum of 4-foot must be paved.
16. Where the roadway dips to pass under a structure, a higher vertical clearance may be necessary. An additional 6 inches should be added for additional future surfacing.
17. The design speed may not be less than the posted speed of the overall route.
18. For design speeds greater than 50 mph and ADT greater than 1,500, use 12-foot lanes.
19. For ADT greater than 1,500, use 6-foot shoulders.
20. Radius based on 50 mph. The radius for 60 mph is shown under the RC-3 classification.
21. A design speed of 50 mph is used for the ramp gore areas, a design speed of 40 mph is used along ramp alignments, and a design speed of 30 mph is used for ramp and frontage road intersection approaches.
22. For entrance and exit ramps, the inside shoulder should consist of 2 feet of paved shoulder from the inside edge of the ramp travel lane. The remaining 4 feet of the inside shoulder should consist of aggregate.
23. The maximum superelevation on the entrance and exit ramps is based on the ASSHTO $e_{max=}$ 8% tables per LADOTD request.
24. The desirable K-Value of 436 is for US 90 Roadway only, use the minimum K-Value of 247 for Bridge vertical geometry.
25. A design exception may be required if the median is less than 72 feet.

As shown in **Figure 2-2**, only those parcels that directly front the existing frontage road / proposed local access road west of the proposed turnaround will be able to connect with the existing roadway network. The impacts resulting from control of access restrictions are further described in **Section 3.4**.

Context Sensitive Solutions and Design

Context sensitive solutions (CSS) and context sensitive design (CSD) are collaborative, interdisciplinary approaches that involve all stakeholders in providing a transportation facility that fits its setting. It is an approach that leads to preserving and enhancing scenic, aesthetic, historic, community, and environmental resources, while maintaining safety, mobility, and infrastructure conditions.

Public comments and information acquired from the public and key stakeholders enhanced the Project Team's awareness of environmental conditions in the project area and the desire to select an acceptable alternative for this project. Consideration of CSS and CSD were given during the development of the conceptual alternatives. Frontage road alignment revisions were included in the refinement of the conceptual alternatives that were intended to minimize or avoid residential impacts and to maintain community cohesion by minimizing the subdivision of property or segregation of neighborhoods.

2.4 Conceptual Engineering Design Layouts

Typical roadway sections and plan / profile sheets were developed for the build alternatives. **Appendix A,** which contains the draft Project Design Plans**,** presents the conceptual engineering details for the ATC. Based on the proposed typical roadway and bridge sections, in combination with LADOTD design guidelines, geometric details of interchange components are presented in the Project Design Plans in **Appendix A** including the US 90 and LA 318 bridges, ramps, frontage roads, and widening of LA 318. The horizontal geometry for interchange components are presented within the plan / profile sheets that were developed at a scale of 1 inch = 100 feet.

2.5 Preliminary Implementation Cost Estimates

Conceptual costs were developed for right-of-way and relocation/acquisition costs and the construction costs were based on bid results submitted by contractors developed for Alternative E and the ATC. **Table 2-3** provides a summary of estimated project implementation costs, which are based on recent design/build bid results and conceptual real estate costs. These design/build costs were developed by the contractors who bid on the project and represent their estimate to construct the project.

Appendix B contains a cost estimate summary showing some additional costs as outlined by LADOTD and the design/build construction estimate that were used in developing the construction cost estimates and includes items such as geotechnical, survey, utilities, right-of-

way, and procurement. Unit costs have been applied to potential structure takings / relocations; residences were estimated at $150,000 each and mobile homes were estimated at $25,000 each.

Structure acquisition costs and relocation assistance costs are detailed in **Section 3.1** and a stand-alone report entitled *Conceptual Stage Relocation Plan, US 90 and LA 318 Interchange, St. Mary Parish, Louisiana* (AECOM, October 2015). Below is a summary of the structure acquisition costs and relocation assistance costs, which have also been incorporated into the total implementation cost estimate. As shown in **Table 2-3**, the total estimated costs are approximately $69.1 million for Alternative E and $58.8 million for the ATC.

Table 2-3
Preliminary Project Implementation Cost Estimate[1]

Cost Component	Alternative E	ATC
Right-of-Way Cost – Land only	$ 1,664,000	$ 1,284,000
Residential Structure Acquisitions [2]	$ 1,650,000	$ 1,200,000
Mobile Home Structure Acquisitions [2]	$ 100,000	$ 25,000
Commercial Structure Acquisitions [2]	0	0
Relocation Assistance [2]	$ 750,000	$ 450,000
Estimated Construction Cost	$ 64,902,031	$ 55,718,840
Total Estimated Cost	**$69,066,031**	**$58,677,840**
Total Estimated Cost (rounded)	**$ 69.1 Million**	**$ 58.7 Million**

Notes:
1. Costs based on recent design/build bid results.
2. As summarized within the *Conceptual Stage Relocation Plan* for the project.

CHAPTER 3.0

3.0 AFFECTED ENVIRONMENT AND IMPACTS

A detailed description of the affected environment for each resource can be found in the Final EA/FONSI from October 2013.

3.1 Land Use and Relocation Impacts

Implementation of Alternative E or the ATC would result in the conversion of existing land uses into transportation right-of-way. Conversion from naturally wooded lands, agricultural lands, pond, and developed lands used for residential, institutional, and commercial purposes to transportation right-of-way was evaluated for both Alternative E and the ATC, and the results are summarized in **Table 3-1.**

Table 3-1
Land Use Impacts by Alternative and Type

Land Use	Alternative E		ATC	
	Acres	Percentage of Proposed Right-of-Way	Acres	Percentage of Proposed Right-of-Way
Developed	9	11%	5	8%
Natural	2	2%	1	2%
Agricultural	71	86%	51	88%
Pond	1	1%	1	2%
Total	**83**	**100%**	**58**	**100%**

Consistency with Existing Land Use and Other Plans

The ATC would be the same as Alternative E described in the Final EA/FONSI from October 2013 regarding consistency with existing land use and other plans.

Structure Impacts and Relocations

A complete analysis of structure acquisition and relocation impacts is detailed within the stand-alone report entitled *Conceptual Stage Relocation Plan, US 90 and LA 318 Interchange, St. Mary Parish, Louisiana* (AECOM, October 2015)**.** A brief summary of structure acquisition and relocation impacts is detailed in the Final EA/FONSI from October 2013.

Table 3-2 gives the estimated total number of main structures and the associated structure type that would potentially be impacted by Alternative E and the ATC. Note that structure acquisition impacts were determined under "worst case scenario" right-of-way acquisition conditions (i.e., structure impacted, the parcel is rendered unusable, and/or residential structures located on land-locked parcels created by control of access are also assumed to be impacted). Relocation impacts were determined based on the occupancy status of structures that would be acquired.

Table 3-2
Estimated Structure Acquisition Impacts

Structure Type	Build Alternative	
	Alternative E	**ATC**
Residential	11	8
Mobile Home	4	1
Commercial	0	0
Total	**15**	**9**
Primary Reason for Structure Acquisition		
Required Right-of-Way	14	9
Control of Access	1	0
Total	**15**	**9**

The total number of structure acquisition impacts is reduced with the ATC (9 structures) compared to Alternative E (15 structures). The following is a summary of structure acquisition and relocation impacts associated with Alternative E and the ATC.

- **Alternative E:** Of the 15 total structure acquisitions for Alternative E, 11 are residential structures and four are mobile homes. Field review (conducted January and May 2011) determined that all of the acquired residential structures appeared to be occupied. Fourteen (14) of the 15 acquisition impacts would result from right-of-way take, and one would result from control of access. Under Alternative E, 7 of the acquired residential structures are of frame construction, 2 are brick veneer, and 2 are manufactured homes.
- **ATC:** Of the 9 total structure acquisitions for the ATC, 8 are residential structures and 1 is a mobile home. All 9 acquisition impacts would result from right-of-way take. Under the ATC, 6 of the acquired residential structures are of frame construction and 2 are manufactured homes. **Figure 3-1** shows the location of the potential relocations under the ATC.

Relocation Assistance

All relocation activities are governed by the Federal *Uniform Relocation Assistance and Real Property Acquisition Policies Act of 1970* (Public Law 91-646) as needed, which ensures that decent, safe, and sanitary replacement housing will be provided for all displaced persons. The program is designed to provide assistance to displaced persons in relocating to a replacement property in which to live or do business. Relocation resources are available to all residential relocates without discrimination. If necessary, LADOTD will provide housing of last resort to accommodate difficult or special residential displacements, which may involve the use of other methods of providing comparable decent, safe, and sanitary housing within a person's financial means.

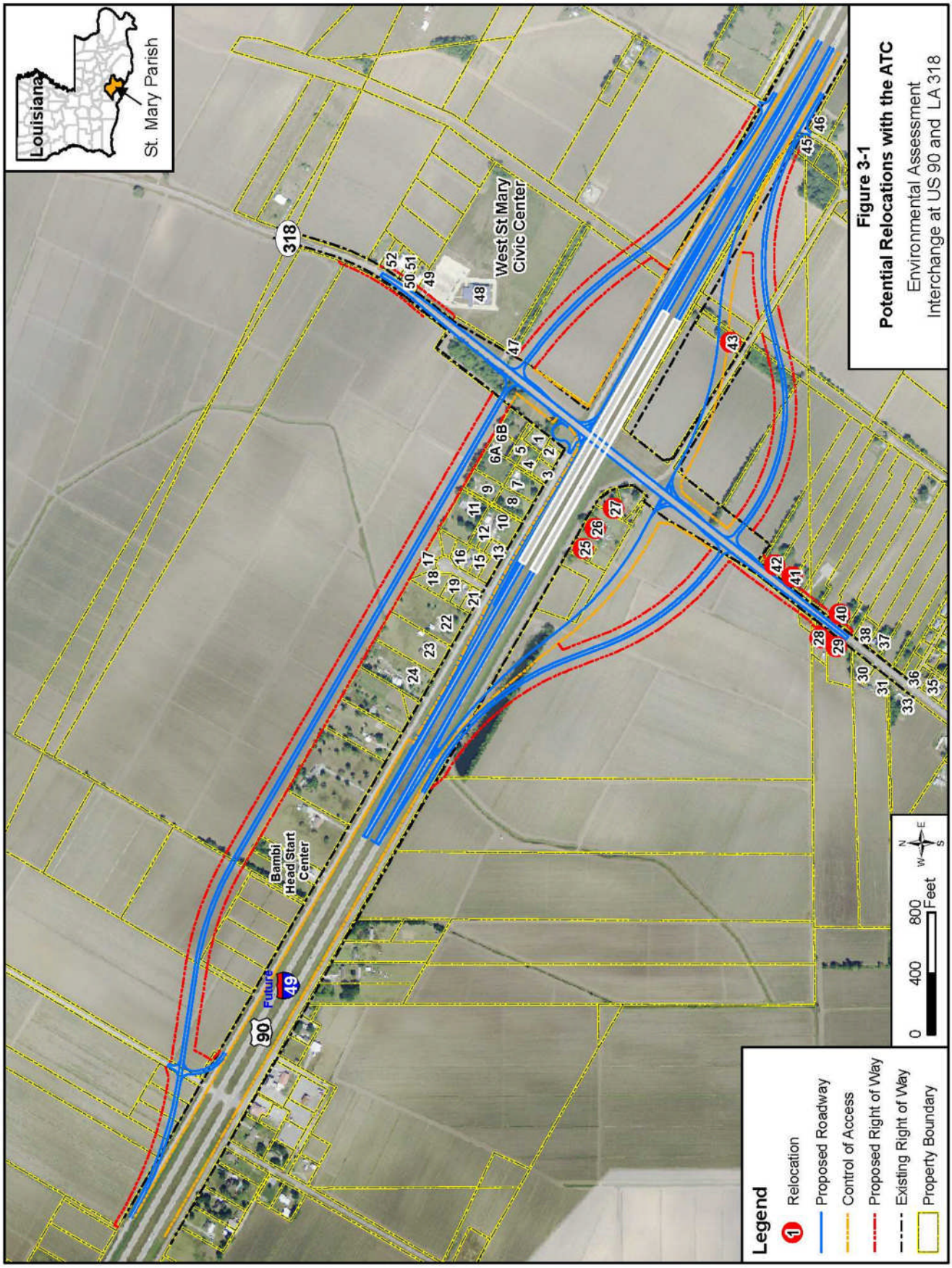
Louisiana
St. Mary Parish
Figure 3-1
Potential Relocations with the ATC
Environmental Assessment
Interchange at US 90 and LA 318
West St Mary Civic Center
Bambi Head Start Center
318
90
49
Future
Legend
Relocation
Proposed Roadway
Control of Access
Proposed Right of Way
Existing Right of Way
Property Boundary
0
400
800
Feet

3.2 Demographics and Environmental Justice

Executive Order (EO) 12898, *Federal Actions to Address Environmental Justice in Minority Populations and Low-Income Populations* (February 11, 1994), requires that Federal agencies consider and address disproportionate adverse environmental and human health effects of proposed Federal projects and programs on minority and low-income populations. EO 12898 reinforces the importance of fundamental rights and legal requirements contained in Title VI of the Civil Rights Act of 1964 and the National Environmental Policy Act of 1969. EO 12898 states:

- To the greatest extent practicable and permitted by law "…each Federal agency shall make achieving environmental justice part of its mission by identifying and addressing, as appropriate, disproportionately high and adverse human health or environmental effects of its programs, policies, and activities on minority populations and low-income populations …" and

- Each Federal agency shall conduct its programs, policies, and activities that substantially affect human health or the environment, in a manner that ensures that such programs, policies, and activities do not have the effect of excluding persons (including populations) from participation in, denying persons (including populations) the benefits of, or subjecting persons (including populations) to discrimination under, such programs, policies, and activities, because of their race, color, or national origin.

On April 15, 1997, the U.S. Department of Transportation (USDOT) issued DOT Order 5610.2 on Environmental Justice with the intention of integrating the goals of EO 12898 into USDOT actions. The following definitions were included in the DOT Order:

- **Minority** was defined as a person who is: (1) Black (a person having origins in any of the black racial groups of Africa); (2) Hispanic (a person of Mexican, Puerto Rican, Cuban, Central or South American, or other Spanish culture, regardless of race); (3) Asian American (a person having origins in any of the original peoples of the Far East, Southeast Asia, the Indian subcontinent, or the Pacific Islands); or (4) American Indian and Alaskan Native (a person having origins in any of the original people of North American and who maintains cultural identification through tribal affiliation or community recognition). Minority population was defined as any readily identifiable groups of minority persons who live in geographic proximity, and if circumstances warrant, geographically dispersed/transient persons (such as migrant workers or Native Americans) who will be similarly affected by a proposed USDOT program, policy, or activity.

- **Low-income** was defined as a person whose median household income is at or below the U.S. Department of Health and Human Services' poverty guidelines. Low-income population was defined as any readily identifiable group of low-income persons who live in geographic proximity, and, if circumstances warrant, geographically dispersed/transient persons (such as migrant workers or Native Americans) who will be

similarly affected by a proposed USDOT program, policy, or activity. For this evaluation, the term "low-income" is equivalent to, and used interchangeably with, "persons/populations below the poverty level."

The Federal Highway Administration, through FHWA Order 6640.23A, has developed an environmental justice strategy designed to assess potential impacts among minority and low-income population groups, and to instill effective public involvement strategies as to ensure substantive outreach to, and participation of, environmental justice populations (FHWA, 2006). This FHWA strategy was utilized in the determination of potential disproportionately high and adverse human health or environmental effects on environmental justice populations

As noted in the affected environment and impacts sections in the Final EA/FONSI from October 2013, the minority population in the study area is fairly substantial at 75.1%, with 41.5% of individuals reporting a disability and 32% to 34% below the poverty level. Therefore, relocations and overall impacts related to noise and access were evaluated to determine if minority or low-income populations were disproportionately impacted by the project. Public outreach was also a large component of the evaluation along with avoidance and minimization efforts.

All of the residential relocations resulting from Alternative E and the ATC are located within Census blocks reporting minority populations of 60% or greater. Based on data presented in **Table 3-3**, the ATC would impact five fewer residences in the areas reporting high minority populations. **Table 3-3** summarizes residential acquisition and relocation impacts resulting from Alternative E and the ATC in relation to the distribution of minority populations within a one-mile radius of the proposed interchange.

Table 3-3
Comparative Acquisition and Relocation Impacts on Percent Minority Populations

Percent Minority Composition of 2010 Census Blocks [2]	Number of Impacts [1]	
	Alternative E	ATC
Less than 20%	0	0
20% to 40%	0	0
40% to 60%	0	0
60% to 80%	5	0
80% to 100%	10	9
Total	15	9

Notes:
1. Structure acquisition and relocation impacts determined under "worst case scenario" right-of-way acquisition conditions and are subject to change based on the final project design; does not include commercial displacement impacts.
2. Within a one-mile radius of the proposed US 90 and LA 318 interchange.

Another area of concern in determining potential environmental justice issues involves noise impacts. The results of the traffic noise analysis performed for this project are presented in

Section 3.15. In summary, noise impacts are expected to occur at 21 structures under Alternative E and 28 structures under the ATC, with the majority of impacted residences located in the northwest quadrant of the interchange, adjacent to US 90, and areas in the southwest quadrant near the proposed frontage road tie-in. As shown in **Figure 3-2**, the northwest quadrant has a minority composition ranging from less than 20% to 40% and on the southwest side up to 60%. A traffic noise abatement analysis determined that noise barriers did not result in a reasonable reduction in noise levels and/or were not economically feasible given the scattered nature of the residences surrounding the proposed interchange project, as in accordance with the LADOTD *Highway Traffic Noise Policy*.

As detailed in **Section 3.4**, control of access would be implemented at specific areas along both Alternative E and the ATC, thereby affecting access to adjacent parcels that abut existing roadways within the study area, which contains a high concentration of minority populations. In particular, the travel distance and travel time of residents living within the northwest interchange quadrant would slightly increase in order to access LA 318 and US 90 due to the relocation of the north frontage road. This extended travel distance (up to 2 miles) and travel time experienced by residents would be similar under the ATC and Alternative E.

An open forum Public Involvement Meeting to discuss the proposed modification under the ATC to the US 90 and LA 318 interchange was held on Thursday, August 27, 2015 at the West St. Mary Civic Center from 4:00 PM to 7:00 PM. The West St. Mary Civic Center is an Americans with Disabilities Act-compliant facility that is utilized by members of the local community for various recreational and meeting activities. A brief summary of outreach efforts associated with the Public Meeting and further details are provided in **Section 5.0**.

As detailed in the Final EA/FONSI from October 2013, throughout the project development process, outreach with the community and an awareness of the potential for adverse impacts on environmental justice communities has been carefully evaluated and numerous alternatives have been developed and modified that met the purpose and need while reducing the number of impacts. The ATC requires the fewest residential relocations compared to Alternative E.

Any potential adverse impacts on minority and low-income populations would be offset in part by project-related benefits. The proposed project would replace an at-grade signalized intersection with a grade-separated interchange that would enhance emergency evacuation and reduce the potential for turning conflicts, which may result in a reduction of crashes. Implementation of the ATC would improve access for trucks and tractor-trailers to LA 318, thereby improving overall driving conditions for all populations. Furthermore, the economic vitality of the surrounding communities would likely benefit from the improved access to and from the St. Mary Sugar Cooperative and the Port of West St. Mary resulting from the proposed interchange project.

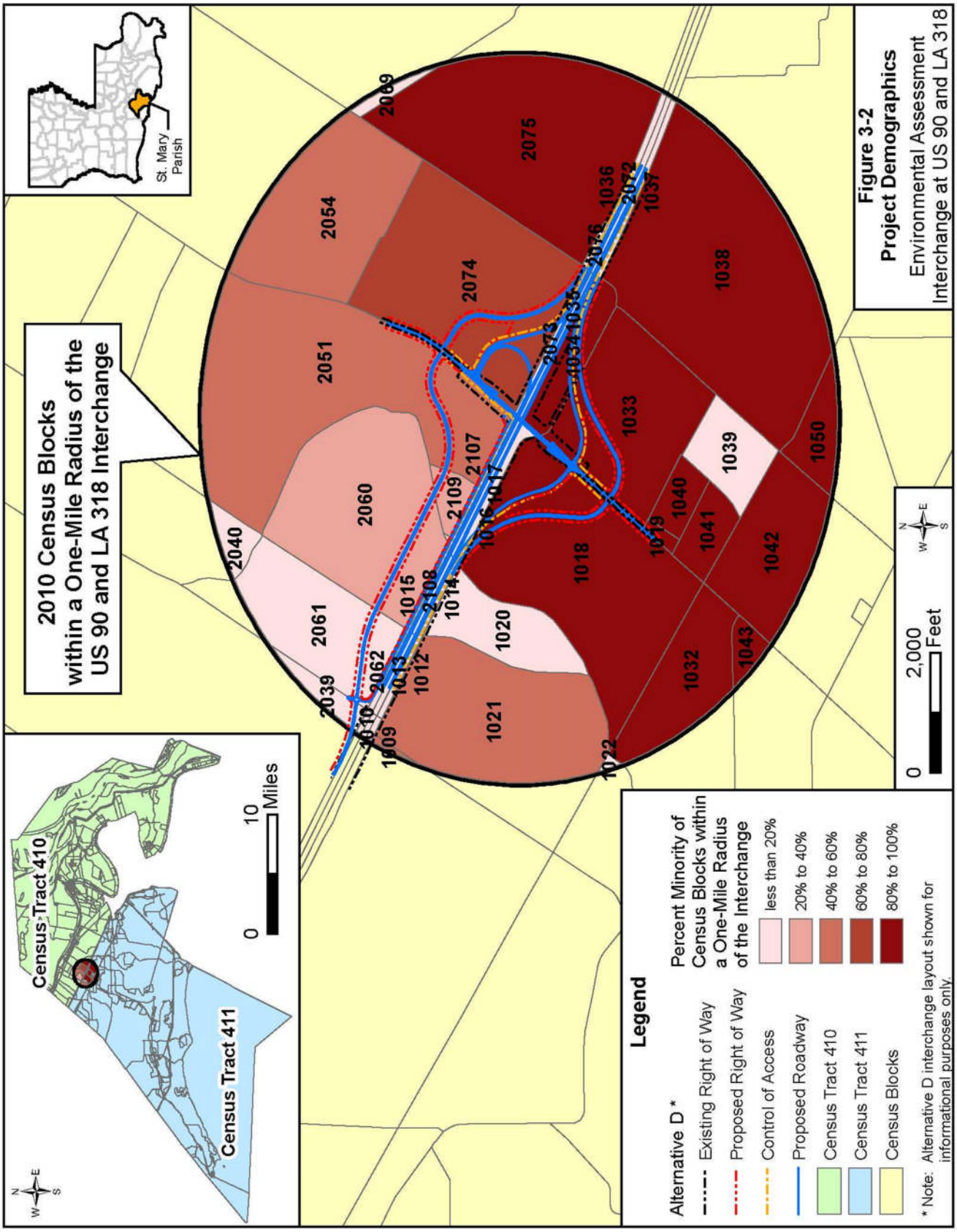
St. Mary Parish
2010 Census Blocks within a One-Mile Radius of the US 90 and LA 318 Interchange
Figure 3-2
Project Demographics
Environmental Assessment
Interchange at US 90 and LA 318
Census Tract 410
Census Tract 411
0
10
Miles
0
2,000
Feet
Legend
Alternative D *
Existing Right of Way
Proposed Right of Way
Control of Access
Proposed Roadway
Census Tract 410
Census Tract 411
Census Blocks
Percent Minority of Census Blocks within a One-Mile Radius of the Interchange
less than 20%
20% to 40%
40% to 60%
60% to 80%
80% to 100%
* Note: Alternative D interchange layout shown for informational purposes only.

The proposed improvements are necessary at the US 90 and LA 318 interchange for the eventual upgrade of US 90 to interstate standards. The area surrounding the proposed interchange is broadly composed of minority and low-income populations (75.1% minority). Given that the composition of other populations surrounding the US 90 and LA 318 interchange is limited, impacts resulting from the proposed improvements would not be greater or more severe on minority and/or low-income populations compared to other populations. Therefore, disproportionate impacts to minority and low-income populations are not anticipated.

3.3 Community Facilities

As noted in the affected environment and impacts sections of the Final EA/FONSI from October 2013, two community facilities are located within the study area: the West St. Mary Civic Center, located in the northeast interchange quadrant and the Bambi Head Start Center, located within the northwest interchange quadrant towards the western project terminus.

Alternative E does impact the West St. Mary Civic Center parcel, including the relocation of the entrance driveway from LA 318 to the proposed Frontage Road. Implementation of the ATC would not require any right-of-way acquisition from the West St. Mary Civic Center parcel.

Neither Alternative E nor the ATC would result in right-of-way acquisition from the Bambi Head Start Center. As detailed in **Section 3.15**, construction of Alternative E or the ATC would result in a noise impact at this facility. A noise barrier evaluation within the northwest interchange quadrant was completed, but determined that the construction of a noise barrier would be unreasonable in accordance with the LADOTD *Highway Traffic Noise Policy*.

3.4 Transportation and Traffic

Future Roadway Network Characteristics

Alternative E consists of a combination partial cloverleaf (one loop ramp) and diamond interchange with an overpass structure along US 90 with separate bridges for eastbound and westbound lanes over LA 318. The ATC consists of a diamond interchange with twin overpass structure on US 90 (eastbound and westbound) providing a grade separation over LA 318. The ramps on the northern side of US 90 would be constructed using an urban design, thus locating the ramps between the proposed westbound US 90 bridge and the existing north frontage road.

Upgrading US 90 to freeway standards with full control of access within the project limits would be achieved with both build alternatives. As US 90 and LA 318 would be grade-separated under each alternative, the existing signalized intersection at US 90 and LA 318 would be eliminated. An existing median crossover on US 90 located near the western project limits near Landry's Seafood House would be removed to provide full control of access.

As part of constructing a full control of access facility, construction of interchange ramps and the relocation of adjacent frontage roads would occur. The proposed entrance and exit ramps intersecting with LA 318 would result in two new unsignalized interchanges on both the north

and south sides of US 90. The relocated frontage roads that tie into LA 318 would also result in two additional unsignalized intersections on both sides of US 90.

Build Alternative Intersection Capacity Analyses

Intersection analyses were performed at each of the LA 318 ramps and frontage road unsignalized intersections. The intersection level of service results for Alternative E for future year 2015 and 2035 are presented in **Table 3-4.**

Table 3-4
Intersection Level of Service Results for Alternative E

Intersection	Control	2015		2035	
		Critical Movement	LOS AM/PM	Critical Movement	LOS AM/PM
LA 318 at South Frontage Rd	U	EB	B/A	EB/WB	B/B
LA 318 at North Frontage Rd	U	EB/WB	B/A	EB/WB	B/B
LA 318 at US 90 Eastbound Ramp	U	EB	B/A	EB	B/B
LA 318 at US 90 Westbound Ramp	U	WB	B/A	WB	B/B

Notes: U - Unsignalized Control
EB - Eastbound
WB - Westbound

The intersection level of service results for the ATC for future year 2015 and 2035 are presented in **Table 3-5.**

Table 3-5
Intersection Level of Service Results for the ATC

Intersection	Control	2015		2035	
		Critical Movement	LOS AM/PM	Critical Movement	LOS AM/PM
LA 318 at South Frontage Rd	U	EB	B/A	EB/WB	B/B
LA 318 at North Frontage Rd	U	EB/WB	B/A	EB/WB	B/B
LA 318 at US 90 Eastbound Ramp	U	EB	B/A	EB	B/B
LA 318 at US 90 Westbound Ramp	U	WB	B/A	WB	B/B

Notes: U - Unsignalized Control
EB - Eastbound
WB - Westbound

As shown in **Table 3-4** and **Table 3-5**, based on 2015 and 2035 projected volumes, all unsignalized intersections are projected to operate at a LOS B or better in 2015 and 2035, resulting in little to no traffic operational deficiencies.

Build Alternative Roadway Segment Capacity Analyses

The 2015 and 2035 roadway analyses for Alternative E and the ATC indicate a LOS A and LOS B, respectively, for the US 90 segments east and west of LA 318.

The 2015 and 2035 roadway analyses for Alternative E and the ATC indicate a LOS C for the LA 318 segment north of US 90 and LOS C for the LA 318 segment south of US 90.

Build Alternative Ramp Junction Analyses

Ramp junction analyses were conducted to evaluate the ramp junctions identified in Alternative E and the ATC for operational deficiencies and to define future facility requirements. Four ramp junctions identified in Alternative E and the ATC were evaluated with respect to year 2015 and design year 2035 build conditions. The analyses of merge and diverge ramp junctions were performed utilizing the *Highway Capacity Software Plus (HCS+), Version 5.5*. These analyses were performed for 2015 and 2035 build conditions. The results are presented below in **Table 3-6.** The analyses indicate that the ramps will operate at an acceptable LOS during the design year 2035 for Alternative E and the ATC.

Table 3-6
Ramp Junction Level of Service Results for Alternative E and the ATC

Ramp Junction	Type	2015 LOS AM/PM		2035 LOS AM/PM	
		Alternative E	ATC	Alternative E	ATC
US 90 Eastbound Off-Ramp	Diverge	A/A	A/A	A/A	B/B
US 90 Eastbound On-Ramp	Merge	A/A	A/A	A/A	B/B
US 90 Westbound Off-Ramp	Diverge	A/A	A/A	A/B	A/B
US 90 Westbound On-Ramp	Merge	A/A	A/A	A/B	B/B

Summary of Traffic Operations

For Alternative E or the ATC, constructing an interchange at this location would improve through movement traffic operations on US 90 and LA 318 because traffic delays associated with the signalized intersection of US 90 and LA 318 will be eliminated. The interchange will separate US 90 traffic from LA 318, thereby reducing the potential for turning movement conflicts. The reduction in turning movement conflicts at US 90 and LA 318 may result in a reduction in crashes. According to the *Highway Safety Manual (HSM)* (AASHTO, 2010), the potential crash effects of converting a three-leg or four-leg at-grade intersection into a grade-separated interchange results in a Crash Modification Factor (CMF) of 0.58 for all crashes in the area of the intersection (all severities). This means that a 42% reduction in all crashes for all severities could be expected and that the proposed interchange would operate more safely by reducing conflict movements when compared to an at-grade intersection.

Travel Patterns, Control of Access, and Associated Access Impacts

Regulating access is called access control or control of access. According to *A Policy on Geometric Design of Highways and Streets*, "Control of access refers to the regulation of public access rights to and from properties abutting the highway. With full control of access, preference is given to through traffic by providing access connections with selected public roads only and by prohibiting crossings at-grade and direct private driveway connections. Generally, full or partial access control is accomplished by legally obtaining the access rights from the abutting property owners (usually at the time of purchase of the right-of-way) or by the use of frontage roads" (AASHTO, 2004). Control of access is important because it defines where vehicular access can and cannot connect to a portion of an interchange roadway system, including cross streets and entrance and exit ramps.

Access to properties would be maintained through proposed frontage roads, proposed local access roads, or along portions of LA 318 where access control restrictions do not apply. Control of access applies to LA 318, but not to the same extent as it applies to US 90. Where access control is proposed, direct access to the abutting adjacent property would be prohibited. This would result in changes in travel patterns and driveway access, which would result in slight increased travel times primarily for local traffic.

As part of Alternative E or the ATC, US 90 would be converted to a full control of access facility within the project limits. On the western terminus of the project near Landry's Seafood House currently there is one driveway along the existing south frontage road that has direct access to US 90. A median crossover is located on US 90 at this location that also has an intersecting driveway that connects to the north frontage road at Gibby Street. In both Alternative E and the ATC, the median crossover and connection between US 90 and the north and south frontage road would be eliminated. Controlling access at this location would result in changes in travel patterns to access facilities located on the opposite side of the highway, which would result in increased travel times for local traffic.

In Alternative E, the location of the westbound exit ramp control of access limit in the northeast quadrant of the interchange parallels the loop ramp and continues north along the east side of LA 318. As previously shown in **Figure 2-1**, the control of access terminates north of the existing West St. Mary Civic Center driveway on LA 318. Subsequently, access to the existing driveway into the West St. Mary Civic Center parking lot would be restricted and a new driveway that connects to the frontage road would be required. This conflict with the existing driveway does not exist in under the ATC.

As part of both Alternative E and the ATC, the existing frontage road / proposed local access road located on the northwest quadrant of each interchange will serve only the residents that live on the street. This street would become a residential street with very low daily traffic volumes and signs would be installed indicating that the street is for "local access only". A dead-end is proposed on the eastern-most end of the street with the terminus ending beyond the driveway of the last house on the street. A cul-de-sac beyond the last driveway would provide adequate space for both cars and medium trucks, such as trash collection vehicles, to make a U-turn.

Travel time savings would be realized by motorists using US 90 due to a slightly increased travel speed (raised from 65 mph to 70 mph), the absence of cross street conflicting traffic, and the removal of the signalized intersection at LA 318 that currently affects traffic operations. Travel time for residents within the northwest interchange quadrant would increase due to the relocation of frontage roads and their connectivity to the existing roadway network. That is, for both Alternative E and the ATC, residents of the northwest interchange quadrant would have to travel west on the existing frontage road / proposed local access road to reach the north frontage road, and then backtrack east on the north frontage road to reach LA 318. Alternative E and the ATC would both result in a slight increase in travel distance (approximately 2 miles) and travel time (up to 3 or 4 minutes) for these residents; however, the travel distance and time would be greater for Alternative E than the ATC.

Travel time on loop ramps, such as the one proposed in the northeast quadrant for Alternative E, tends to be greater than on a diamond or diagonally configured ramp. Another disadvantage associated with loop ramps is related to operational conditions for large trucks and tractor-trailers. The radius of a loop ramp curve is established based on design speed. The posted speed limit is generally lower than the design speed, but in some cases they could be the same. Subsequently, if posted speed limits are exceeded, large truck could potentially flip over. This is a concern because the loop ramp is proposed on the north side of US 90 along LA 318 where heavy vehicles account for approximately 38% of the average daily traffic volume on LA 318.

With regard to ramp design features, the ATC differs from Alternative E in the westbound on-ramp configuration. The ATC proposes a traditional diamond interchange and a diagonal configuration for the westbound on-ramp, while Alternative E proposes a partial cloverleaf interchange and a loop configuration for the westbound on-ramp. Based on AASHTO's *Policy on Geometric Design of Highways and Streets*, the required acceleration length for vehicles entering an interstate from 25 MPH to 50 MPH (70% of mainline speed) is 550 feet. As previously noted in **Section 2.3**, LADOTD speed-lane change standard plans SC-01 and SC-02 shall govern the design of entrance and exit ramps. The LADOTD standard plan SC-01 requires a 700-foot acceleration lane with a 300-foot taper for all ramps, which meets or exceeds the AASHTO minimum requirement. This is an important design feature for Alternative E, as vehicles may be entering the US 90 westbound lanes from the loop ramp at a slower speed compared to vehicles entering from a diagonally configured entrance ramp under the ATC. For both Alternative E and the ATC, the proposed acceleration lane, while configured differently, would provide the same LADOTD specified distance for vehicles to accelerate and enter the US 90 westbound mainline safely.

The right-turn lane, in combination with the channelized turn lane onto the loop ramp, would provide approximately 300 feet of storage that could accommodate approximately 12 cars or up to four or six large trucks. The roadway design features proposed including the minimal grade on the bridge (3%), proposed vertical curve, and right turn deceleration lane would safely accommodate traffic through this intersection.

At this same location, the loop entrance ramp and diagonal exit ramp in Alternative E would be constructed parallel to each other, with opposing ramp traffic movements separated by a 14-foot

depressed median or 30 feet between the edges of the travel lanes. Channelized medians, pavement markings, and signage would be installed to address all movements through the intersection and to manage driver expectancy. Warning signs would be installed to avoid wrong way traffic on the westbound exit ramp. Special illuminated warning signage, using LED's or beacons, could be installed to provide greater visibility at night.

3.5 Utilities

There is no difference between Alternative E and the ATC with regard to potential impacts related to utilities and an impacts analysis for this resource can be found in the Final EA/FONSI from October 2013.

3.6 Visual Environment

There are similar visual environment impacts expected for the ATC as those discussed for Alternative E and an impacts analysis for this resource can be found in the Final EA/FONSI from October 2013. Both Alternative E and the ATC would require the construction of a new Frontage Road on the backside of the properties locate in the northwest quadrant; however, while the road would be new to the landscape, it would be at constructed at-grade and therefore visual impact would be minor. There are reduced impacts expected from the ATC due to the lack of the elevated loop entrance ramp and required embankments associated with Alternative E. The westbound entrance ramp for the ATC would be constructed at-grade and between the existing Frontage Road and US 90, two already dominate features in the visual landscape.

3.7 Cultural Resources

All of the previous findings including a complete analysis of the historic standing structure field reconnaissance and Phase 1 Cultural Resource Survey for Alternative E can be found in the Final EA/FONSI from October 2013 as well as the stand-alone reports entitled *Preliminary Historic Standing Structure Field Reconnaissance Survey* and *Phase I Cultural Resource Survey – US Highway 90/LA318 Interchange, St. Mary Parish, Louisiana* (Handly et al. 2013). These findings were reviewed and accepted by State Historic Preservation Office (SHPO) on August 10, 2015.

After the development and selection of the ATC, a complete analysis of the cultural resources, including a stand-alone draft report entitled *Addendum No. 1 – Additional Phase I Cultural Resource Survey – US Highway 90/LA318 Interchange, St. Mary Parish, Louisiana (Report 22-4341)* (Handly et al. 2015) was completed and submitted to the SHPO for review and concurrence. The field efforts concentrated on those areas of the ATC that were outside of the previous area surveyed and findings reviewed and accepted by the SHPO on August 10, 2015 for Alternative E.

During field investigations, no archaeological sites, cemeteries, or standing structures were identified in the additional areas surveyed for the ATC. Coordination with SHPO is ongoing.

AECOM recommends that no additional cultural resources investigations be required within the remaining surveyed portions of the proposed grade-separated interchange at the intersection of US 90 and LA 318, given that no other cultural resources were identified in these areas.

3.8 Section 4(f) and 6(f)

There are no resources protected by Section 4(f) or Section 6(f) that would be used by Alternative E or the ATC within the study area. Therefore, consideration under Section 4(f) and Section 6(f) is not required. All previous analysis for this resource can be found in the Final EA/FONSI from October 2013.

3.9 Water Resources

No differences between Alternative E and the ATC with regard to potential impacts related to water resources are expected; an impacts analysis for this resource can be found in the Final EA/FONSI from October 2013. Both Alternative E and the ATC cross two small unnamed tributaries on the northwest side and will have minor modifications to the flow and configuration. An erosion and sediment control plan would be developed and implemented that includes all specifications and Best Management Practices (BMPs) necessary to control erosion and sedimentation from construction activities. Examples of BMPs used to mitigate construction effects on water quality and drainage include, but are not limited to, the use of stacked hay bales, silt fences, mulching, reseeding, and use of buffer zones. Regarding impacts to surface water quality, direct effects of the construction activities would have the greatest effect to turbidity and nutrient loads. However, BMPs that would be employed would greatly mitigate these effects, and effects would be temporary.

3.10 Floodplains

A floodplain evaluation was conducted in accordance with Executive Order (EO) 11988 and 23 CFR 650. This evaluation showed that both Alternative E and the ATC would cross portions of the 100-year floodplain. **Table 3-7** compares the acreage that would be impacted by each alternative. All of the impacts to the 100-year floodplain occur in the southwest quadrant of the study area. Both Alternative E and the ATC cross the floodplain near the unnamed tributary near the location where the proposed frontage road for each alternative would reconnect to the existing frontage road.

Table 3-7
Potential Impacts to 100-year Floodplain

	No-Build Alternative	Alternative E	Alternative ATC
Floodplain (acres)	0	0.76	0.61

Source: FEMA 2006 Flood Insurance Rate Map

The ATC reduces impacts to the floodplain by 0.15 acres when compared to Alternative E and would also reduce the amount of floodplain converted to impermeable surfaces. All of the impacts analysis related to floodplains can be found in the Final EA/FONSI from October 2013.

3.11 Geology and Mineral Resources

There is no difference between Alternative E and the ATC with regard to potential impacts related to geology and mineral resources, and an impacts analysis for these resources can be found in the Final EA/FONSI from October 2013. While both Alternative E and the ATC involve bridge and roadway construction that would require foundation work and embankment of the soil, these activities would have only minor impacts to surface soils and would not alter the overall geology of the study area. Three abandoned oil/gas wells were identified but are not impacted by either Alternative E or the ATC.

3.12 Prime Farmland and Other Soils

Direct effects to prime farmland soils are measured in terms of acreage of soils classified as prime farmland that would be converted for construction of roadway surfaces. As noted in the affected environment section of the Final EA/FONSI from October 2013, prime farmland soils are widespread throughout the study area and all soils within the footprints of both Alternative E and the ATC are classified as prime farmland soils. Therefore, acreage of prime farmland that would be converted to transportation right-of-way is equivalent to the amount of new right-of-way required by either Alternative E or the ATC, minus the area of the pond in the southwest quadrant. **Table 3-8** summarizes the impacts to each soil type by acre.

Table 3-8
Potential Impacts to Prime Farmland Soil Types

Alternative	Soil Type & Acres Impacted					
	Baldwin silty clay loam (BdA)	Coteau silt (CoA)	Galvez silt loam (GaA)	Iberia clay (IbA)	Patoutville silt (PaA)	Total
E	4.63	29.07	2.73	41.71	3.57	81.71
ATC	5.03	27.13	2.37	24.38	3.77	62.68

Source: NRCS Web Soil Survey, 2011.

The ATC impacts fewer acres of prime farmland soils than Alternative E. All of the impacts analysis related to prime farmland soils can be found in the Final EA/FONSI from October 2013.

3.13 Hazardous Material Sites

There is no difference between Alternative E and the ATC with regard to potential impacts related to hazardous materials sites, and an impacts analysis for this resource can be found in the Final EA/FONSI from October 2013. The one regulated facility in the project area is not adjacent to any areas of proposed roadway construction or excavation, nor would land be

acquired from the property; this site is considered to be a de minimis risk in terms of potential environmental effects or impacts during construction activities due to compliance with the Louisiana Department of Environmental Quality (LDEQ). Therefore, no adverse effects are anticipated with construction of either Alternative E or the ATC.

3.14 Air Quality

There is no difference between Alternative E and the ATC with regard to potential impacts related to air quality, and an impacts analysis for this resource can be found in the Final EA/FONSI from October 2013. St. Mary Parish is currently in attainment for all six National Ambient Air Quality Standards (NAAQS) principal air pollutants (USEPA, 2011).

3.15 Noise

As part of the proposed improvements to the US 90 / LA 318 interchange in St. Mary Parish, Louisiana, a noise modeling assessment was conducted using the current FHWA-approved traffic noise model (TNM 2.5) and LADOTD's *Highway Traffic Noise Policy* (July, 2011). Specific work included a traffic noise assessment at sensitive receptors along the ATC alignment. For impacted receptors, a noise mitigation assessment was conducted to evaluate the feasibility and reasonableness of noise barriers. This is the same process that was performed for Alternative E, which is detailed in the Final EA/FONSI from October 2013.

Table 3-9 presents a summary of the adverse noise impacts that were predicted by the future year TNM 2.5 models. Some of the structures in the study area are predicted to have future traffic noise levels that approach or exceed the applicable Noise Abatement Criteria (NAC).

Table 3-9
Summary of Traffic Noise Impacts Year 2035

Alternative	Sensitive Receptors Impacted ≥ 66 dBA	Sensitive Receptors ≥ 10 dBA Over Existing Noise Levels
Alternative E	21	0
ATC	28	0

A mitigation analysis was conducted based on the LADOTD *Highway Traffic Noise Policy*. One of the three criteria for reasonableness outlined in the policy states that the "cost estimate of the noise abatement measure should be equal to or less than $35,000 per benefitted receptor." The LADOTD *Highway Traffic Noise Policy* defines a benefited receptor as "a recipient of an abatement measure, whether impacted or not, receiving 5 dBA or more reduction in the noise level as a result of the proposed abatement."

To determine the cost per benefited receptor, preliminary cost estimates were calculated based on LADOTD 2011 noise barrier wall costs per square foot for the structures located immediately adjacent to US 90. Three barrier locations warranted under the ATC were evaluated to determine if the cost per benefited receiver met the costs criteria. **Table 3-10** presents the cost

estimates for three noise barriers along portions of the frontage roads and the costs per benefited receiver.

Table 3-10
Estimated Barrier Costs Per Benefitted Receiver for the ATC

Estimated Length (ft)	Average Height (ft)	Area (sq ft)	Estimated Material and Labor Cost	Predicted Benefited Receivers	Cost per Predicted Benefited Receiver
2,600	12	31,201	$1,154,437	14	$82,460
1,340	20	26,813	$2,225,479	5	$445,096
1,000	17.2	17,199	$1,616,706	5	$323,341

Based on the total number benefitted receivers, the cost per benefited receiver would be well above the $35,000 threshold for all three noise barrier locations under the ATC. Consequently, there are no noise barriers, or any other abatement measures, that would be both feasible and reasonable for reducing the predicted adverse noise impacts of project construction under the ATC under the LADOTD policy. As described in the Final EA/FONSI from October 2013, no noise barriers, or any other abatement measures, were determined to be both feasible and reasonable under Alternative E.

3.16 Upland, Wetland and Aquatic Communities

An evaluation was conducted to determine the various habitat types located in the study area, as well as their composition and extent, and is in the stand-alone *Wetland Findings Report, Proposed US Highway 90 / LA 318 Interchange, St. Mary Parish, Louisiana* (T. Baker Smith, 2011). An impacts analysis on upland, aquatic, or wetland communities can be found in the Final EA/FONSI from October 2013. This evaluation showed that the ATC would impact less upland and wetland habitats than Alternative E. **Figure 3-3** shows where the ATC crosses the upland or forested areas, the potential wetlands, and the aquatic habitat which consists of the pond located in the southwest interchange quadrant. **Table 3-11** compares the acreages of each habitat type that would be impacted by Alternative E and the ATC.

Table 3-11
Potential Impacts to Upland, Wetland, and Aquatic Communities

Habitat Type	Alternative E	Alternative ATC
Upland Habitat (acres)	2.02	1.22
Wetland Habitat (acres)	0.39	0.09
Aquatic Habitat (acres)	1.47	1.51

Source: Aerial Imagery 2011

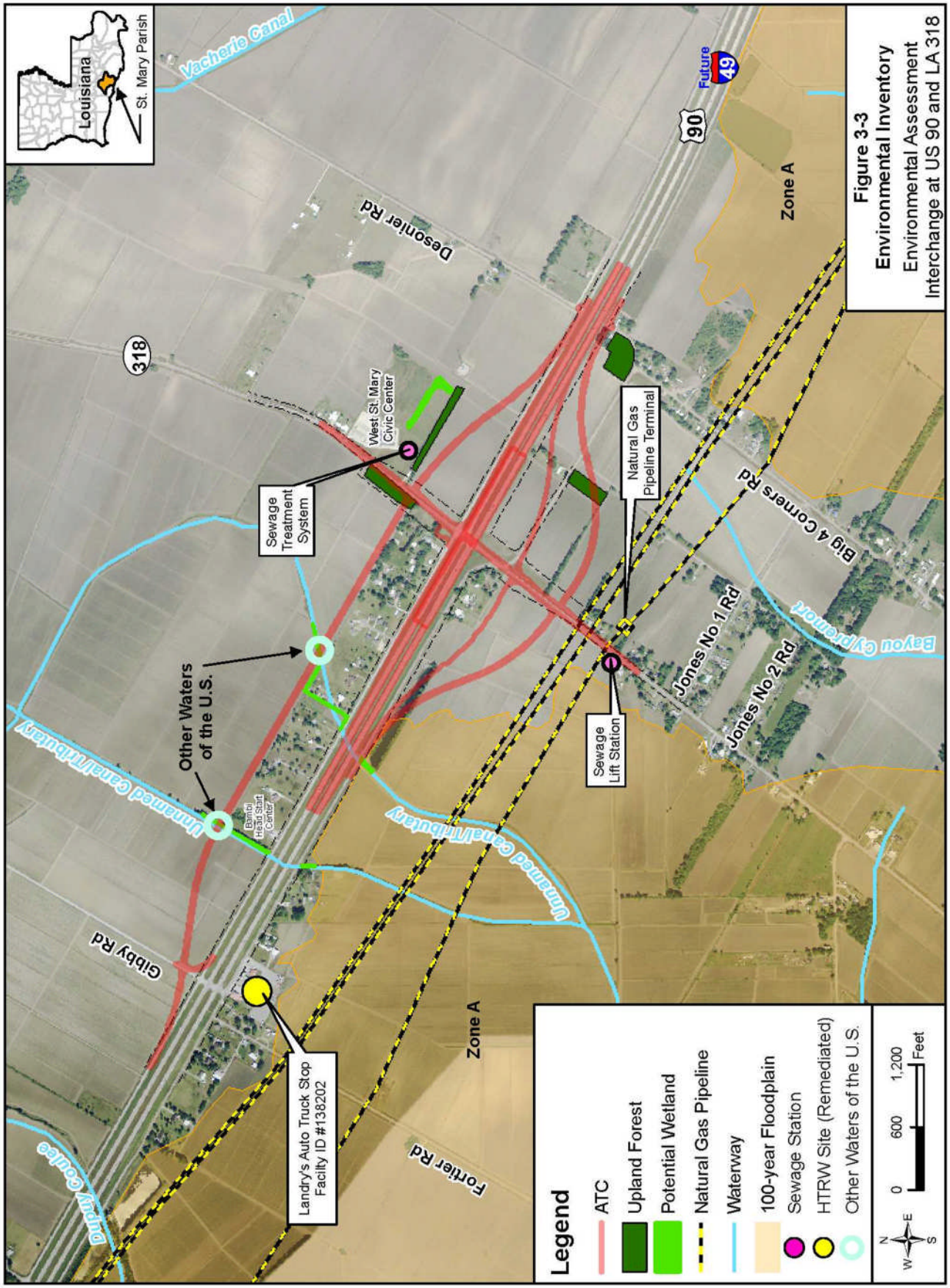
Louisiana
St. Mary Parish
Vacherie Canal
Desonier Rd
318
West St. Mary Civic Center
Sewage Treatment System
Other Waters of the U.S.
Unnamed Canal/Tributary
Bambi Head Start Center
Gibby Rd
Landry's Auto Truck Stop Facilty ID #138202
Dupuy Coulee
Fortier Rd
Zone A
Natural Gas Pipeline Terminal
Sewage Lift Station
Jones No 1 Rd
Jones No 2 Rd
Big 4 Corners Rd
Bayou Cypremort
90
Future
49
Figure 3-3
Environmental Inventory
Environmental Assessment
Interchange at US 90 and LA 318
Legend
ATC
Upland Forest
Potential Wetland
Natural Gas Pipeline
Waterway
100-year Floodplain
Sewage Station
HTRW Site (Remediated)
Other Waters of the U.S.
0
600
1,200
Feet
N
E
S
W

The majority of the study area consists of agricultural farmland, roadways, and residential development. Other than the small pockets of emergent wetland areas (shown in **Figure 3-3**), none of the natural communities within the project area are communities of special concern. The pond located in the southwest quadrant is approximately two acres in size and would be filled in prior to the construction of the exit ramps to allow for at-grade construction. The pond is not considered a jurisdictional water body or wetland and provides no critical habitat to any protected species.

The emergent wetlands were classified as jurisdictional, and thus are under the authority and protection of the US Army Corps of Engineers (USACE). The ATC substantially reduces the amount of wetlands that will need to be mitigated through the Section 404 Permit under the Clean Water Act which is being obtained for the project.

3.17 Plants and Wildlife Protected by Law

There is no difference between Alternative E and ATC with regard to potential impacts related to plants and wildlife protected by law, and an impacts analysis for this resource can be referenced in the Final EA/FONSI from October 2013. Correspondence during the Solicitation of Views (SOV) period with both the USFWS and the Louisiana Natural Heritage Program (LNHP) confirm that no impacts to rare, threatened, or endangered species or critical habitats are likely to occur with either Alternative E or the ATC.

3.18 Coastal Zone Management

There is no difference between Alternative E and the ATC with regard to potential impacts related to the coastal zone, and an impacts analysis for this resource can be found in the Final EA/FONSI from October 2013. The entire study area is located within the coastal zone, therefore a Coastal Use Permit (CUP) application would need to be completed and submitted to the Coastal Management Division (CMD) prior to construction.

3.19 Construction Effects and Best Management Practices

Alternative E and the ATC are very similar with regard to construction effects and best management practices and a detailed analysis of the construction effects and best management practices can be found in the Final EA/FONSI from October 2013. The main difference between Alternative E and the ATC is the construction duration. During the design/build bid process, it was determined that the ATC would require approximately 300 less construction days than Alternative E. This would translate into a substantial reduction in construction-related effects and impacts to the community.

3.20 Secondary and Cumulative Effects

Secondary and cumulative effects would be the same under the ATC as described for Alternative E and can be found in the Final EA/FONSI from October 2013.

This Page Intentionally Left Blank

CHAPTER 4.0

4.0 SUMMARY AND RECOMMENDATIONS

4.1 Summary of Environmental Impacts

Table 4-1
Summary of Project Features and Impacts

Evaluation Criteria	Unit	Build Alternative [1]	
		E	ATC
Interchange Alignment and Right-of-Way Considerations			
Interchange Type - Rural	n/a – not applicable	Combination Partial Cloverleaf and Diamond	Diamond
Ramp Configuration	n/a	One Loop Ramp and 3 Diamond / Diagonal Ramps Constructed in 3 Quadrants	Diamond / Diagonal Ramps Constructed in 4 Quadrants
Bridge Configuration	n/a	US 90 over LA 318	US 90 over LA 318
Required Right-of-Way	acres	83.2	64.2
Constructability / Maintenance of Traffic (MOT) During Construction			
MOT on LA 318	n/a	Construct a detour road or phase traffic and widen roadway	Construct a detour road or phase traffic and widen roadway
MOT on US 90	n/a	Construct ramps and / or frontage roads first for traffic diversion	Construct ramps and / or frontage roads first for traffic diversion
Human Environment Considerations & Estimated Impacts			
Residential Structure Impacts [2]	number	11	8[3]
Mobile Home Structure Impacts [2]	number	4	1[3]
Commercial Structure Impacts [2]	number	0	0
Caribbean Winds Parcels Impacted [2]	number	0	0
Right-of-Way Acquisition from the West St. Mary Civic Center Parcel	acres	3.4	0
Maintain Existing Access at Civic Center	Yes/No	No [4]	Yes
NRHP Eligible Standing Structures [5]	number	0	0
NRHP Eligible Archaeological Sites [6]	number	0 [6]	0
Disproportionate Environmental Justice Impacts	Yes/No	No	No
Access and Travel Time Impacts in Northwest Interchange Quadrant	Yes/No	Yes	Yes
Noise Impacts	Yes/No	Yes	Yes
Feasible & Reasonable Noise Abatement	Yes/No	No	No
Air Quality Impacts	Yes/No	No	No
Physical Environment Considerations & Estimated Impacts			
Water Wells Impacted	number	1	0

Table 4-1
Summary of Project Features and Impacts

Evaluation Criteria	Unit	Build Alternative [1]	
		E	ATC
Underlain by Chicot Aquifer	Yes/No	Yes	Yes
Natural Gas Pipeline Crossings	number	6	6
Natural Gas Pipeline Terminal Impact	Yes/No	No	No
Maintain Existing Access at Natural Gas Pipeline Terminal	Yes/No	Yes	Yes
Sewer Treatment System at West St. Mary Civic Center	Yes/No	No	No
Sewer Lift Station on the West Side of LA 318 South of US 90	Yes/No	No	No
Prime Farmland Impacted	acres	81.71	62.68
Natural Environment Considerations & Estimated Impacts			
Upland Habitat Directly Impacted	acres	2.02	1.22
Wetlands Directly Impacted	acres	0.39	0.09
Aquatic Habitat Directly Impacted	acres	1.47	1.51
100-Year Floodplains Impacted	acres	0.76	0.61
Other Waters of the US Impacted[7]	number	2	2
Scenic Streams	number	0	0
Significant Trees	number	2	2
Estimated Cost Considerations [8]			
Right-of-Way Cost – Land Only	$20,000/acre	$1,664,000	$1,284,000
Residential Structure Acquisition	$150,000 ea.	$1,650,000	$1,200,000
Mobile Home Structure Acquisition	$25,000 ea.	$100,000	$25,000
Commercial Structure Acquisition	$150,000 ea.	0	0
Residential Relocation Assistance	$50,000 ea.	$550,000	$400,000
Mobile Home Relocation Assistance	$50,000 ea.	$200,000	$50,000
Estimated Construction Cost (rounded)	$ Millions	$64.9 M	$55.7 M
Total Estimated Cost (rounded)	$ Millions	$69.1 M	$58.7 M

Notes:
1. Estimated impacts are based on the interchange layouts as shown in the Appendix A Project Design Plans and are subject to change.
2. Structure and relocation impacts consider worst case scenario – a structure may not be directly impacted however the parcel may be rendered unusable or would require acquisition due to control of access.
3. The number of residential/mobile home structure impacts under the ATC could increase due to proximity of road improvement impacts.
4. The existing Civic Center driveway on LA 318 would be relocated to the Northeast Frontage Road. The existing Natural Gas Pipeline Terminal driveway on LA 318 would be relocated to the Southeast Frontage Road.
5. A potential historic structure is located in the northwest quadrant of the interchange but will not be directly impacted by any of the build alternatives. An effects determination relative to NRHP eligibility is forthcoming from SHPO.
6. A Phase I Cultural Resource Inventory has been completed for Alternative E and SHPO determined that no historic archaeological properties or historic standing structures would be impacted in a letter received August 5, 2013.
7. Other Waters of the US includes unnamed canals and tributaries.
8. Costs are based on recent Design/Build Bid Results and detailed in Section 2.5 'Preliminary Implementation Cost Estimates'.

Human Environment Considerations

Both Alternative E and the ATC would require the purchase of new right-of-way, but Alternative E (83.2 acres of right-of-way) would require approximately 19 more acres than the ATC (64.2 acres of right-of-way). Although neither Alternative E nor the ATC would directly impact the West St. Mary Civic Center building, right-of-way acquisition would impact approximately 3.4 acres under Alternative E to the West St. Mary Civic Center parcel while the ATC would have no impacts. Access to the West St. Mary Civic Center would be maintained under the ATC, but would need to be relocated to the frontage road under Alternative E.

Alternative E would impact a greater number of structures (11 residences and 4 mobile homes) compared to the ATC (8 residences and 1 mobile home). It was assumed that all residence and mobile home acquisitions would require relocation assistance. The ATC eliminates all residential impacts on the east side of US 90.

Access to non-relocated properties would be maintained through proposed frontage roads, proposed local access roads, or along portions of LA 318 where control of access restrictions do not apply. Control of access applies to LA 318, but not to the same extent as on US 90. Control of access allows for high-speed travel by regulating all ingress/egress traffic flow. Control of access allows for unhindered traffic flow by eliminating traffic signals, access to adjacent property and elimination of at-grade crossings with all entrances and exits to the highway provided at interchanges. Locations where control of access applies to LA 318 occur between entrance and exit ramp intersections extending to frontage road intersections. Where control of access is required, however, direct access to adjacent parcels would be prohibited. This is primarily an issue for residents in the northwest interchange quadrant under both Alternative E and the ATC, where the relocation of the proposed north frontage road would affect residents' travel patterns to LA 318 and US 90. That is, residents would have to travel west on the existing frontage road / proposed access road and then backtrack on the relocated north frontage road to LA 318, thereby increasing their current travel times by 3 to 5 minutes which is considered relatively minor.

The proposed improvements are necessary at the US 90 and LA 318 interchange for the eventual upgrade of US 90 to interstate standards. The area surrounding the proposed interchange is broadly composed of minority and low-income populations (75.1% minority). Given that the composition of other populations surrounding the US 90 and LA 318 interchange is limited, impacts resulting from the proposed improvements would not be greater or more severe on minority and/or low-income populations compared to other populations. Therefore, disproportionate impacts to minority and low-income populations are not anticipated.

The project is located in an area that is in attainment for all NAAQS, and would not have an effect on air quality. Noise impacts are anticipated under both Alternative E and the ATC. Noise abatement analysis determined that noise barriers under both Alternative E and the ATC were neither feasible and/or reasonable.

Physical Environment Considerations

Similarly to Alternative E, the ATC would not impact the sewage treatment system at the St. Mary Civic Center and should avoid the sewer lift station located on the west side of LA 318 south of US 90. The Natural Gas Pipeline Terminal located in the southeast interchange quadrant would not be impacted by either Alternative E or the ATC, which both require only minor utility relocations.

Prime farmland soils are widespread throughout the study area such that the acreage of prime farmland impacted by Alternative E or the ATC is equivalent to their acres of required right-of-way minus the small pond in the southwest quadrant. As such, the ATC would impact 62.68 acres and Alternative E would impact 81.71 acres of prime farmland.

Alternative E would directly impact one water well and the ATC would not directly impact any water wells. The proposed project is underlain by the Chicot aquifer and is not located near the major recharge zones. All necessary USEPA and LDEQ safeguards would be implemented to avoid impacts.

Natural Environment Considerations

In terms of effects on the natural environment, both Alternative E and the ATC are very similar. There are several small unnamed tributaries that will be crossed by both Alternative E and the ATC, but these crossings are north of US 90 and outside the 100-year floodplain. South of US 90, the impacts to the 100-year floodplain associated with Alternative E and the ATC occur in the floodway fringe and would not increase the base-flood elevation to a level that would violate applicable floodplain regulations. While only minor impacts to the floodplain are anticipated, any drainage ditches or culverts affected by the proposed project, as well as new roadway within the 100-year floodplain, would be designed to maintain pre-construction hydrologic conditions and would not result in any substantive effect to base flood elevations of the surrounding area. Impacts to wetlands under the ATC are the least of any build alternative at only 0.09 acres while Alternative E impacts 0.39 acres of wetlands. Overall, the impacts to the natural environment are all reduced under the ATC as compared to Alternative E.

Estimate of Probable Cost

During the design/build process, the teams put forth bids to construct both Alternative E and the ATC. As is shown in **Table 4-1**, the ATC is around $10 million dollars less expensive to construct and also was estimated to take over 300 fewer days to complete. This estimate is based on bid results submitted by the design/build teams. Both the cost savings and the reduced construction duration were added benefits to choosing the ATC as a preferred alternative.

Summary of Benefits

Both the ATC and Alternative E meet the purpose and need and would provide long-term benefits. The ATC and Alternative E would replace the at-grade signalized intersection with a

grade-separated interchange that would enhance emergency evacuation and reduce the potential for turning movement conflicts, which may result in a reduction of crashes. Travel time savings can be realized on US 90 and LA 318 with the ATC or Alternative E, resulting in reduced vehicular operating costs for both passenger and commercial vehicle operations. Furthermore, the economic vitality of the surrounding communities would likely benefit from the improved access via LA 318 to and from the St. Mary Sugar Cooperative and the Port of West St. Mary resulting from the proposed project. The ATC would likely result in a greater reduction to vehicular operating costs and improved economic vitality compared to Alternative E due to the ATC's interchange alignment (diamond) and ramp configuration (no loop ramp). The ATC and Alternative E would also be more beneficial for truck and tractor-trailer movement due to the bridge configuration (US 90 over LA 318). In terms of community cohesion and potential disruption, the ATC would only impact 9 residential structures, the lowest of any evaluated build alternative.

4.2 Summary of Permits and Certifications

The following permits and/or certifications are required for the proposed project upon selection of either Alternative E or the ATC:

- Authorization under the Louisiana Pollutant Discharge Elimination System (LPDES) from LDEQ for Storm Water Discharge for Construction Activities over 5 acres.
- A drainage hydraulic study will be required during design, and a development permit will be required prior to commencement of construction.
- Prior to the start of project construction, a Request for a Jurisdictional Determination by the USACE and a Section 404 Permit for temporary and permanent impacts from construction of the proposed project for wetlands determined to be jurisdictional is needed. A permit application was filed and permit obtained as part of the 2013 FONSI. A permit modification was requested for the ATC. Commitments to minimize harm to wetlands and streams are as follows:

    1. Dredged or fill materials used for construction will be non-polluting material in accordance with Environmental Protection Agency (EPA) Guidelines for the Discharge of Dredged or Fill material found in 40 CFR 230.
    2. All construction activity will be performed in a manner that would minimize increased turbidity of the water in the work area and otherwise avoid adverse effects on water quality and aquatic life.
    3. All dredged material not used as backfill will be placed on land, and no runoff water from the disposal site will be allowed to enter the waterway.
    4. Erosion during and after construction will be controlled as outlined in the latest edition of the LADOTD's *Standard Specifications for Highway Construction*.
    5. The project will not significantly disrupt the movement of those species of aquatic life indigenous to the water body.

6. Temporary work ramps or haul roads, when needed, will provide sufficient waterway openings to allow the passage of expected high flows.
7. The contractor will take precautions in the handling and storage of hazardous materials, including lubricants and fuels, to prevent discharges or spills that would result in degradation of water quality.
8. Wetland areas will be avoided to the maximum extent practicable.
9. Wetlands outside of the construction limits will not be used for construction support activities (borrow sites, waste sites, storage, parking access, etc.) under permit by the USACE.
10. Heavy equipment working in wetlands will be placed on mats.
11. Clearing of wetlands will be limited to the minimum amount necessary for the completion of the job.
12. The contractor will be responsible for the protection of adjacent wetlands.

- Prior to construction, a CUP application would need to be completed and submitted to the Coastal Management Division of the Louisiana Department of Natural Resources (LDNR). Submitting an application for a CUP does not imply that one will be required; rather the application is simply one part of the rules and procedures necessary for construction projects within the coastal zone. A prior joint permit application was filed with LDNR and obtained as part of the 2013 FONSI. A modification has been requested for the ATC.

- Approval by the St. Mary Parish floodplain manager for any modifications to the floodplain.

4.3 Summary of Commitments and Mitigation Measures

The following commitments and mitigation measures are required for the proposed project upon selection of either Alternative E or the ATC:

- Best Management Practices: Implementation of BMPs during construction to mitigate non-point source pollution and comply with EPA Guidance on impacts to a Sole Source Aquifer.

- Maintenance of Traffic: A construction sequencing plan will be prepared prior to construction to minimize disruption of traffic on US 90 and LA 318. Under both the ATC and Alternative E, two lanes of traffic on US 90 in both the eastbound and westbound directions should be maintained during construction of the overpass bridges. As part of the ATC, the construction of the ramps and/or frontage roads would be completed first and then used for diversion of traffic. The bridge structures for the US 90 overpass would then be constructed. Similar to portions of the ATC, the construction of the ramps and/or frontage roads for Alternative E would be completed first and then used for diversion of traffic. The bridge structures for the US 90 overpass and elevated westbound on-ramp would then be constructed. During the sugarcane harvest season, October through December, LA 318 should remain open to traffic at all times. The

appropriate sequencing of construction operations and maintenance of traffic would ensure that LA 318 remains accessible. These provisions are necessary in order to avoid construction signed detours that would potentially increase travel time and vehicle operating costs.

- Permanent Signage: Channelized medians, pavement markings, and signage would be installed to address all movements through the intersection and to manage driver expectancy. Warning signs would be installed to avoid wrong way traffic on the westbound exit ramp for Alternative E. Special illuminated warning signage, using LED's or beacons, could be installed to provide greater visibility at night. Based on the traditional diamond interchange layout, the ATC would not require specialized permanent signage for any of the ramps associated with it.

- Noise: The mitigation measures that are implemented at the construction site must be determined to be necessary and would be the responsibility of the construction contractor. LADOTD may require that one or more of these measures are included as provisions to the contract documents. All mitigation measures must adhere to the latest version of the *Louisiana Standard Specifications for Roads and Bridges* and comply with state and local laws. The following potential mitigation measures would be implemented during construction to minimize adverse noise impacts if deemed necessary:

  - Locate site equipment as far from noise sensitive receptors as possible;
  - Avoid nighttime activities in residential areas where sensitivity to noise increases during the nighttime hours, but nighttime construction work can be considered in commercial areas if deemed necessary to meet project schedules and expedite construction;
  - Avoid impact pile driving where possible in noise sensitive areas by using drilled piles and sonic or quieter vibratory pile drivers where geological conditions permit; and
  - Use specially muffled equipment, such as enclosed air compressors, and mufflers on all engines.

- Air Quality: During the construction of the proposed facility, air quality impacts will be minimized by the project contractor through a combination of fugitive dust control, equipment maintenance, and compliance with state and local regulations.

- Hazardous Materials: During construction, any site that is found to contain hazardous materials will be remediated and all work conducted in conformance with LDEQ, EPA, and Occupational Safety and Health Administration (OSHA) regulations and policy.

- Right-of-Way Acquisitions and Land Use: Relocations have been minimized to the maximum extent practicable. All relocation activities would be governed by the *Federal Uniform Relocation Assistance and Real Property Acquisition Policies Act 0f 1970*. Construction of the project will not begin until decent, safe, and sanitary replacement housing is in place and offered to all affected persons. Home owners will be eligible for

replacement housing and moving expense payments. Owners may also be eligible for an additional payment to provide comparable housing and to assist with the increased costs of a new mortgage and incidental expenses incurred. Displaced persons, businesses, farms, and nonprofit organizations are eligible for reimbursement for actual reasonable moving costs, as well.

- Utility Relocations: During the design phase of the project, the design/build contractor will coordinate the proposed roadway improvements with impacted utility companies.

- Archaeological Findings: A Phase I cultural resource survey and inventory was conducted in August 2015 for the LADOTD at a proposed grade-separated interchange at the intersection of US 90 and LA 318, in St. Mary Parish, Louisiana. The results of the survey were submitted to the SHPO for review and concurrence. AECOM recommends that no additional cultural resources investigations be required within the remaining surveyed portions of the proposed grade-separated interchange at the intersection of US 90 and LA 318, given that no other cultural resources were identified in these areas. Coordination with SHPO is ongoing.

- Plants and Wildlife Protected by Law: The threatened Louisiana black bear may occur in the general project area. In its solicitation of views response letter, the US Fish and Wildlife Service (USFWS) recommends the following measures to minimize impacts to the Louisiana black bear and its critical habitat:

  - If construction is to be performed during the denning season (December through April) or if bald cypress or tupelo gum tress with 36 diameter at breast height or greater will be removed or destroyed, further consultation with the USFWS will be necessary; and
  - Construction workers are strongly urged to avoid bears if work is to be performed during the non-denning season (April through December). Workers should not leave food or garbage in the field and bear proof garbage containers are recommended.

- Protection of Trees: Protection of Trees: In accordance with EDSM No. I.1.1.21, care should be taken to avoid damage to four significant trees located in the northwest, southwest and southeast quadrants of the interchange. The two significant trees located in the southwest quadrant are located between the future exit ramp and US 90 overpass under both the ATC and Alternative E. The two trees are located far enough from the proposed travel lanes so that they could be left in place. Two significant trees would be impacted by the project, one tree located in the southeast quadrant would be directly impacted by the eastbound entrance ramp and the second tree is in the northwest quadrant, near the proposed cul-de-sac for the existing service road.

  - During construction, the significant trees in the southeast quadrant (located at 29.864360, -91.631258) and in the northwest quadrant (29.867415, -91.633273) would be removed. The trees shall be marked and approved by the project engineer before removal by the contractor. The Design-Build contractor shall notify LADOTD

Environmental Section 4 weeks prior to the removal of the tree to allow for public notification.

- In order to protect the significant trees in the southwest quadrant (located at 29.866805, -91.635185 and 29.866687, -91.635149), the Design-Build contractor shall install tree protection fencing (as per special detail LD-02, which shall be part of the plans) around the two live oak trees to avoid damage during construction of the proposed interchange and demolition of the existing service road. In the southeast quadrant, an additional, smaller live oak tree located at 29.864828, -91.630931 shall also be treated as described above. The protected trees shall be identified in the plan and profile sheets.
- In the event that the trees would require pruning, a licensed arborist (with qualifications as described in NS-201-00004) shall be contracted.
- During construction, two additional trees would be removed to allow for pavement widening on LA 318. These trees are smaller live oak trees that do not qualify for the LADOTD designation as significant trees. One tree is located north of US 90 at 29.867868, -91.632617, and the second is located south of US 90 at 29.864529, -91.635223.

This Page Intentionally Left Blank

CHAPTER 5.0

5.0 AGENCY, PUBLIC, AND TRIBAL COORDINATION AND INVOLVEMENT

A detailed description of the agency, public, and tribal involvement that was previously conducted for the project can be found in the Final EA/FONSI from October 2013. This section describes the public outreach and coordination that has occurred as part of the supplemental EA prepared for the design/build process to construct the interchange at US 90 and LA 318.

5.1 Solicitation of Views

As part of the supplemental EA process, early coordination was initiated with a Solicitation of Views (SOV) packet that was mailed July 29, 2015 to applicable Federal, state and local agencies, organizations, individuals, Native American Tribal contacts, and elected officials in the project area. The packet included a letter and project location map with the alternative layout. The SOV letter requested identification of possible adverse economic, social, or environmental effects or concerns. Copies of the SOV packet and SOV responses are included in **Appendix E**. **Table 5-1** summarizes agency responses to the SOV packet.

Table 5-1
Summary of Solicitation of Views Responses

ID No.	Date	Responder	Comment Summary	How SOV Comment Was Addressed
1	8/7/2015	**Bradley E. Spicer**, Assistant Commissioner, LA Department of Agriculture and Forestry	No Comment	No Action Required
2	8/10/2015	**Kevin D. Norton**, State Conservationist, Natural Resource Conservation Service	The proposed construction areas will potentially impact prime farmland soils, a completed CPA-106 Form is completed and impacts to NRCS work in the vicinity is not expected.	See Section 3.12 and Appendix C
3	8/14/2015	**Amity Bass**, Coordinator, Natural Heritage Program, LA Department of Wildlife and Fisheries	No impacts to rare, threatened, or endangered species or critical habitat are anticipated for the proposed project. No state or federal parks, wildlife refuges, scenic streams, or wildlife management areas are known at the specified site.	See Sections 3.8, 3.9, 3.17,
4	8/17/2015	**James H. Welsh**, Commissioner of Conservation, LA Department of Natural Resources, Office of Conservation	Review of records indicate: no active oil, gas, or injection wells; one plugged well (Serial No. 144942); two registered water wells in the vicinity that the project should not impact; care must be taken to locate any other wells installed before registration was required.	See Sections 3.11 and 4.3

Table 5-1
Summary of Solicitation of Views Responses

ID No.	Date	Responder	Comment Summary	How SOV Comment Was Addressed
5	8/19/2015	**Omar T. Martinez**, Coordinator Sole Source Aquifer Program, US Environmental Protection Agency	The project is located on the Chicot aquifer system, but should not have an adverse effect on the quality of the ground water underlying the project site.	See Section 3.9 and 4.3
6	8/31/2015	**Lindsey D. Bilyeu**, NHPA Senior Section 106 Reviewer, Choctaw Nation of Oklahoma	The project area lies outside of the Choctaw Nation's area of historic interest. The Choctaw Nation Historic Preservation Department respectfully defers to the other Tribes.	No Action Required
7	8/31/2015	**Jennifer D. Rachal**, Floodplain Management Program Coordinator, LA Department of Transportation	The project needs to provide for adequate flow and to assure compliance coordinate with local floodplain coordinator.	See Section 3.10
8	9/4/2015	**Phil Boggan**, Deputy State Historic Preservation Officer, LA Department of Culture, Recreation, and Tourism	No known historic properties will be affected by this undertaking. This effect determination could change should new information come to our attention.	See Section 3.7
9	9/9/2015	**Karen L. Clement,** SOV Manager, New Orleans District, US Army Corps of Engineers	Do not anticipate any adverse impacts to any USACE projects. Information including maps, aerial imagery and local soil surveys are indicative that waters of US, including wetlands is present; a permit will be required for any activities therein.	See Sections 3.9, 3.16 and 4.2

Source: LADOTD, 2015

5.2 Public Involvement

Public Meeting

Public involvement is intended to create opportunities for the public to have input in identifying transportation problems and solutions and to participate in the project planning process. An open forum Public Involvement Meeting to discuss the proposed change (ATC) to the approved interchange design (Alternative E) was held on Thursday, August 27, 2015. The meeting was held at the West St. Mary Civic Center in Jeanerette, Louisiana from 4:00 p.m. to 7:00 p.m.

The primary purpose of the August 27, 2015 Public Meeting was to present the ATC to the public and explain the changes to the impacts that were approved with the FONSI in October 2013 for Alternative E. It also allowed for an opportunity for the public to provide comments on the project and to identify an alternative preference. This was accomplished through the use of a survey that was part of the Public Meeting comment form.

A complete synopsis of the Public Meeting is compiled in the *US 90 and LA 318 Interchange Improvements Public Meeting Record, August 27, 2015* (AECOM, 2015). The methods of notification used to inform the public about the Public Meeting included placing commercial advertisements in two local newspapers and sending letters to property owners, businesses, elected officials, and agency representatives. The commercial display advertisements placed in the *Daily Iberian* appeared in the circulations dated August 9, 2015 and August 20, 2015. The commercial display advertisements placed in the *Franklin Banner Tribune* appeared in the circulations dated August 13, 2015 and August 20, 2015.

Public representation of 46 attendees at the meeting is considered to be generally strong given the localized nature of the project. The comment response is also considered to be typical with 14 attendees providing their comments on the night of the Public Meeting and an additional 48 commenters responding over the ten-day comment period.

While the majority of the community response to the project was generally positive, several concerns where identified on the comment forms. Transportation and access issues, commercial vehicle operations, noise impacts, and construction impacts were the most common concerns listed on the comment form.

Of the two build alternatives presented, the ATC was preferred by approximately 32 percent of the commenters that expressed preference for one alternative. Less property acquisition, fewer relocations, and reduced cost were some of the reasons noted for the choice of the ATC. Approximately 63 percent preferred Alternative E because of concerns related to drainage, increased noise, encroachment of the proposed right-of-way, and a desire to be relocated. Approximately five percent of commenters did not express a preference for either build alternative. A summary table of public comments received during the comment period is located in **Appendix D** and summarized below in **Table 5-2**.

Table 5-2
Summary of August 2015 Public Meeting Comments and Resolution

Comment / Issue / Concern	How Comment was Addressed
Alternative Preference	
32% of commenters stated a preference for the ATC	This alternative was fully evaluated in the Supplemental EA and the impacts are summarized in **Section 4.1**.
63% of commenters stated a preference for Alternative E	This alternative was fully evaluated in the Supplemental EA and the impacts are summarized in **Section 4.1**.
Benefits Associated with Alternative Preference	
Improves driving conditions / access of sugar cane trucks and tractors	Commenters generally agreed that US 90 over LA 318 was a key feature which is present under Alternative E and the ATC. Several noted a preference for the ATC as it eliminated the loop entrance ramp.
Safety	Commenters agreed that the elimination of the signalized intersection will greatly improve safety with either Alternative E or the ATC.
Property owner effects	Several commenters chose the ATC as it requires less right-of-way.

Table 5-2
Summary of August 2015 Public Meeting Comments and Resolution

Comment / Issue / Concern	How Comment was Addressed
Overall Project Impacts	
Relocation impacts	The ATC with a modified diamond interchange layout reduces the number of residential relocations by five over Alternative E and several commenters noted that reduced relocations including their own home was the main reason for the selection of the ATC. However, several commenters selected Alternative E for the very reason that it did require the relocation of their home as they felt under the ATC there property value would decline due to increased noise and ROW encroachment. Relocations have been evaluated and are contained in **Section 3.1**.
Construction impacts	Construction impacts are short-term in comparison to the potential long-term benefits of the project. Construction duration for the ATC is estimated to be 300 days less as contained in **Section 4.1**. Maintenance of traffic during construction, especially during harvest season, is described in **Section 3.19**.
Access impacts	Change in access is unavoidable to the motoring public when converting an existing highway from limited access to full control of access. Local travel patterns would be slightly altered. A diamond interchange with diagonal ramps is more favorable to traffic operating conditions compared to loop ramps, where lower driving speed is necessary. Large trucks and tractor - trailers hauling sugar cane could experience operational issues. Access impacts have been evaluated in **Section 3.4**.
Noise impacts	Noise impacts and noise abatement measures have been evaluated and are contained in **Section 3.15**.
Drainage impacts	The project would be evaluated and designed to provide adequate drainage improvements to handle any increased runoff from the roadway and prevent ponding or flooding of adjacent properties. Drainage impacts have been evaluated in **Section 3.10** and **Section 4.2**.

The ATC achieved all of the positive benefits of Alternative E with five less residential relocations, less wetland impacts, and reduced overall impacts include required right-of-way. The selection of the new preferred alternative takes into consideration the environmental effects of each alternative, cost, public opinion, and a number of other factors that are summarized in **Chapter 4**. After distribution of the Supplemental EA and during the subsequent 30-day comment period the public again had an opportunity for input. Once all of the comments from these two periods have been received, responded to, and incorporated into the decision process, an alternative is selected as the alignment to build and the FHWA will issue a FONSI.

Continued Public Involvement

While the public comment period as part of the Public Meeting concluded on September 9, 2015, the public will have another 30-day comment period to submit comments on the project. The Draft Supplemental EA will be distributed and available to the public for review after it is

approved by FHWA and LADOTD. All comments during this period will be recorded and addressed in the Final Supplemental EA and incorporated into the decision making process for approval of the FONSI.

5.3 Agency and Stakeholder Coordination

Elected Officials and Regulatory Agency Coordination

State and local public officials, as well as regulatory agencies, were notified of the August 27, 2015 Public Meeting by mail. These officials and agency representatives were invited to attend the public meeting to offer comments regarding the proposed project. Several elected officials, including the State Senator and Representative for the area, two local government officials, and several community leaders attended the meeting.

Stakeholder Coordination

Coordination with study area key stakeholders was undertaken during the Supplemental EA process. A stakeholder meeting was held at the St. Mary Civic Center on August 18, 2015. Representatives from the St. Mary Sugar Co-operative, Port of West St. Mary, and the Southern Mutual Help Association / Caribbean Winds subdivision were invited as well as key landowners and community representatives such as pastors.

Approximately 14 people attended the stakeholder meeting with general discussion and comments focusing on changes to required right-of-way and relocations, how the new ramp configuration would operate, and when construction could begin. The local fire chief, Mr. Clarence Clark, was the only person to submit a formal comment with regard to the potential increase in response time for the homes in the northwest quadrant as a result of the new frontage road and closure of direct access from LA 318. Mr. Clark was concerned about a downgrade in insurance ratings for the homes in the northwest quadrant. The Property Insurance Association of Louisiana noted that the increased distance and response time could have an impact on the rating but this would not be known until the area was reassessed at some point in the future. It was also noted that any impact from the increased distance or response time could be mitigated with more training, more volunteers, or other possible items.

5.4 Supplemental EA Distribution

The distribution list of recipients of the Supplemental EA is included in **Table 5-3**. The distribution list includes Federal, state, and local agencies, elected officials, community organizations, key stakeholders, and libraries. Recipients of the Executive Summary were also provided an electronic version portable disk format (pdf) of the Final EA on CD.

Table 5-3
Supplemental EA Distribution List

#	Recipient	Address	Contact	Copies of EA and CDs	Copies of Executive Summary and CDs
	Lead Agencies				
1	LA Department of Transportation and Development	1201 Capitol Access Road Room 502 P Baton Rouge, LA 70802 P.O. Box 94245 Baton Rouge, LA 70804-9245	Ms. Noel Ardoin, P.E. Attn: Maria Reed	15 and 2 CDs	
2	LA Department of Transportation and Development	428 Hugh Wallis Road Lafayette, LA 70502-3648	Mr. Bill Oliver	5 1 CD	
3	Federal Highway Administration	5304 Flanders Drive, Suite A Baton Rouge, LA 70808-4348	Ms. Lismary Gavillan	1 and 1 CD	
	Federal Agencies				
4	US Army Corps of Engineers, New Orleans District Regulatory Branch	USACE NOD 7400 Leake Ave. New Orleans, LA 70118 P. O. Box 60267 (70160-0267)	Ms. Karen Oberlis		1
5	US Coast Guard, 8th District	Hale Boggs Federal Building 500 Poydras New Orleans, LA 70130	District Commander		1
6	US Department of Agriculture, Natural Resources Conservation Service	3737 Government Street Alexandria, LA 72302	Mr. Kevin Norton		1
7	US Department of Commerce, Economic Development Administration	504 Lavaca Street, Suite 1100 Austin, TX 78701-2858	Mr. Pedro Garza, Regional Director		1
8	US Department of the Interior, Office of Environmental Policy and Compliance	1849 C Street, NW MS 2462 Washington, DC 20240	Mr. Willie Taylor, Director Ms. Mary Blanchard, Deputy Director		1 and 5 CDs
9	US Department of Commerce, National Oceanic and Atmospheric Administration-Southeast Regional Office	263 13th Avenue, South St. Petersburg, FL 33701	Mr. Miles Croom		1
10	US Environmental Protection Agency, Region 6	Fountain Place 12th Floor, Suite 1200 1445 Ross Avenue - 6ENXP Dallas, TX 75202-2733	Mr. Michael Bechdol		1 and 3 CDs
11	US Fish and Wildlife Service, Lafayette Ecological Service Field Office	646 Cajundome Blvd. Suite 400 Lafayette, LA 70506	Mr. Jeff Weller		1
12	US Geological Survey, LA	3535 S. Sherwood Forest Blvd. Suite 120 Baton Rouge, LA 70816	Mr. Charles Demas		1

Table 5-3
Supplemental EA Distribution List

#	Recipient	Address	Contact	Copies of EA and CDs	Copies of Executive Summary and CDs
13	US Federal Emergency Management Agency, Region 6	800 North Loop 288 Denton, TX 76209-3698	Ms. Mayra G. Diaz, Natural Hazards Program Specialist		1
	Louisiana State Agencies				
14	LA Department of Agriculture and Forestry, Office of Soil and Water Conservation	P. O. Box 3554 Baton Rouge, LA 70821-3554 5825 Florida Boulevard Baton Rouge, LA 70806	Mr. Bradley Spicer		1
15	LA Department of Agriculture and Forestry, Office of Forestry	9418 Highway 165 Oberlin, LA 70555-3521	Mr. Keith Aymond		1
16	LA Department of Natural Resources, Office of Mineral Resources	P.O. Box 2827 Baton Rouge, LA 70821-2827 617 North 3rd Street Baton Rouge, LA 70802	Mr. Jody Montelaro		1
17	LA Department of Transportation and Development, Floodplain Management Program	P. O. Box 94275 Baton Rouge, LA 70804-9245 8900 Jimmy Wedell Baton Rouge, LA 70807	Ms. Pamela L. Miller, CFM		1
18	LA Department of Public Safety, Highway Safety Commission	P. O. Box 66336 Baton Rouge, LA 70896 7919 Independence Blvd., Ste 2100 Baton Rouge, LA 70806	Mr. John LeBlanc		1
19	LA Department of Wildlife and Fisheries	P.O. Box 98000 Baton Rouge, LA 70898-9000 2000 Quail Drive Baton Rouge, LA 70808	Mr. Jay DePrato Mr. Russell Watson		1
20	LA Department of Wildlife & Fisheries, Louisiana Natural Heritage Program	P.O. Box 98000 Baton Rouge, LA 70898-9000 2000 Quail Drive Baton Rouge, LA 70808	Ms. Amity Bass		1
21	LA Department of Culture, Recreation and Tourism, Section 106 Review	P.O. Box 44247, Capitol Annex Baton Rouge, LA 70804 Division of Archeology 1051 North 3rd Street Baton Rouge, LA 70802	Mr. Mike Varnado, Ms. Rachel Watson		2
22	LA Department of Environmental Quality	P.O. Box 4303 Baton Rouge, LA 70821-4303 602 North 5th Street Baton Rouge, LA 70802	Ms. Beth Dixon		1
23	LA Department of Natural Resources, Office of Conservation	P.O. Box 94275 Baton Rouge, LA 70804-9275 617 North 3rd Street, 9th Floor Baton Rouge, LA 70802	Mr. James H. Welsh, Commissioner of Conservation		1

Table 5-3
Supplemental EA Distribution List

#	Recipient	Address	Contact	Copies of EA and CDs	Copies of Executive Summary and CDs
24	LA Department of Natural Resources, Coastal Management Division	P.O. Box 44487 Baton Rouge, LA 70804-4487 617 North 3rd Street Baton Rouge, LA 70802	Ms. Christine Charrier, Mr. Karl Morgan		1
25	LA Department of Health and Hospitals, Office of Public Health	628 N. 4th Street Baton Rouge, LA 70802	Mr. Jake Causey		1
26	LA Forestry Association	2316 S. McArthur Drive Alexandria, LA 71301-3037	Mr. Buck Vandersteen		1
27	LA Department of Children and Family Services	627 North 4th Street Baton Rouge, LA 70802	Ms. Martina Stribling, Deputy Undersecretary		1
28	LA Department of Economic Development, Office of Business Development	1051 N. 3rd Street Baton Rouge, LA 70802-5239	Mr. Don Hutchinson		1
29	LA Good Roads Association	P. O. Box 3713 Baton Rouge, LA 70821	Mr. Kenneth Perret		1
30	LA Office of Management and Finance	P.O. Box 3776 Baton Rouge, LA 70821	Ms. Ruth Johnson		1
31	LA State Attorney General, Environmental Out Reach Division	1885 N. 3rd Street Baton Rouge, LA 70802	Mr. James Caldwell		1
32	LA State Land Office, Division of Administration	P.O. Box 44124 Baton Rouge, LA 70804	Mr. Charles St. Romain		1
33	LA State Planning Office	Capitol Annex Building 2nd Flr. Baton Rouge, LA 70804	Mr. Barry Dusser, Director		1
34	LA State Police Troup C	627 North 4th Street Baton Rouge, LA 70802	Captain Darin Naquin		1
35	LA Office of Indian Affairs	150 N. Third Baton Rouge, LA 70802	Mr. Mark Ford	1	
36	Inter-Tribal Council of LA, Inc.	8281 Goodwood Boulevard, Suite I-2 Baton Rouge, LA 70808	Mr. Kevin Billiot	1	
37	Chitimacha Tribe of LA	105 Houma Drive Charenton, LA 70523	Ms. Kimberly S. Walden		1
38	Jena Band of Choctaw Indians	P.O. Box 14 Jena, LA 71342	Alina Shively, Deputy THPO		1
39	Coushatta Tribe of Louisiana	P.O. Box 818 Elton, LA 70532	Dr. Linda Langley, THPO		1
40	MS Band of Choctaw Indians	101 Industrial Road Philadelphia, MS 39350	Mr. Kenneth Carleton, THPO		1
41	Tunica-Biloxi Tribe of Louisiana	P.O. Box 1589 Marksville, LA 71351	Earl J. Barbry, Jr., THPO		1

Table 5-3
Supplemental EA Distribution List

#	Recipient	Address	Contact	Copies of EA and CDs	Copies of Executive Summary and CDs
	Federal and State Elected Officials				
42	US House of Representatives	800 Lafayette Street Suite 1400 Lafayette, LA 70501	Honorable Charles Boustany Jr.		1
43	US Senate	101 La Rue France Suite 505 Lafayette, LA 70508	Senator Bill Cassidy		1
44	US Senate	2201 Kaliste Saloom Rd. Suite 201 Lafayette, LA 70508	Senator David Vitter		1
45	LA House of Representatives	St. Mary Parish Courthouse, Room 304 Franklin, LA 70538	Honorable Sam Jones		1
46	LA House of Representatives	P.O. 1809 Gray, LA 70359-1809	Honorable Joe Harrison		1
47	LA State Senate	600 Main Street Suite 1 Franklin, LA 70538	Senator R. L. Allain II		1
	Local Officials, Agencies, and Non-Governmental Organizations				
48	St. Mary Parish Police Jury	500 Main St. Courthouse 5th Floor Franklin, LA 70538	Paul Naquin, Jr., President	1	11
49	St. Mary Parish Planning Department	500 Main St. Courthouse 5th Floor Franklin, LA 70538	Ms. Tammy Luke, Floodplain Administrator	1	1
50	City of Franklin	1526 Sterling Road Franklin, LA 70538-3860	Mayor Raymond Harris	1	
51	Town of Baldwin	800 Main Street Baldwin, LA 70514-213	Mayor Donna Lanceslin	1	
52	City of Jeanerette	1010 Main Street Jeanerette, LA 70544	Mayor Aprill Foulcard	1	
53	St. Mary Parish School Board	474 Hwy. 317 Centerville, LA 70522	Mr. Leonard J. Armato, Supt.		1
54	St. Mary Parish Sheriff	500 Main St. Courthouse 4th Floor Franklin, LA 70538	Mr. Mark Hebert		1
55	St. Mary Parish Soil & Water Conservation District	500 Main St. Courthouse Room 310 Franklin, LA 70538	Mr. Patra Ghergich		1
56	St. Mary Parish Civil Defense	P.O. Box 247 Patterson, LA 70392-0247	Mr. Duval Arthur		1
57	St. Mary Parish Chamber of Commerce	7332 Hwy 182 East Morgan City, LA 70381	Ms. Donna F. Meyer, Pres.		1
58	St. Mary Parish Farm Bureau Federation	1500 Hospital Avenue Franklin, LA 70538	Mr. Mark Chauvin		1
59	LA Economic Development	P.O. Box 395 Patterson, LA 70392	Ms. Anne M. Perry		1

Table 5-3
Supplemental EA Distribution List

#	Recipient	Address	Contact	Copies of EA and CDs	Copies of Executive Summary and CDs
60	South LA Economic Council	P.O. Box 2048-NSU Thibodaux, LA 70310	Mr. Vic Lafont		1
61	Cajun Coast Visitors & Convention Bureau	P.O. Box 2332 Morgan City, LA 70381	Ms. Carrie Stansbury		1
62	West St. Mary Civic Center	P. O. Box 579 Franklin, LA 70538	Ms. Virginia Sutton	1	
63	Sierra Club / Delta Club	P.O. Box 19469 New Orleans, LA 70179-0469	Darryl Malek-Wiley Regional Representative		1
64	I-49 International Coalition	P.O. Box 404 Gretna, LA 70054	Mayor Ronnie Harris		1
	Libraries				
65	LA State Library	Recorder of State Documents 701 North 4th Street Baton Rouge, LA 70802 Electronic pdf to: docs@state.lib.la.us	Ms. Karen Cook	20 1 CD	
66	St. Mary Parish Library	206 Iberia Street Franklin, LA 70538-4906	Document Librarian	2	
	Stakeholders				
67	Port of West St. Mary	15301 Highway 182 W Franklin, LA 70538	Mr. David Allain		1
68	St. Mary Sugar Co-op	20056 Hwy 182 West Jeanerette, LA 70544-8532	Mr. Dave Thibodeaux		1
69	Couhig Partners, LLC (rep. for Southern Mutual Help Association / Caribbean Winds)	643 Magazine Street, Suite 300 New Orleans, LA 70130	Mr. Rob Couhig Ms. Lisa Maher	1	
70	Lockett Center Four Corners	Linda's One Stop 1534 Cypremort Road Jeanerette, LA 70544	Mrs. Linda Lockett	1	
71	Mathews Program Research & Development, LLC	2208 Highway 318 Jeanerette, LA 70544	Mr. Craig Mathews		1
Total Copies				**53** [1]	**69** [2]

Notes:
1. 53 copies of EA plus 5 CD's containing the EA
2. 69 copies of the Executive Summary plus 8 CD's containing the EA

CHAPTER 6.0

6.0 REFERENCES CITED

A detailed listing of the references cited can be found in the Final EA/FONSI from October 2013. All references cited in this report, for the additional work performed as part of this Supplemental EA or re-cited for informational purposes, are listed below.

AECOM

2013. *Preliminary Historic Standing Structure Field Reconnaissance Survey* and *Phase I Cultural Resource Survey – US Highway 90/LA318 Interchange, St. Mary Parish, Louisiana*.

2013. *Interchange for US 90 and LA 318, Environmental Assessment, Finding of No Significant Impact*; Prepared for the Louisiana Department of Transportation and United States Department of Transportation.

2015. *Addendum No. 1 – Additional Phase I Cultural Resource Survey – US Highway 90/LA318 Interchange, St. Mary Parish, Louisiana (Report 22-4341)*

2015. *Conceptual Stage Relocation Plan, US 90 and LA 318 Interchange, St. Mary Parish, Louisiana.*

American Association of State Highway and Transportation Officials

2004. *A Policy on Geometric Design of Highways and Streets, 5th Edition.*

2010. *Highway Safety Manual, 1st Edition.*

C.H. Fenstermaker &Associates, Inc.

2007. *US 90 and LA 318 Overpass Stage 0 Feasibility Study*, Prepared for the Louisiana Department of Transportation and United States Department of Transportation.

Louisiana Department of Transportation and Development (LADOTD)

2011. *Highway Traffic Noise Policy.*

T. Baker Smith, LLC.

2011. *Wetland Findings Report, Proposed US Highway 90 / LA 318 Interchange, St. Mary Parish, Louisiana*.

US Environmental Protection Agency

2011. Green Book. http://www.epa.gov/oar/oaqps/greenbk/. Washington, D.C. http://www.epa.gov.

Environmental Statutes and Regulations and Guidance Documents

Executive Order 11988. *Floodplain Management*; 1977.

Executive Order 12898. *Federal Actions to Address Environmental Justice in Minority Populations and Low-Income Populations*; US President proclamation; 1994.

FHWA Order 6640.23A. FHWA Actions to Address Environmental Justice in Minority Populations and Low-Income Populations. June 14, 2012.

US Code. Uniform Relocation Assistance and Real Property Acquisition Policies Act; 42 USC 4601 et seq, 1970.

US DOT Order 5610.2(a). Actions to Address Environmental Justice in Minority Populations and Low-Income Populations. March 2, 2012.

CHAPTER 7.0

7.0 ACRONYM LIST

A detailed listing of the acronyms used can be referenced in the Final EA/FONSI from October 2013. All acronyms used in this report for the additional work performed as part of this Supplemental EA are listed below.

ATC	Alternative Technical Concept
BMP	Best Management Practice
CFR	Code of Federal Regulations
CMD	Coastal Management Division
CMF	Crash Modification Factor
CSD	Context Sensitive Design
CSS	Context Sensitive Solutions
CUP	Coastal Use Permit
EA	Environmental Assessment
EO	Executive Order
FHWA	Federal Highway Administration
FONSI	Finding of No Significant Impact
LADOTD	Louisiana Department of Transportation and Development
LDEQ	Louisiana Department of Environmental Quality
LDNR	Louisiana Department of Natural Resources
LNHP	Louisiana Natural Heritage Program
LPDES	Louisiana Pollutant Discharge Elimination System
n/a	Not Applicable
NAAQS	National Ambient Air Quality Standards
NAC	Noise Abatement Criteria
NEPA	National Environmental Policy Act
OSHA	Occupational Safety and Health Administration
SHPO	State Historic Preservation Office
SOV	Solicitation of Views
USACE	US Army Corps of Engineers

USEPA	US Environmental Protection Agency
USFWS	US Fish and Wildlife Service

APPENDIX A

INDEX TO SHEETS

SHEET NO.	DESCRIPTION
B-1	TITLE SHEET & LAYOUT MAP
B-2 - B-9	TYPICAL SECTIONS & DETAILS SHEETS
B10 - B15	PLAN & PROFILE SHEETS (US 90)
B16 - B20	PLAN & PROFILE SHEETS (US 90 WB RAMPS)
B21 - B24	PLAN & PROFILE SHEETS (US 90 EB RAMPS)
B25 - B28	PLAN & PROFILE SHEETS (LA 318)
B29	PLAN & PROFILE SHEET (LOCAL ACCESS ROAD)
B30 - B44	PLAN & PROFILE SHEETS (FRONTAGE ROADS)
B45 - B48	OVERALL LAYOUT AND GEOMETRY
A-1 - A-6	PRELIMINARY SEQUENCE OF CONSTRUCTION SHEETS
RW-1 - RW-26	RIGHT-OF-WAY PARCELS
101 - 113	BRIDGE PLANS

STATE OF LOUISIANA
DEPARTMENT OF TRANSPORTATION AND DEVELOPMENT
PLANS OF PROPOSED STATE HIGHWAY

F.A.P. NO. H004932
STATE PROJECT NO. H.004932

US 90 (FUTURE I-49) LA 318 INTERCHANGE
DESIGN-BUILD PROJECT
ST. MARY PARISH

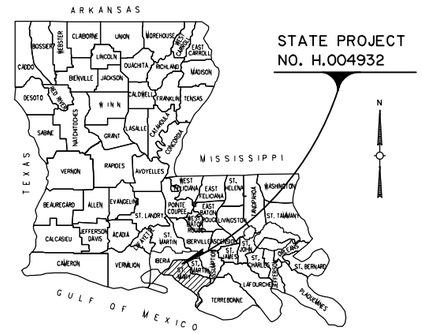

VICINITY MAP

C.S. LOG MILE 1.730
STA. 105+50.10
BEGIN S.P. NO H.004932
BEGIN F.A.P. NO. H004932

EQUATION: −40594.56
STA. 13+37.99 L.B. =
STA. 419+32.55 L.A.

C.S. LOG MILE 2.239
STA. 132+40.00
BEG. CONSTR. US 90

S.P. NO. H.004932
BRIDGE SITE: 1887.00'
STA. 157+00.00 TO
STA. 175+87.00 (WB) &
STA. 156+90.00 TO
STA. 175+77.00 (EB)

C.S. LOG MILE 2.399
STA. 310+48.48
BEGIN CONSTR. LA 318

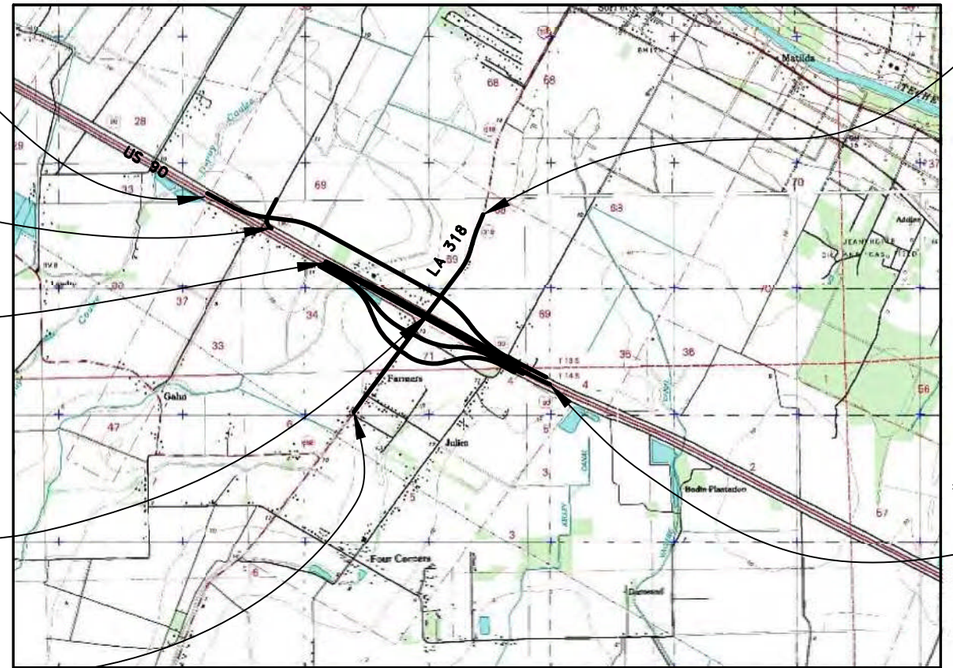

LAYOUT MAP

SCALE: 1 INCH = 2000 FEET
2000 0 2000 4000 6000

DATUM USED: NAD (1983), NAVD 1988
TRANSIT BOOKS: N/A
LEVEL BOOKS: 201-423

C.S. LOG MILE 3.185
STA. 352+00.00
END CONSTR. LA 318

C.S. LOG MILE 3.552
STA. 201+75.00
END CONSTR. US 90
END S.P. NO. H.004932
END F.A.P. NO. H004932

LOCATION OF WORK

CONTROL SECTION	LOGMILE	
	BEGIN	END
424-05	1.730	3.552
239-31	2.399	3.185

PREPARED AND RECOMMENDED FOR APPROVAL

STANTEC CONSULTING SERVICES INC. — DATE

APPROVED

LA DOTD CHIEF ENGINEER — DATE

APPROVED

FEDERAL HIGHWAY ADMINISTRATION — DATE

DEFINITIVE DESIGN

PRELIMINARY	*Louisiana Department of Transportation and Development*
NOT TO BE USED FOR CONSTRUCTION, BIDDING, RECORDATION, CONVEYANCE, SALES OR AS THE BASIS FOR THE ISSUANCE OF A PERMIT.	*ENGINEER: JOSEPH CAINS III* *LICENSE #: 33670* *DATE: JULY 2015*

US 90 TRAFFIC DATA:
2015 A.D.T.= 22940
2035 A.D.T.= 34090
D = 52%
K = 8%
T = 18%

LA 318 TRAFFIC DATA:
2015 A.D.T.= 2800
2035 A.D.T.= 4165
D = INFORMATION NOT AVAILABLE
K = INFORMATION NOT AVAILABLE
T = 38% (NORTH OF US 90)
T = 10% (SOUTH OF US 90)

US 90 DESIGN SPEED (MAINLINE) = 70 M.P.H.
LA 318 DESIGN SPEED = 60 M.P.H.
FRONTAGE ROAD DESIGN SPEED = 55 M.P.H.
LOCAL ACCESS ROAD DESIGN SPEED = 40 M.P.H.

US 90 ROADWAY CLASSIFICATION: FREEWAY (F-3)
LA 318 ROADWAY CLASSIFICATION: RURAL COLLECTOR (RC-3)
FRONTAGE ROAD CLASSIFICATION: RURAL COLLECTOR (RC-2)
LOCAL ROAD CLASSIFICATION: RURAL LOCAL (RL-2)

TYPE OF CONSTRUCTION:
PORTLAND CEMENT CONCRETE PAVEMENT, BASE COURSE, ASPHALTIC CONCRETE PAVEMENT, LG-54 GIRDER SPAN BRIDGE, COLD PLANE & OVERLAY, DRAINAGE STRUCTURES, SIGNING, STRIPING

DESIGN EXCEPTION NOTE:
A DESIGN EXCEPTION FOR A DIVIDED MEDIAN WIDTH OF 62' ALONG US 90 AND A DESIGN EXCEPTION FOR A RAISED MEDIAN ALONG LA 318 WAS APPLIED FOR ON JULY 1, 2015 AND IS PENDING APPROVAL.

NOTES:
THE 2006 EDITION OF THE LOUISIANA DOTD STANDARD SPECIFICATIONS FOR ROADS AND BRIDGES INCLUDING THE LATEST SUPPLEMENTAL SPECIFICATIONS, AS AMENDED BY THE PROJECT SPECIFICATIONS, SHALL GOVERN ON THIS PROJECT.

DATE	REVISION	DATE	RECOMMENDED	DATE	APPROVED

SCHEDULE OF REVISIONS

LENGTH OF PROJECT

	DESCRIPTION	ALGEBRAIC SUM OF ALL EQUATIONS	GROSS LENGTH	EXCEPTION	BRIDGE LENGTH		ROADWAY LENGTH	
	STATION TO STATION	FEET	FEET	FEET	FEET	MILES	FEET	MILES
US 90	132+40.00 - 201+75.00		6935.00		1887.00	0.357	5048.00	0.956
LA 318	310+48.48 - 352+00.00		4151.52				4151.52	0.786
NW FRONTAGE RD.	405+31.97 - 467+73.20		6241.23				6241.23	1.182
NE FRONTAGE RD.	500+26.00 - 525+36.45		2510.45				2510.45	0.475
SW FRONTAGE RD.	605+35.00 - 631+38.72		2603.72				2603.72	0.493
SE FRONTAGE RD.	700+26.00 - 730+97.64		3071.64				3071.64	0.582
LOCAL ACCESS RD.	10+00.00 - 13+37.99		337.99				337.99	0.064
LOCAL ACCESS RD.	419+32.55 - 464+57.68	-40594.56	4525.13				4525.13	0.857
	TOTAL LENGTH OF BRIDGES				1887.00	0.357		
	TOTAL LENGTH OF ROADWAY						28489.68	5.395
	TOTAL MILES				5.752			

SHEET NUMBER B-1
PARISH: ST. MARY
CONTROL SECTION
STATE PROJECT: H.004932
DESIGNED JC CHECKED CMH
DETAILED TW CHECKED JC
SERIES NUMBER
NO. REVISION OR CHANGE ORDER DESCRIPTION DATE BY
DEFINITIVE DESIGN DATE: 7/1/2015
TITLE SHEET & LAYOUT MAP
US 90 (FUTURE I-49) LA 318 INTERCHANGE
Stantec

A DESIGN EXCEPTION FOR DIVIDED MEDIAN WIDTH OF 62' WAS APPLIED FOR ON JULY 1, 2015 AND IS PENDING APPROVAL.

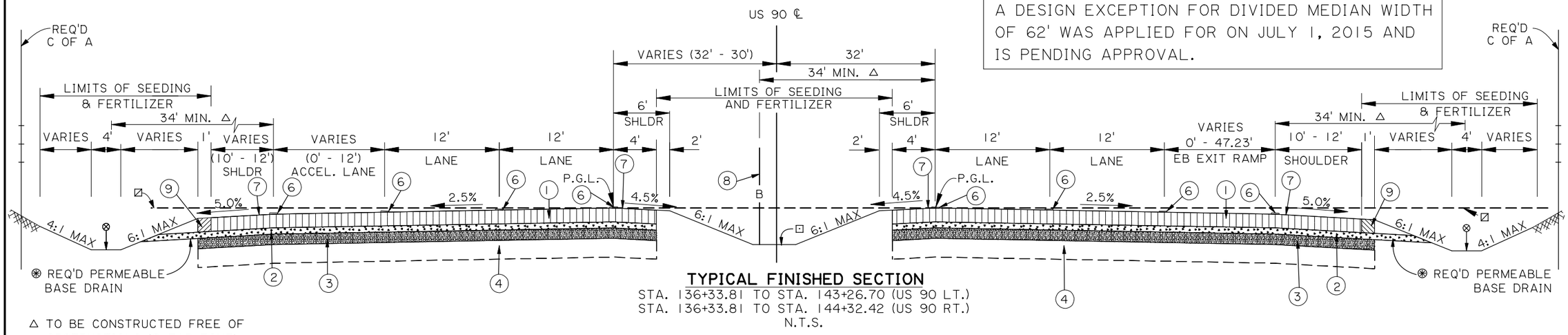

TYPICAL FINISHED SECTION

STA. 136+33.81 TO STA. 143+26.70 (US 90 LT.)
STA. 136+33.81 TO STA. 144+32.42 (US 90 RT.)
N.T.S.

△ TO BE CONSTRUCTED FREE OF OBSTRUCTIONS (CLEAR ZONE)

⊡ MEDIAN DITCH GRADE WHERE APPLICABLE

⊠ HORIZONTAL LINE THRU GRADE SHOWN ON PROFILE

⊗ LT./RT. DITCH GRADE WHERE APPLICABLE

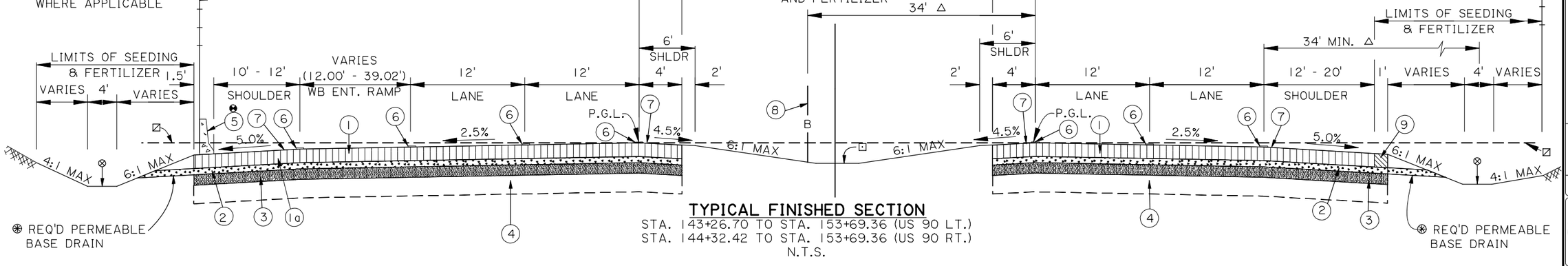

TYPICAL FINISHED SECTION

STA. 143+26.70 TO STA. 153+69.36 (US 90 LT.)
STA. 144+32.42 TO STA. 153+69.36 (US 90 RT.)
N.T.S.

DEFINITIVE DESIGN

PRELIMINARY	*Louisiana Department of Transportation and Development*
NOT TO BE USED FOR CONSTRUCTION, BIDDING, RECORDATION, CONVEYANCE, SALES OR AS THE BASIS FOR THE ISSUANCE OF A PERMIT.	*ENGINEER: JOSEPH CAINS III* *LICENSE #: 33670* *DATE: JULY 2015*

⊛ BARRIER APPLIES, LT: STA 143+26.70 TO 153+69.36

LEGEND (US 90)

(1) 11" PORTLAND CEMENT CONCRETE PAVEMENT OR 2" OF SUPERPAVE AC WEARING COURSE (LEVEL 2F) AND 9" SUPERPAVE AC BINDER COURSE (LEVEL 2)
(1a) 11" PORTLAND CEMENT CONCRETE PAVEMENT (MOMENT SLAB)
(2) 4" CLASS II BASE COURSE (STONE OR RECYCLED PORTLAND CEMENT CONCRETE)
(3) 8" CLASS II BASE COURSE (SOIL CEMENT)
(4) 12" SUBGRADE LAYER (TREATED)
⊛ (5) REQ'D 32" BARRIER (CLASS A CONC.)
(6) PAVEMENT MARKERS AND STRIPING
(7) REQ'D GROUND IN RUMBLE STRIPS (US 90 ONLY)
(8) REQ'D HIGH TENSION CABLE BARRIER (NCHRP 350 OR MASH TEST LEVEL 3)
(9) EMBANKMENT MATERIAL

NOTES

1. PLACEMENT OF STRIPING AND REFLECTORIZED MARKERS SHALL BE IN ACCORDANCE WITH STANDARD PLAN NOS. PM-01, 03, 04 AND SC-01 AND THE MOST RECENT VERSION OF THE "MANUAL ON UNIFORM TRAFFIC CONTROL DEVICES."
2. THE SECTION TO BE USED AT ANY PARTICULAR LOCATION SHALL BE AS SHOWN ON THE CROSS SECTIONS, UNLESS DIRECTED OTHERWISE BY THE PROJECT ENGINEER.
3. DESIGN CRITERIA - US 90 MAINLINE: RURAL FREEWAY (F-3)
   DESIGN SPEED = 70 M.P.H.
⊛ 4. PERMEABLE BASE DRAINS WILL BE REQUIRED ALONG US 90 FOR THE FULL PROJECT LENGTH
   REQ'D PERMEABLE BASE DRAINS INCLUDE THE EXTENSION OF GEOTEXTILE FABRIC AND NON-PLASTIC EMBANKMENT (STONE) AT SAG LOCATIONS AND AT 250' MAX INTERVALS.
   THE WIDTH OF THE BASE DRAINS IS 10'.
5. SHOULDER WEDGES WILL BE REQUIRED FOR ALL ASPHALT ROADWAY CONSTRUCTION.
   SEE LADOTD'S SHOULDER WEDGE DETAIL FOR MORE INFORMATION.

SHEET NUMBER B-2
PARISH ST. MARY
CONTROL SECTION 424-05
STATE PROJECT H.004932
DESIGNED JC CHECKED CMH
DETAILED TW CHECKED JC
SERIES NUMBER 1 OF 8
DEFINITIVE DESIGN DATE: 7/1/2015
NO. DATE REVISION OR CHANGE ORDER DESCRIPTION BY
TYPICAL SECTIONS & DETAILS US 90
US 90 (FUTURE I-49) LA 318 INTERCHANGE
Stantec

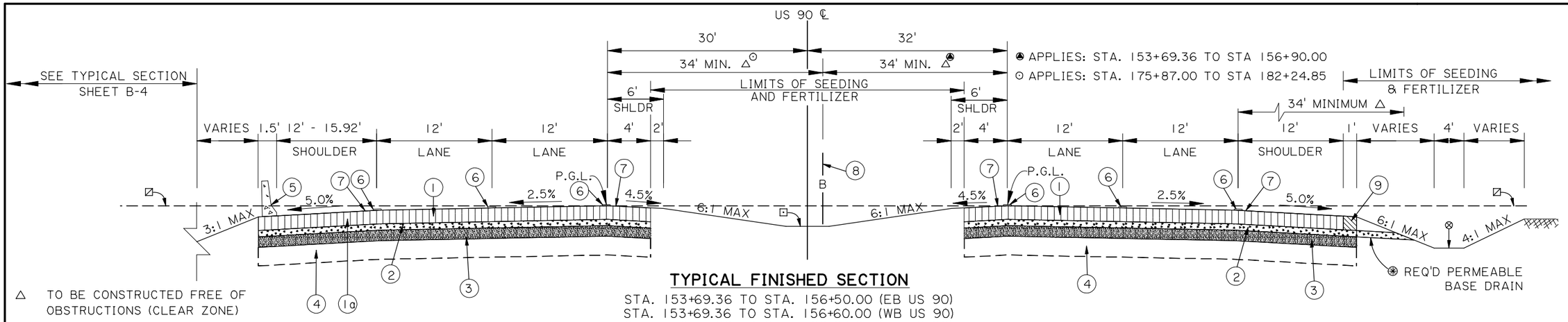

TYPICAL FINISHED SECTION

STA. 153+69.36 TO STA. 156+50.00 (EB US 90)
STA. 153+69.36 TO STA. 156+60.00 (WB US 90)
STA. 176+17.00 TO STA. 182+24.85 (EB US 90)
STA. 176+27.00 TO STA. 182+24.85 (WB US 90)
N.T.S.

△ TO BE CONSTRUCTED FREE OF OBSTRUCTIONS (CLEAR ZONE)

⊠ HORIZONTAL LINE THROUGH GRADE SHOWN ON PROFILE

⊗ LT./RT. DITCH GRADE WHERE APPLICABLE.

⊡ MEDIAN DITCH GRADE WHERE APPLICABLE.

A DESIGN EXCEPTION FOR DIVIDED MEDIAN WIDTH OF 62' WAS APPLIED FOR ON JULY 1, 2015 AND IS PENDING APPROVAL.

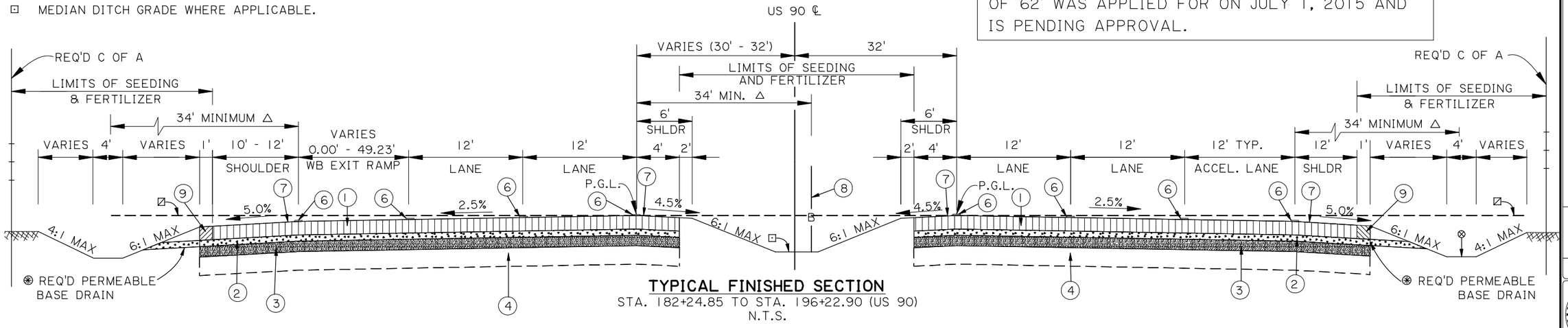

TYPICAL FINISHED SECTION

STA. 182+24.85 TO STA. 196+22.90 (US 90)
N.T.S.

LEGEND (US 90)

(1) 11" PORTLAND CEMENT CONCRETE PAVEMENT OR 2" OF SUPERPAVE AC WEARING COURSE (LEVEL 2F) AND 9" SUPERPAVE AC BINDER COURSE (LEVEL 2)
(1a) 11" PORTLAND CEMENT CONCRETE PAVEMENT (MOMENT SLAB)
(2) 4" CLASS II BASE COURSE (STONE OR RECYCLED PORTLAND CEMENT CONCRETE)
(3) 8" CLASS II BASE COURSE (SOIL CEMENT)
(4) 12" SUBGRADE LAYER (TREATED)
(5) REQ'D 32" BARRIER (CLASS A CONC.)
(6) PAVEMENT MARKERS AND STRIPING
(7) REQ'D GROUND IN RUMBLE STRIPS (US 90 ONLY)
(8) REQ'D HIGH TENSION CABLE BARRIER (NCHRP 350 OR MASH TEST LEVEL 3)
(9) EMBANKMENT MATERIAL

DEFINITIVE DESIGN

PRELIMINARY	*Louisiana Department of Transportation and Development*
NOT TO BE USED FOR CONSTRUCTION, BIDDING, RECORDATION, CONVEYANCE, SALES OR AS THE BASIS FOR THE ISSUANCE OF A PERMIT.	*ENGINEER: JOSEPH CAINS III* *LICENSE #: 33670* *DATE: JULY 2015*

NOTES

1. PLACEMENT OF STRIPING AND REFLECTORIZED MARKERS SHALL BE IN ACCORDANCE WITH STANDARD PLAN NOS. PM-01, PM-03, PM-04, AND SC-01 AND THE MOST RECENT VERSION OF THE "MANUAL ON UNIFORM TRAFFIC CONTROL DEVICES."
2. THE SECTION TO BE USED AT ANY PARTICULAR LOCATION SHALL BE AS SHOWN ON THE CROSS SECTIONS, UNLESS DIRECTED OTHERWISE BY THE PROJECT ENGINEER.
3. DESIGN CRITERIA - US 90 MAINLINE: RURAL FREEWAY (F-3) DESIGN SPEED = 70 M.P.H.
⊛ 4. PERMEABLE BASE DRAINS WILL BE REQUIRED ALONG US 90 FOR THE FULL PROJECT LENGTH REQ'D PERMEABLE BASE DRAINS INCLUDE THE EXTENSION OF GEOTEXTILE FABRIC AND NON-PLASTIC EMBANKMENT (STONE) AT SAG LOCATIONS AND AT 250' INTERVALS. THE WIDTH OF THE BASE DRAINS IS 10'.
5. SHOULDER WEDGES WILL BE REQUIRED FOR ALL ASPHALT ROADWAY CONSTRUCTION. SEE LADOTD'S SHOULDER WEDGE DETAIL FOR MORE INFORMATION.

SHEET NUMBER B-3
PARISH ST. MARY
CONTROL SECTION 424-05
STATE PROJECT H.004932
DESIGNED JC CHECKED CMH
DETAILED TW CHECKED JC
SERIES NUMBER 2 OF 8

DEFINITIVE DESIGN DATE: 7/1/2015

NO.	DATE	REVISION OR CHANGE ORDER DESCRIPTION	BY

TYPICAL SECTIONS & DETAILS US 90

US 90 (FUTURE I-49) LA 318 INTERCHANGE

Stantec

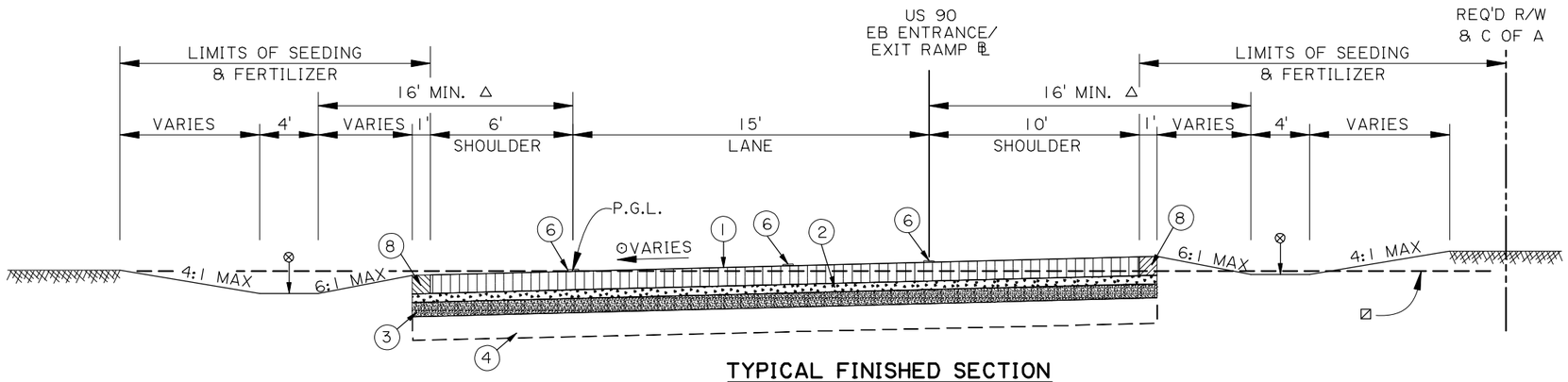

TYPICAL FINISHED SECTION

STA. 807+97.70 TO STA. 848+01.76 (US 90 EB RAMP)
N.T.S.

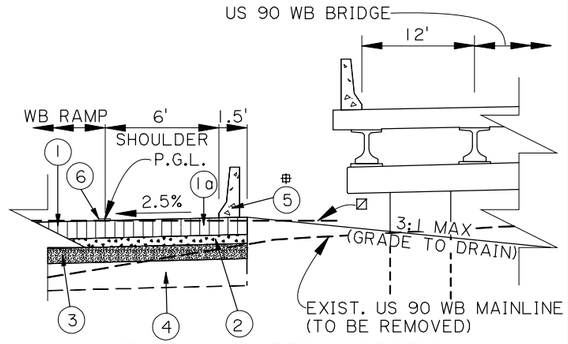

TYPICAL PARTIAL SECTION

(US 90 WB ENTRANCE/EXIT RAMP)
STA. 220+66.94 TO STA. 239+54.14
N.T.S.

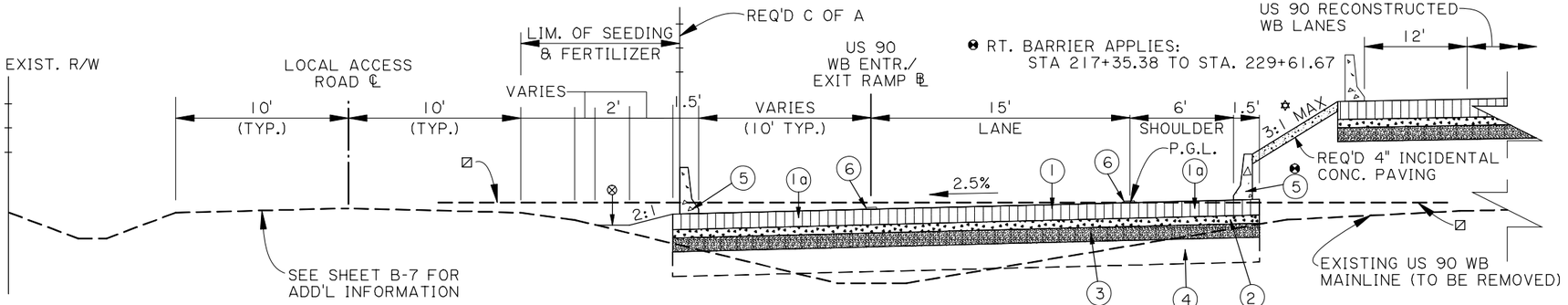

TYPICAL FINISHED SECTION

STA. 217+35.38 TO STA. 229+80.30 (US 90 WB ENT. RAMP)
N.T.S.

△ TO BE CONSTRUCTED FREE OF OBSTRUCTIONS (CLEAR ZONE)

⊠ HORIZONTAL LINE THROUGH GRADE SHOWN ON PROFILE

⊗ LT. /RT. DITCH GRADE WHERE APPLICABLE

✲ 3:1 SLOPE BETWEEN US 90 MAINLINE AND WB RAMPS APPLIES FROM STA. 217+35.38 TO 220+66.94 & FROM STA. 239+54.14 TO STA. 245+93.17. SEE TYPICAL PARTIAL SECTION ON THIS SHEET FOR SECTION ALONG THE US 90 WB BRIDGE.

DEFINITIVE DESIGN

PRELIMINARY	*Louisiana Department of Transportation and Development*
NOT TO BE USED FOR CONSTRUCTION, BIDDING, RECORDATION, CONVEYANCE, SALES OR AS THE BASIS FOR THE ISSUANCE OF A PERMIT.	*ENGINEER: JOSEPH CAINS III* *LICENSE #: 33670* *DATE: JULY 2015*

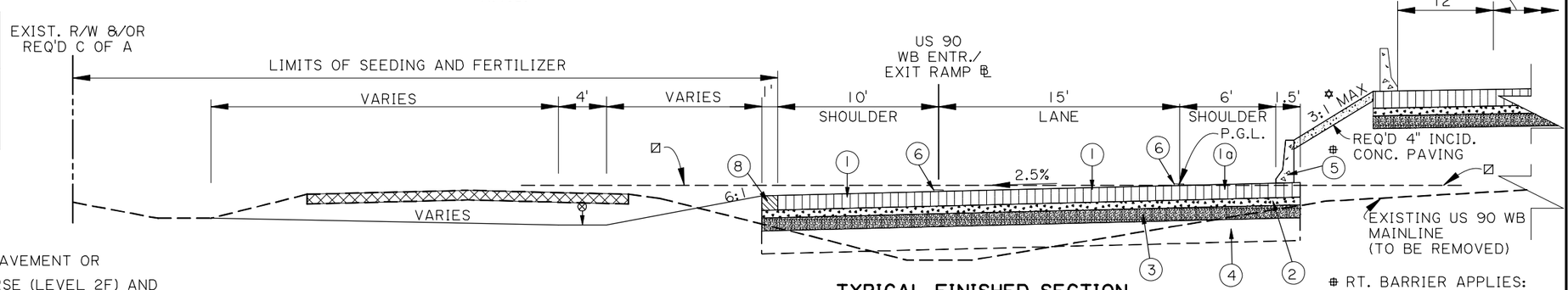

TYPICAL FINISHED SECTION

STA. 230+32.87 TO STA. 245+93.17 (US 90 WB EXIT RAMP)
N.T.S.

⊕ RT. BARRIER APPLIES: STA 230+60.09 TO STA. 245+93.17

LEGEND (US 90)

(1) 11" PORTLAND CEMENT CONCRETE PAVEMENT OR 2" OF SUPERPAVE AC WEARING COURSE (LEVEL 2F) AND 9" SUPERPAVE AC BINDER COURSE (LEVEL 2)
(1a) 11" PORTLAND CEMENT CONCRETE PAVEMENT (MOMENT SLAB)
(2) 4" CLASS II BASE COURSE (STONE OR RECYCLED PORTLAND CEMENT CONCRETE)
(3) 8" CLASS II BASE COURSE (SOIL CEMENT)
(4) 12" SUBGRADE LAYER (TREATED)
⊕ (5) REQ'D 32" BARRIER (CLASS A CONC.)
(6) PAVEMENT MARKERS AND STRIPING
(7) REQ'D GROUND-IN RUMBLE STRIPS (US 90 ONLY)
(8) EMBANKMENT MATERIAL

NOTES

1. PLACEMENT OF STRIPING AND REFLECTORIZED MARKERS SHALL BE IN ACCORDANCE WITH STANDARD PLAN NOS. PM-01, PM-03, AND PM-04, SC-01 AND THE MOST RECENT VERSION OF THE "MANUAL ON UNIFORM TRAFFIC CONTROL DEVICES."
2. THE SECTION TO BE USED AT ANY PARTICULAR LOCATION SHALL BE AS SHOWN ON THE CROSS SECTIONS, UNLESS DIRECTED OTHERWISE BY THE PROJECT ENGINEER.
3. DESIGN CRITERIA - US 90 MAINLINE: RURAL FREEWAY (F-3) DESIGN SPEED = 70 M.P.H.
⊙ 4. SEE US 90 EB RAMP PLAN & PROFILE SHEETS FOR SUPERELEVATION RATES AND TRANSITION LENGTHS
5. SHOULDER WEDGES WILL BE REQUIRED FOR ALL ASPHALT ROADWAY CONSTRUCTION. SEE LADOTD'S SHOULDER WEDGE DETAIL FOR MORE INFORMATION.

SHEET NUMBER B-4
PARISH ST. MARY
CONTROL SECTION 424-05
STATE PROJECT H.004932
DESIGNED JC
CHECKED CMH
DETAILED TW
CHECKED JC
SERIES NUMBER 3 OF 8

DEFINITIVE DESIGN
DATE: 7/1/2015
NO. DATE REVISION OR CHANGE ORDER DESCRIPTION BY

TYPICAL SECTIONS & DETAILS
US 90 RAMPS
US 90 (FUTURE I-49) LA 318 INTERCHANGE

Stantec

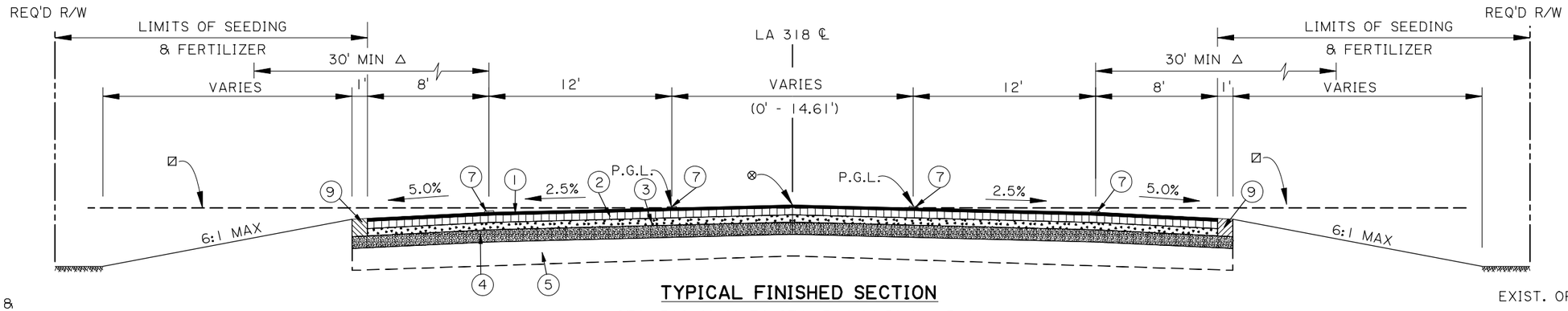

TYPICAL FINISHED SECTION

STA. 310+48.48 TO STA. 314+66.58 (LA 318)

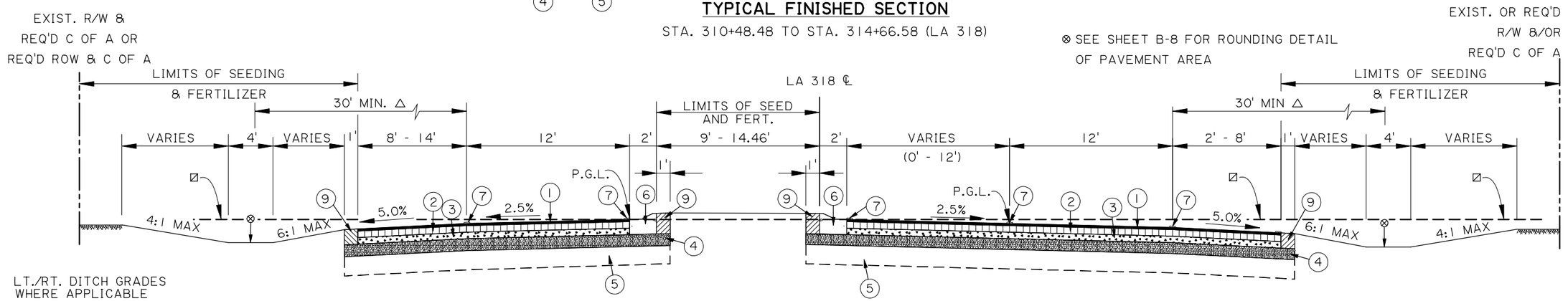

TYPICAL FINISHED SECTION

STA. 314+66.58 TO STA. 320+35.58 (LA 318)
STA. 334+27.62 TO STA. 338+26.34 (LA 318)

A DESIGN EXCEPTION FOR A RAISED MEDIAN WAS APPLIED FOR ON JULY 1, 2015 AND IS PENDING APPROVAL.

⊗ LT./RT. DITCH GRADES WHERE APPLICABLE

△ TO BE CONSTRUCTED FREE OF OBSTRUCTIONS (CLEAR ZONE)

Ø HORIZONTAL LINE THROUGH GRADE SHOWN ON PROFILE

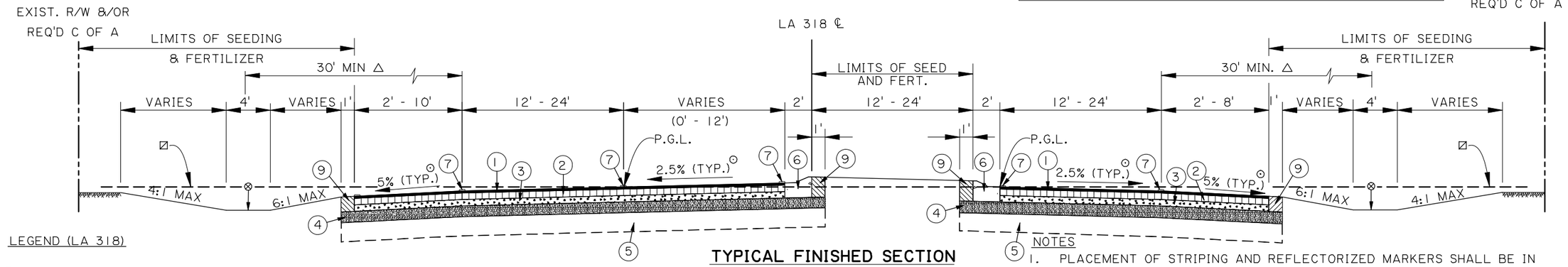

TYPICAL FINISHED SECTION

STA. 320+35.58 TO STA. 330+02.68 (LA 318)
⊙ STA. 338+26.34 TO STA. 342+94.34 (LA 318)

LEGEND (LA 318)

1. 2" SUPERPAVE AC WEARING COURSE (LEVEL 1)
2. 4" SUPERPAVE AC BINDER COURSE (LEVEL 1)
3. 4" CLASS II BASE COURSE (STONE OF RECYCLED PORTLAND CEMENT CONCRETE)
4. 8" CLASS II BASE COURSE (SOIL CEMENT)
5. 12" SUBGRADE LAYER (TREATED)
6. 2' COMBINATION CURB AND GUTTER (3" MOUNTABLE)
7. PAVEMENT MARKERS AND STRIPING
8. REQ'D 54" PIER PROTECTION (CLASS A CONC.)
9. EMBANKMENT MATERIAL

NOTES

1. PLACEMENT OF STRIPING AND REFLECTORIZED MARKERS SHALL BE IN ACCORDANCE WITH STANDARD PLAN NOS. PM-01 AND THE MOST RECENT VERSION OF THE "MANUAL ON UNIFORM TRAFFIC CONTROL DEVICES."
2. THE SECTION TO BE USED AT ANY PARTICULAR LOCATION SHALL BE AS SHOWN ON THE CROSS SECTIONS, UNLESS DIRECTED OTHERWISE BY THE PROJECT ENGINEER.
3. DESIGN CRITERIA - LA 318 : RURAL COLLECTOR (RC-3) DESIGN SPEED = 60 MPH
4. ⊙ SEE LA 318 PLAN & PROFILE SHEETS FOR SUPERELEVATION RATES AND TRANSITION LENGTHS.
5. SHOULDER WEDGES WILL BE REQUIRED FOR ALL ASPHALT ROADWAY CONSTRUCTION. SEE LADOTD'S SHOULDER WEDGE DETAIL FOR MORE INFO.

DEFINITIVE DESIGN

PRELIMINARY	*Louisiana Department of Transportation and Development*
NOT TO BE USED FOR CONSTRUCTION, BIDDING, RECORDATION, CONVEYANCE, SALES OR AS THE BASIS FOR THE ISSUANCE OF A PERMIT.	*ENGINEER: JOSEPH CAINS III* *LICENSE #: 33670* *DATE: JULY 2015*

SHEET NUMBER B-5

PARISH	CONTROL SECTION	STATE PROJECT
ST. MARY	239-31	H.004932

DESIGNED	CHECKED	DETAILED	CHECKED	SERIES NUMBER
JC	CMH	TW	JC	4 OF 8

DEFINITIVE DESIGN
DATE: 7/1/2015

NO.	DATE	REVISION OR CHANGE ORDER DESCRIPTION	BY

TYPICAL SECTIONS & DETAILS
LA 318

US 90 (FUTURE I-49) LA 318 INTERCHANGE

Stantec

⊗ LT./RT. DITCH GRADES WHERE APPLICABLE

△ TO BE CONSTRUCTED FREE OF OBSTRUCTIONS (CLEAR ZONE)

⊠ HORIZONTAL LINE THROUGH GRADE SHOWN ON PROFILE

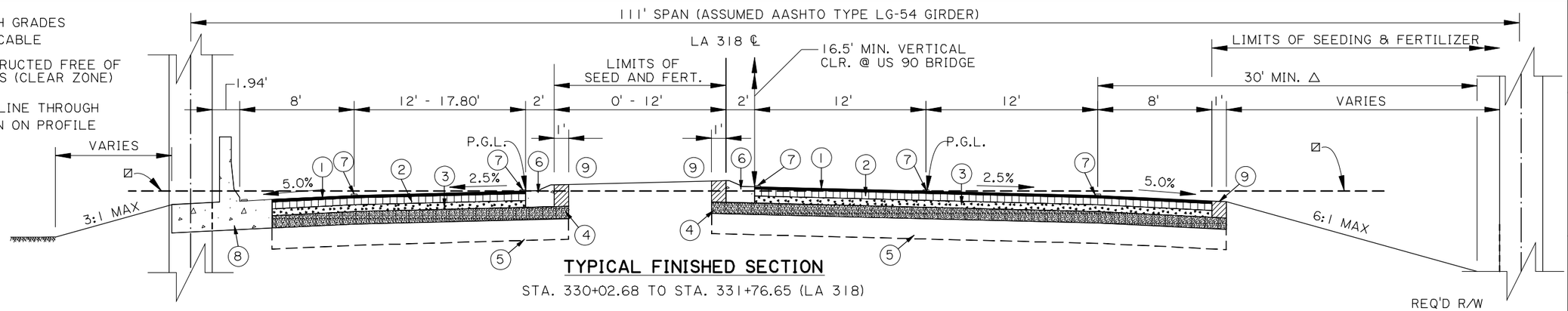

TYPICAL FINISHED SECTION

STA. 330+02.68 TO STA. 331+76.65 (LA 318)

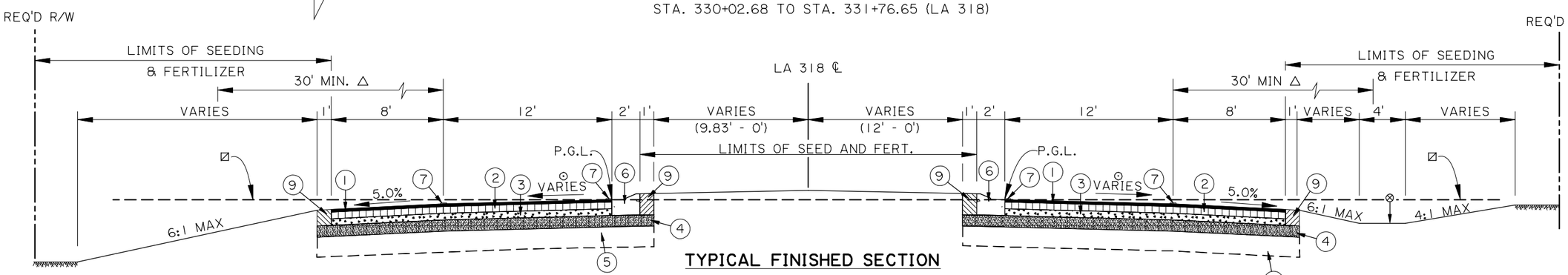

TYPICAL FINISHED SECTION

⊙ STA. 342+94.34 TO STA. 345+87.73 (LA 318)

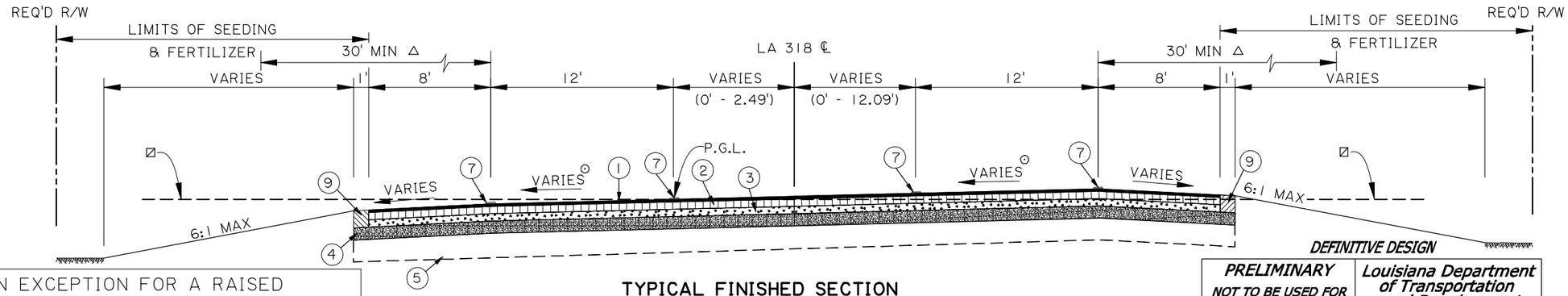

TYPICAL FINISHED SECTION

⊙ STA. 345+87.73 TO STA. 349+09.43 (LA 318)

A DESIGN EXCEPTION FOR A RAISED MEDIAN WAS APPLIED FOR ON JULY 1, 2015 AND IS PENDING APPROVAL.

LEGEND (LA 318)

1. 2" SUPERPAVE AC WEARING COURSE (LEVEL 1)
2. 4" SUPERPAVE AC BINDER COURSE (LEVEL 1
3. 4" CLASS II BASE COURSE (STONE OF RECYCLED PORTLAND CEMENT CONCRETE)
4. 8" CLASS II BASE COURSE (SOIL CEMENT)
5. 12" SUBGRADE LAYER (TREATED)
6. 2' COMBINATION CURB AND GUTTER (3" MOUNTABLE)
7. PAVEMENT MARKERS AND STRIPING
8. REQ'D PIER PROTECTION (CLASS A CONC.)
9. EMBANKMENT MATERIAL

NOTES

1. PLACEMENT OF STRIPING AND REFLECTORIZED MARKERS SHALL BE IN ACCORDANCE WITH STANDARD PLAN NOS. PM-01 AND THE MOST RECENT VERSION OF THE "MANUAL ON UNIFORM TRAFFIC CONTROL DEVICES."
2. THE SECTION TO BE USED AT ANY PARTICULAR LOCATION SHALL BE AS SHOWN ON THE CROSS SECTIONS, UNLESS DIRECTED OTHERWISE BY THE PROJECT ENGINEER.
3. DESIGN CRITERIA - LA 318 : RURAL COLLECTOR (RC-3) DESIGN SPEED = 60 MPH
4. ⊙ SEE LA 318 PLAN & PROFILE SHEETS FOR SUPERELEVATION RATES AND TRANSITION LENGTHS.
5. SHOULDER WEDGES WILL BE REQUIRED FOR ALL ASPHALT ROADWAY CONSTRUCTION. SEE LADOTD'S SHOULDER WEDGE DETAIL FOR MORE INFO.

DEFINITIVE DESIGN

PRELIMINARY	Louisiana Department of Transportation and Development
NOT TO BE USED FOR CONSTRUCTION, BIDDING, RECORDATION, CONVEYANCE, SALES OR AS THE BASIS FOR THE ISSUANCE OF A PERMIT.	ENGINEER: JOSEPH CAINS III LICENSE #: 33670 DATE: JULY 2015

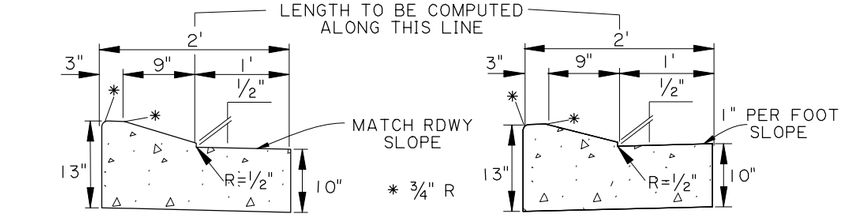

DETAIL OF 2' COMBINATION CURB & GUTTER (MOUNTABLE)

DRAINAGE FROM CURB (N.T.S.)

DETAIL OF 2' COMBINATION CURB & GUTTER (MOUNTABLE)

DRAINAGE TO CURB (N.T.S.)

SHEET NUMBER	B-6
PARISH	ST. MARY
CONTROL SECTION	239-31
STATE PROJECT	H.004932
DESIGNED JC / CHECKED CMH	
DETAILED TW / CHECKED JC	
SERIES NUMBER	5 OF 8

DEFINITIVE DESIGN DATE: 7/1/2015

NO.	DATE	REVISION OR CHANGE ORDER DESCRIPTION	BY

TYPICAL SECTIONS & DETAILS
LA 318

US 90 (FUTURE I-49) LA 318 INTERCHANGE

Stantec

- ⊠ HORIZONTAL LINE THROUGH GRADE SHOWN ON PROFILE
- ⊛ VARIES (0.00% - 4.10%)
- ✳ VARIES (2.7% TO NORMAL CROWN)
- ⊕ VARIES (0.16' - 0.73')
- ⊗ VARIES (0.16' - 0.26')
- △ TO BE CONSTRUCTED FREE OF OBSTRUCTIONS (CLEAR ZONE)
- ⊡ BASED ON SURVEYED LOCAL ACCESS ROAD ALIGNMENT
- ⊖ CLEAR ZONE WIDTH IN ACCORDANCE WITH AASHTO VERY LOW VOLUME LOCAL RD. GUIDELINES
- ⍋ AVERAGE DEPTH INCLUDES REPLACEMENT OF 1.5" COLD PLANED ASPHALT

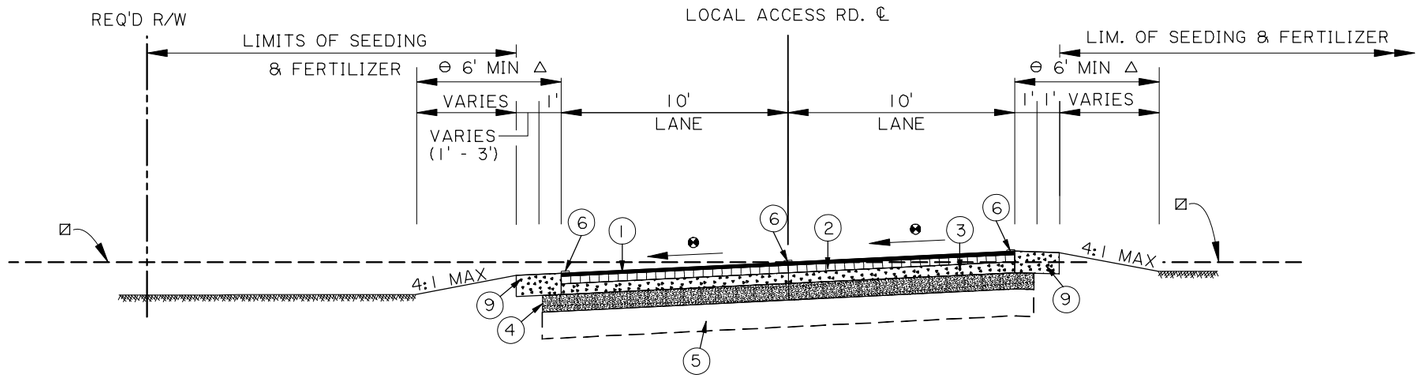

TYPICAL FINISHED SECTION

STA. 10+11.00 TO 13+37.99

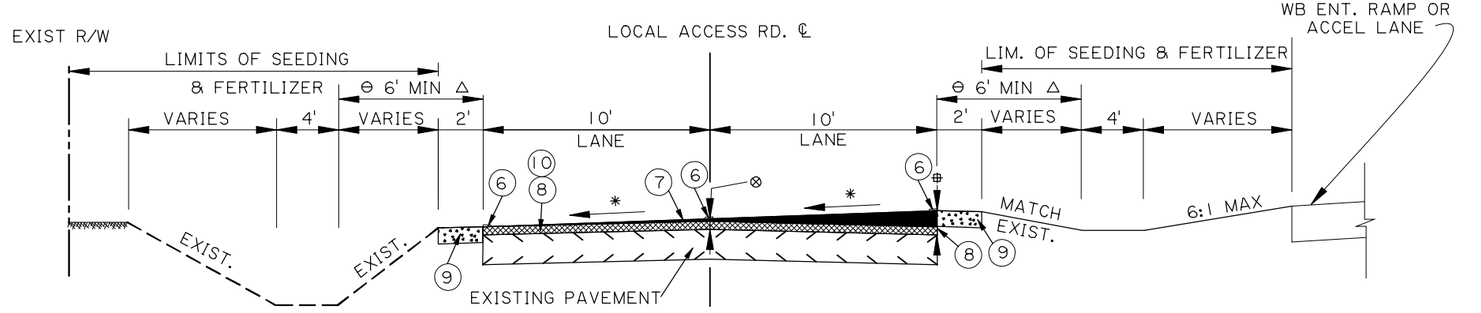

TYPICAL FINISHED SECTION

⊡ STA. 419+32.55 TO 420+12.55

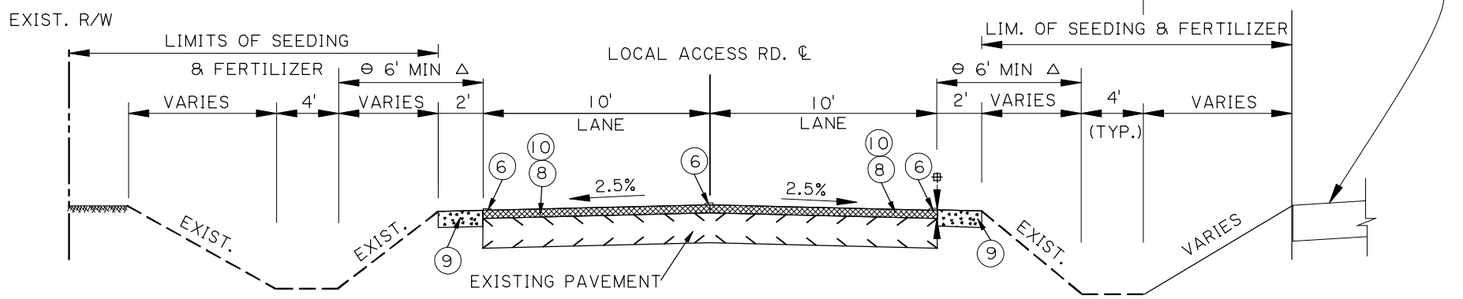

TYPICAL FINISHED SECTION

⊡ STA. 420+12.55 TO 464+57.68

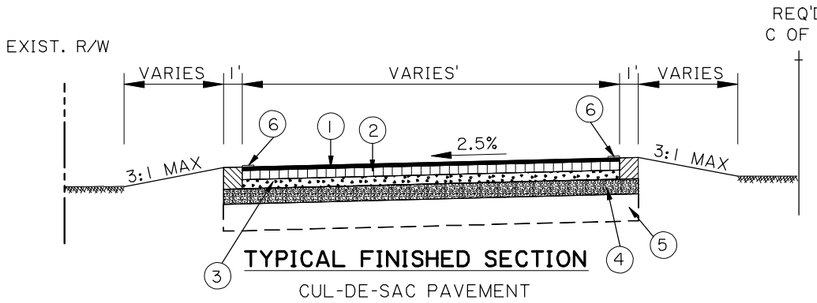

TYPICAL FINISHED SECTION

CUL-DE-SAC PAVEMENT

NOTES

1. PLACEMENT OF STRIPING AND REFLECTORIZED MARKERS SHALL BE IN ACCORDANCE WITH STANDARD PLAN NOS. PM-01 AND SC-01 AND THE MOST RECENT VERSION OF THE "MANUAL ON UNIFORM TRAFFIC CONTROL DEVICES."
2. THE SECTION TO BE USED AT ANY PARTICULAR LOCATION SHALL BE AS SHOWN ON THE CROSS SECTIONS, UNLESS DIRECTED OTHERWISE BY THE PROJECT ENGINEER.
3. LOCAL ACCESS ROAD SHALL BE REHABILITATED IN ACCORDANCE WITH LADOTD PAVEMENT/ REHABILITATION/REPLACEMENT MIN. DESIGN GUIDELINES. (RURAL)
4. SHOULDER WEDGES WILL BE REQUIRED FOR ALL ASPHALT ROADWAY CONSTRUCTION. SEE LADOTD'S SHOULDER WEDGE DETAIL FOR MORE INFO.

LEGEND (LOCAL ACCESS RD.)

(1) 1.5" SUPERPAVE AC WEARING COURSE (LEVEL 1)
(2) 2" SUPERPAVE AC BINDER COURSE (LEVEL 1)
(3) 4" CLASS II BASE COURSE (STONE OF RECYCLED PORTLAND CEMENT CONCRETE)
(4) 8" CLASS II BASE COURSE (SOIL CEMENT)
(5) 12" SUBGRADE LAYER (TREATED)
(6) PAVEMENT MARKERS AND STRIPING
(7) 2.8" (AVG. DEPTH) SUPERPAVE AC WEARING COURSE (LEVEL 1) ⍋
(8) 1.5" COLD PLANING & OVERLAY
(9) 7.5" AGGREGATE SHOULDER
(10) 2" SUPERPAVE AC WEARING COURSE (LEVEL 1)

DEFINITIVE DESIGN

PRELIMINARY	*Louisiana Department of Transportation and Development*
NOT TO BE USED FOR CONSTRUCTION, BIDDING, RECORDATION, CONVEYANCE, SALES OR AS THE BASIS FOR THE ISSUANCE OF A PERMIT.	*ENGINEER: JOSEPH CAINS III* *LICENSE #: 33670* *DATE: JULY 2015*

SHEET NUMBER B-7

PARISH	CONTROL SECTION	STATE PROJECT
ST. MARY	424-05	H.004932

DESIGNED JC CHECKED CMH
DETAILED TW CHECKED JC
SERIES NUMBER 6 OF 8

DEFINITIVE DESIGN DATE: 7/1/2015

NO.	DATE	REVISION OR CHANGE ORDER DESCRIPTION	BY

TYPICAL SECTIONS & DETAILS
LOCAL ACCESS RD.
US 90 (FUTURE I-49) LA 318 INTERCHANGE

Stantec

PRELIMINARY PLANS
I:\THB\LA 318_US 90 DB\Definitive Design\DGN\Sheets\002_Typical Section.dgn
6/30/2015 18:0

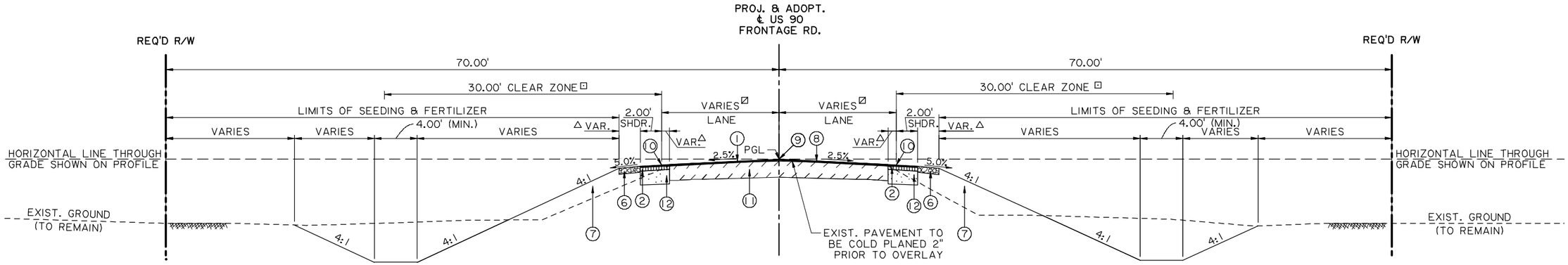

TYPICAL FINISHED SECTION (N.T.S.)

APPLIES: STA. 405+31.97 TO STA. 405+84.97 (NW)
STA. 524+85.49 TO STA. 525+36.45 (NE)
STA. 605+35.00 TO STA. 605+75.02 (SW)
STA. 729+32.64 TO STA. 730+97.64 (SE)

NOTE: TYPICAL SECTION SHOWS TRANSITIONS OF LANE WIDTHS AND AGGREGATE SHOULDERS. SEE PLAN AND PROFILE SHEET FOR LIMITS OF WIDENING AND OVERLAY AND FULL PAVEMENT SECTION CONSTRUCTION.

☑ 9.75' - 11.00' STA. 405+31.97 TO STA. 406+96.97
11.00' - 10.06' STA. 523+71.39 TO STA. 525+36.45
9.89' - 11.00' STA. 605+35.00 TO STA. 607+00.00
11.00' - 9.83' STA. 729+32.64 TO STA. 731+97.64

△ ROADWAY WIDTH (VARIES) & AGGR. SHOULDER WIDTH (0.00' TO 2.00') WIDENING APPLIES:
STA. 405+31.97 TO STA. 406+96.97
STA. 523+71.39 TO STA. 525+36.45
STA. 605+35.00 TO STA. 607+00.00
STA. 729+32.64 TO STA. 730+97.64

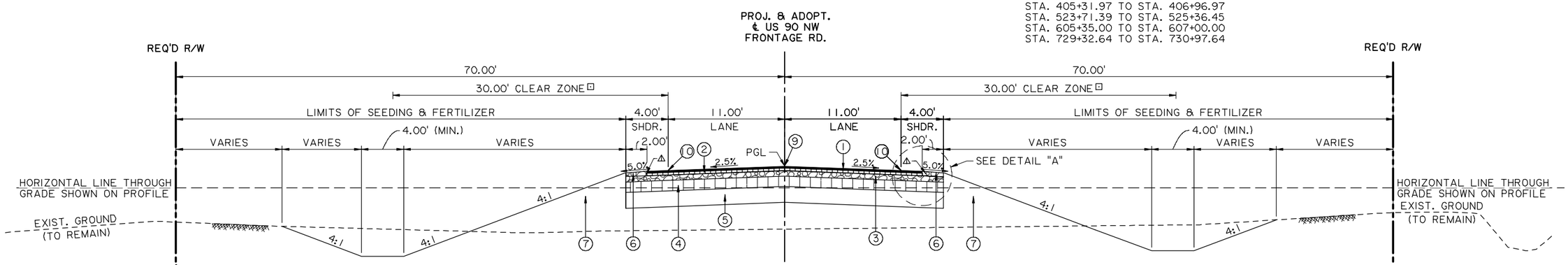

△ SHOULDER WEDGE REQUIRED. SEE SPECIAL DETAIL.

TYPICAL FINISHED SECTION (N.T.S.)

APPLIES: STA. 417+93.00 TO STA. 422+41.62
STA. 432+85.62 TO STA. 467+99.45

DESIGN SPEED = 55 MPH
FUNCTIONAL CLASS: RC-2

□ TO BE CONSTRUCTED FREE FROM OBSTRUCTIONS

LEGEND

(1) REQ'D 1.5" THICK SUPERPAVE ASPHALTIC CONCRETE (WEARING COURSE) (LEVEL 1)
(2) REQ'D 2" THICK SUPERPAVE ASPHALTIC CONCRETE (BINDER COURSE) (LEVEL 1)
(3) REQ'D CLASS II BASE COURSE (4" THICK) (CRUSHED STONE/RCYL. PCCP)
(4) REQ'D CLASS II BASE COURSE (8" THICK) (SOIL CEMENT)
(5) REQ'D 12" SUBGRADE LAYER (TREATED)
(6) REQ'D AGGREGATE SURFACE COURSE (THICKNESS VARIES)
(7) REQ'D EMBANKMENT
(8) REQ'D COLD PLANNING (THICKNESS VARIES)
(9) REQ'D PAVEMENT STRIPING & REFLECTORIZED MARKERS
(10) REQ'D PAVEMENT STRIPING
(11) EXIST. SURFACE & BASE (TO REMAIN)
(12) REQ'D. 8" THICK SUPERPAVE ASPHALTIC CONCRETE BASE COURSE (LEVEL 1)

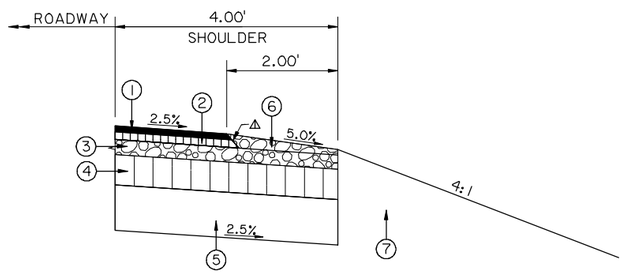

DETAIL "A" (N.T.S.)

DEFINITIVE DESIGN

PRELIMINARY
NOT TO BE USED FOR CONSTRUCTION, BIDDING, RECORDATION, CONVEYANCE, SALES OR AS THE BASIS FOR THE ISSUANCE OF A PERMIT.

Louisiana Department of Transportation and Development
ENGINEER: DENNIS M. HYMEL JR.
LICENSE #: 38172
DATE: JULY 2015

DEFINITIVE DESIGN

SHEET NUMBER B-8
PARISH ST. MARY
CONTROL SECTION 424-05, 239-31
STATE PROJECT H.004932
DESIGNED D. HYMEL
CHECKED P. OLIVIER
DETAILED G. ARIAS
CHECKED D. BINET
SERIES NUMBER
NO. DATE REVISION OR CHANGE ORDER DESCRIPTION BY

TYPICAL SECTIONS & DETAILS
US 90 @ LA 318 INTERCHANGE

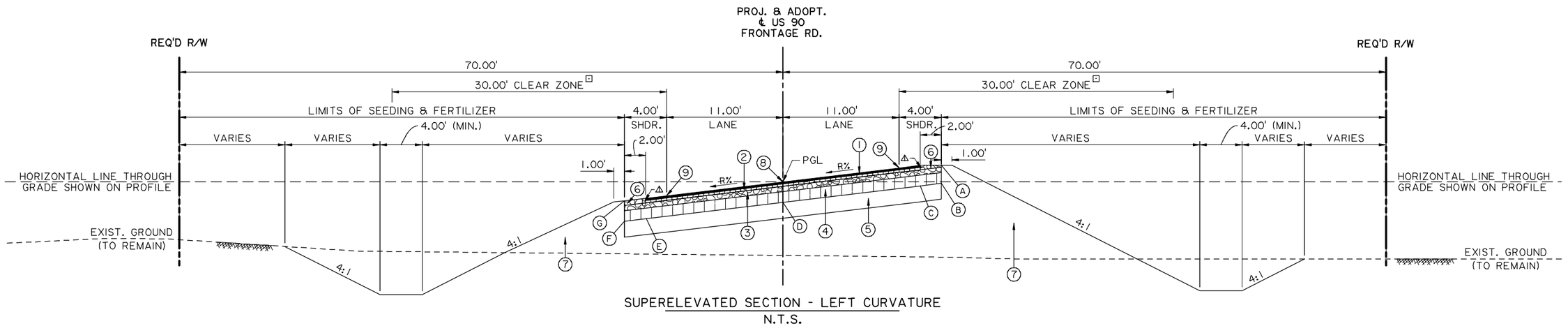

SUPERELEVATED SECTION - LEFT CURVATURE

N.T.S.

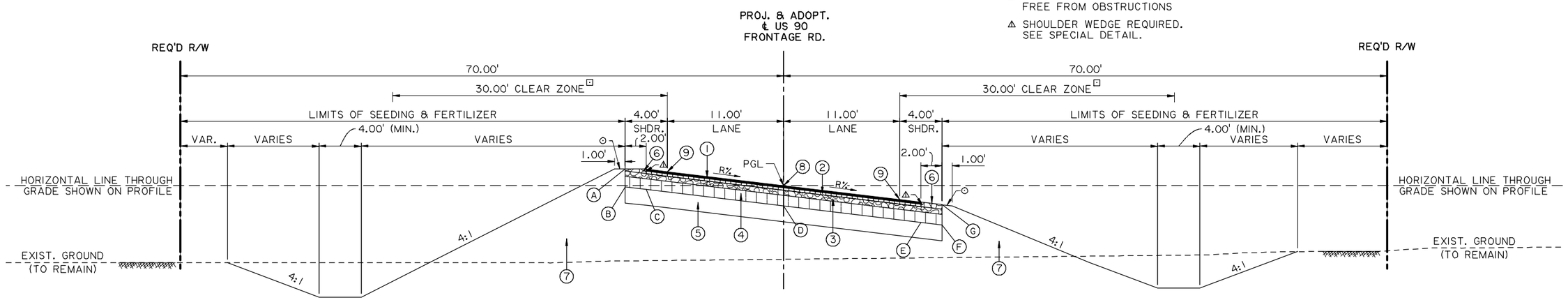

SUPERELEVATED SECTION - RIGHT CURVATURE

N.T.S.

⊡ TO BE CONSTRUCTED FREE FROM OBSTRUCTIONS

⚠ SHOULDER WEDGE REQUIRED. SEE SPECIAL DETAIL.

⊙ SAME RATE AS SHOULDER

VALUES OF Ⓐ THRU Ⓖ ARE THOSE SHOWN IN TABLE

SUPERELEVATION DETAILS WITH REFERENCE TO HORIZONTAL LINE THROUGH GRADE SHOWN ON PROFILE

DEGREE OF CURVE	R	A	B	C	D	E	F	G	TRANSITION LENGTH	INSIDE SHOULDER RATE	OUTSIDE SHOULDER RATE
01°58'30"	-5.00%	0.61'	-0.54'	-0.64'	-1.29'	-1.94'	-2.04'	-0.75'	170.00'	-5.00%	+2.00%
01°58'57"	+5.00%	0.61'	-0.54'	-0.64'	-1.29'	-1.94'	-2.04'	-0.75'	170.00'	+5.00%	-2.00%
02°12'13"	+5.20%	0.64'	0.03'	-0.61'	-1.29'	-1.97'	-2.07'	-0.78'	190.00'	+5.20%	-1.80%
02°51'53"	-6.40%	0.82'	0.21'	-0.46'	-1.29'	-2.12'	-2.25'	-0.96'	210.00'	-6.40%	+0.60%
03°26'58"	-7.60%	1.00'	0.39'	-0.30'	-1.29'	-2.28'	-2.43'	-1.14'	200.00'	-7.60%	-0.60%
03°29'45"	+7.60%	1.00'	0.39'	-0.30'	-1.29'	-2.28'	-2.43'	-1.14'	180.00'	+7.60%	+0.60%
03°30'47"	-7.60%	1.00'	0.39'	-0.30'	-1.29'	-2.28'	-2.43'	-1.14'	240.00'	-7.60%	-0.60%
04°37'14"	+9.00%	1.21'	0.60'	-0.12'	-1.29'	-2.46'	-2.64'	-1.35'	220.00'	+9.00%	+2.00%

NEGATIVE RATES DENOTE DOWN FROM LEFT TO RIGHT

LEGEND

1. REQ'D 1.5" THICK SUPERPAVE ASPHALTIC CONCRETE (WEARING COURSE) (LEVEL 1)
2. REQ'D 2" THICK SUPERPAVE ASPHALTIC CONCRETE (BINDER COURSE) (LEVEL 1)
3. REQ'D CLASS II BASE COURSE (4" THICK) (CRUSHED STONE/RCYL. PCCP)
4. REQ'D CLASS II BASE COURSE (8" THICK) (SOIL CEMENT)
5. REQ'D 12" SUBGRADE LAYER (TREATED)
6. REQ'D AGGREGATE SURFACE COURSE (THICKNESS VARIES)
7. REQ'D EMBANKMENT
8. REQ'D PAVEMENT STRIPING & REFLECTORIZED MARKERS
9. REQ'D PAVEMENT STRIPING

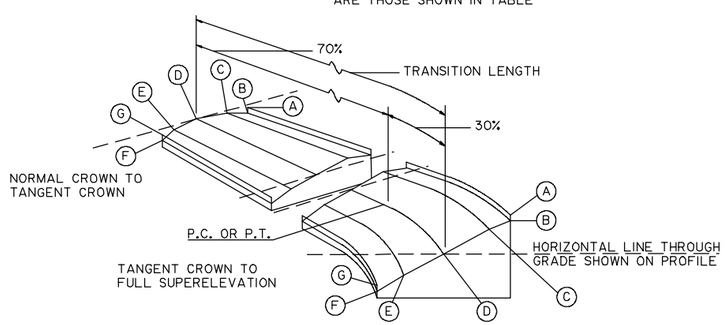

LOCATION OF TANGENT CROWN IN RELATION TO P.C. OR P.T. VARIES WITH TRANSITION LENGTH.

SUPERELEVATION TO BE ATTAINED BY ROTATING THE OUTSIDE LANES ABOUT POINT (C) UNTIL ROADWAY CROSS SLOPE EQUALS 2.5% (TANGENT CROWN). THE ENTIRE ROADWAY WILL THEN ROTATE ABOUT POINT (C) UNTIL A MAXIMUM CROSS SLOPE OF "R" IS OBTAINED. (SEE TABLE)

DETAIL OF SUPERELEVATION

DEFINITIVE DESIGN

PRELIMINARY
NOT TO BE USED FOR CONSTRUCTION, BIDDING, RECORDATION, CONVEYANCE, SALES OR AS THE BASIS FOR THE ISSUANCE OF A PERMIT.

Louisiana Department of Transportation and Development

ENGINEER: DENNIS M. HYMEL JR.
LICENSE #: 38172
DATE: JULY 2015

DEFINITIVE DESIGN

SHEET NUMBER B-9

PARISH	CONTROL SECTION	STATE PROJECT
ST. MARY	424-05, 239-31	H.004932

DESIGNED D. HYMEL
CHECKED P. OLIVIER
DETAILED G. ARIAS
CHECKED D. BINET

TYPICAL SECTIONS & DETAILS

US 90 @ LA 318 INTERCHANGE

NO.	DATE	REVISION OR CHANGE ORDER DESCRIPTION	BY

PRELIMINARY PLANS

I:\THB\LA 318_US 90 DB\Definitive Design\DGN\Sheets\002a_Typical Section.dgn

6/30/2015 18:0

LEGEND - EXISTING TOPOGRAPHY

CONTROL POINT
PAVEMENT EDGE
SHOULDER EDGE
GUARDRAIL TOP
HIGH BANK
WATER'S EDGE
HIGH WATER MARK
BOX CULVERT
EXIST. BOX CULVERT
PIPE CULVERT
CATCH BASIN TOP (ROUND)
DROP INLET TOP (ROUND)
DRAINAGE MANHOLE TOP
DITCH CENTERLINE
TREE
WOODS EDGE
TREE CLUSTER
HEDGE
BUSH
TREE LINE
FENCE LINE
GATE
CATTLE GUARD
PROPERTY CORNER
RIGHT OF WAY MONUMENT
SECTION CORNER
FENCE CORNER
TELEVISION CABLE
TELEVISION PEDESTAL
POWER POLE
DEADMAN
POWER LINE
POWER JUNCTION BOX
POWER VAULT
TRANSFORMER
COMBINATION POLE
POWER DROP
GAS WELL
OIL WELL

GAS LINE
GAS METER
GAS SERVICE (NO METER)
GAS REGULATOR
GAS RISER
GAS TEST BOX
GAS VALVE
GAS LINE/CASING
GAS VENT
SEWER LINE
SEWER MANHOLE TOP
SEWER BLOWOUT VALVE
SEWER CLEANOUT
SEPTIC TANK
SEWER PUMP (PRIVATE)
SEWER TREATMENT (INDIVIDUAL)
FEDERAL AID MARKER
TRAFFIC CONTROLLER BOX
TRAFFIC COUNTER
TRAFFIC SIGNAL
TRAFFIC SIGNAL SUPPORT POLE
TRAFFIC SIGN
TELEPHONE POLE
TELEPHONE LINE
TELEPHONE BOOTH
TELE CROSS CONNECT BOX
TELEPHONE PEDESTAL
TELEPHONE PRESSURE BOX
WATER LINE
WATER LINE/CASING
WATER CLEANOUT
WATER METER
WATER VALVE
WATER VALVE VAULT
WATER WELL
FIRE HYDRANT
BILLBOARD
FUEL PUMP
POST
SIGN POST
STORAGE TANK (ROUND)
MAILBOX
ORNAMENTAL LIGHT
FLAG POLE

PROPOSED LEGENDS

- PAVEMENT & SHOULDER REMOVAL
- REMOVAL OF DRIVES, WALKS, AND MISCELLANEOUS
- ASPHALT CONSTRUCTION
- CONCRETE CONSTRUCTION
- ASPHALT OR CONCRETE CONSTRUCTION (TO BE SELECTED BY DESIGN BUILDER)
- TEMPORARY DIVERSION PAVEMENT
- COLD PLANE AND OVERLAY
- DIRECTION OF TRAVEL

NOTES:
1. EXISTING UTILITIES SHOWN ARE APPROXIMATE. CONTRACTOR TO CONTACT LA ONE CALL PRIOR TO BEGINNING CONSTRUCTION TO VERIFY LOCATIONS.
2. EXISTING DRAINAGE STRUCTURES TO REMAIN UNLESS OTHERWISE NOTED.
3. ALL CB-01 INLETS HAVE A TYPE B GRATE UNLESS OTHERWISE SPECIFIED IN THE PLANS.

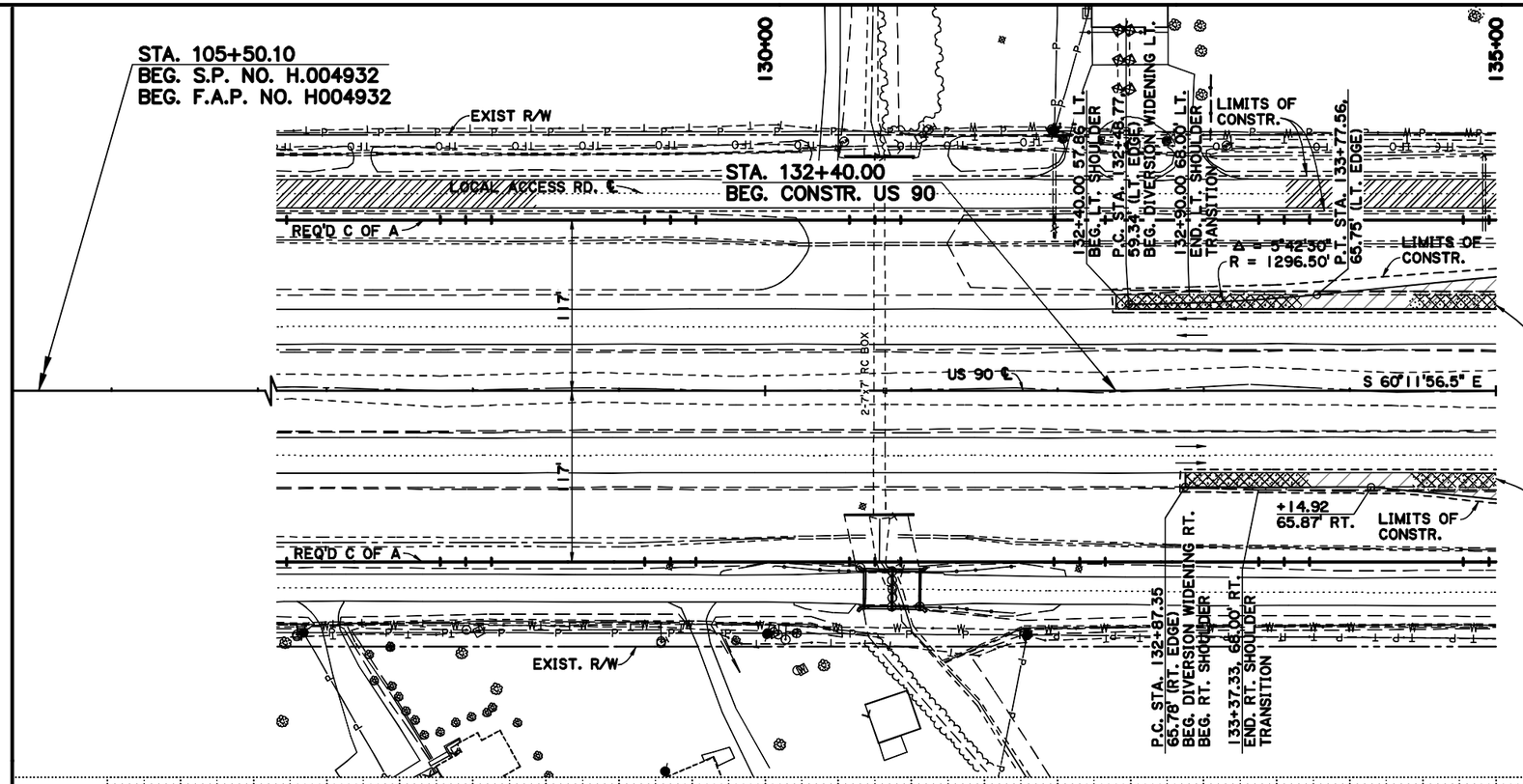

TYPICAL SECTION

TEMPORARY DIVERSION PAVEMENT CONNECTIONS

1. 8" PORTLAND CEMENT CONCRETE PAVEMENT OR 2" SUPERPAVE WEARING COURSE 6" SUPERPAVE BINDER COURSE
2. 12" CLASS II BASE COURSE
3. 10" TREATED SUBGRADE LAYER

DEFINITIVE DESIGN

PRELIMINARY

NOT TO BE USED FOR CONSTRUCTION, BIDDING, RECORDATION, CONVEYANCE, SALES OR AS THE BASIS FOR THE ISSUANCE OF A PERMIT.

Louisiana Department of Transportation and Development

ENGINEER: JOSEPH CAINS III
LICENSE #: 33670
DATE: JULY 2015

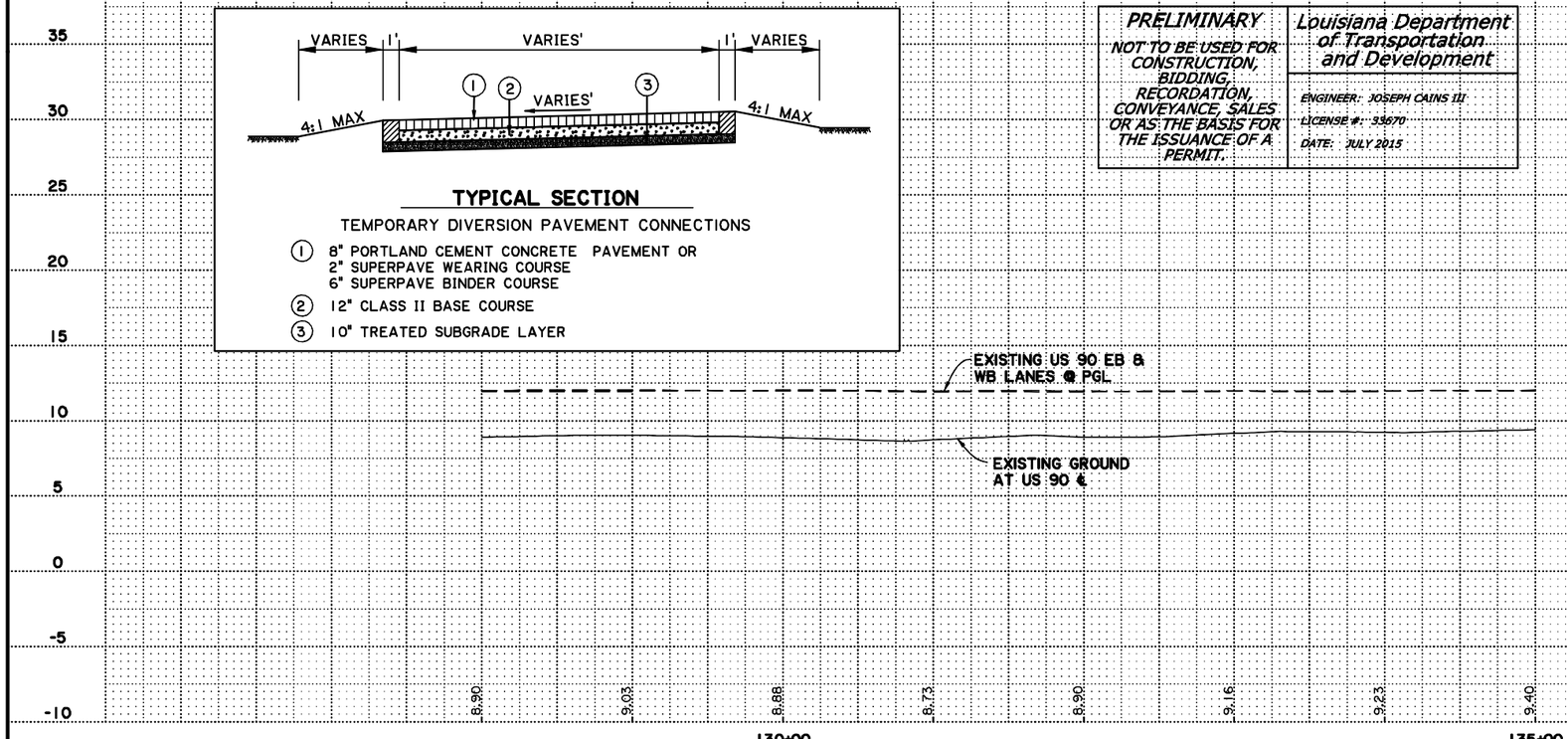

SHEET NUMBER B-10

PARISH	CONTROL SECTION	STATE PROJECT
ST. MARY	424-05	H.004932

DESIGNED JC
CHECKED CMH
DETAILED TW
CHECKED JC
SERIES NUMBER

DEFINITIVE DESIGN
DATE: 7/1/2015

NO.	REVISION DESCRIPTION	BY	DATE

PLAN & PROFILE SHEET
US 90

US 90 (FUTURE I-49) LA 318 INTERCHANGE

Stantec

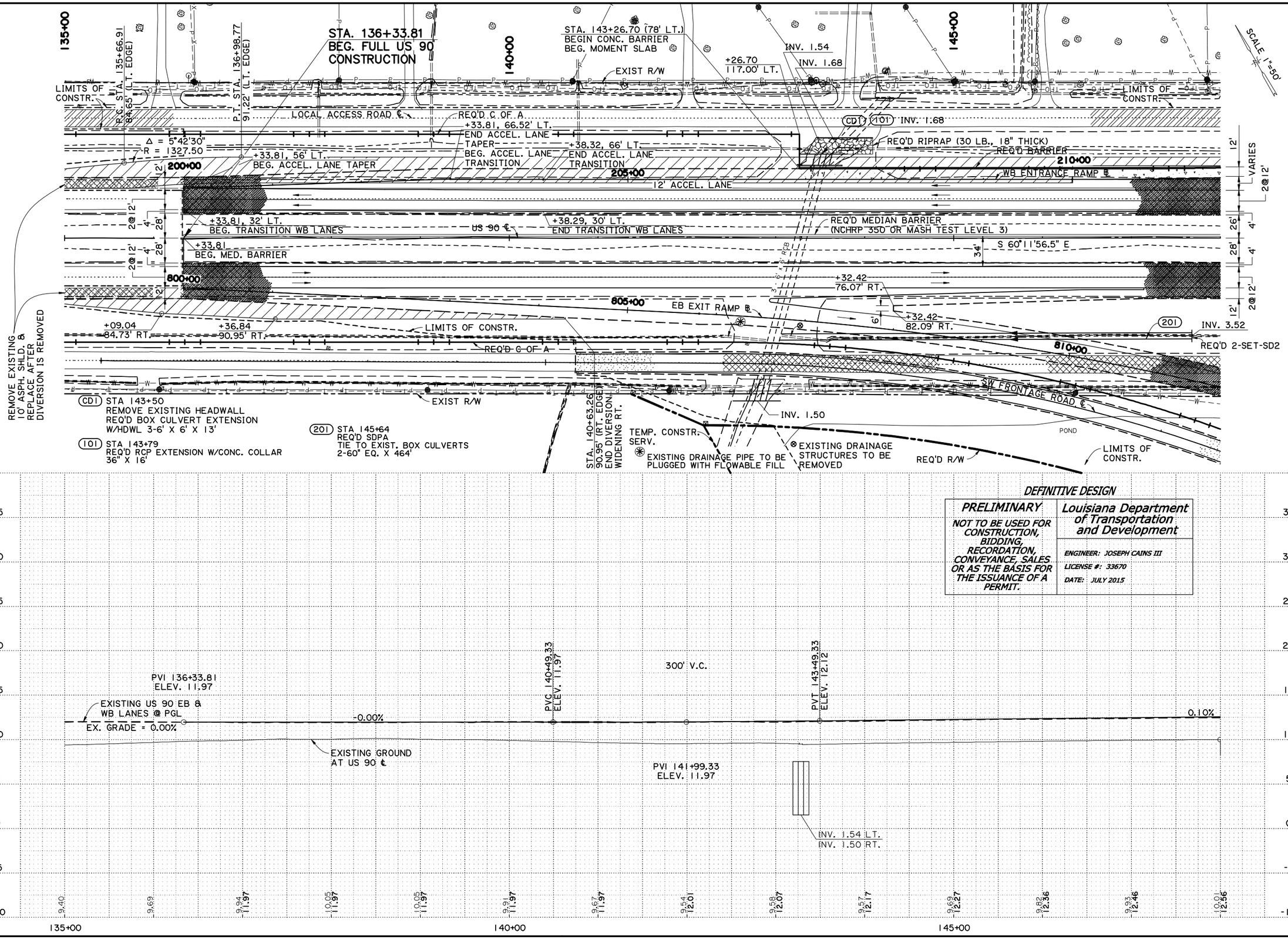

SHEET NUMBER B-11

PARISH ST. MARY | CONTROL SECTION 424-05 | STATE PROJECT H.004932

DESIGNED JC
CHECKED CMH
DETAILED TW
CHECKED JC
SERIES NUMBER

DEFINITIVE DESIGN
DATE: 7/1/2015

NO. | REVISION DESCRIPTION | BY | DATE

PLAN & PROFILE SHEET
US 90

US 90 (FUTURE I-49) LA 318 INTERCHANGE

Stantec

SCALE 1"=50'

150+00 | 155+00 | 160+00

STA. 150+70.24 92.09' LT. (LT. EDGE) END DIVERSION WIDENING LT.

EXIST R/W

LIMITS OF CONSTR.

REQ'D 4" INCIDENTAL CONC. PAVING

STA. 156+60.00 BEGIN WB APPROACH SLAB

STA. 157+00.00 BEGIN WB BRIDGE

LOCAL ACCESS RD. ℄

+69.36 BEG. RT. CONC. BARRIER & MOMENT SLAB

INV. 8.75

REQ'D CONC. BARRIER

220+00

REQ'D C OF A

215+00

WB ENTRANCE RAMP ℄

103

102

REQ'D CONC. BARRIER

2@12' VARIES | VARIES

4' | 26' | 4' | 28' | 2@12' | 12'

1.5' | 12' | 2@12' | 1.5' | 24' | 6' | 1.5' | 26' | 6' | 1.5' | 12' | 2@12'

S 60°11'56.5" E

REQ'D MEDIAN BARRIER (NCHRP 350 OR MASH TEST LEVEL 3)

US 90 ℄

34'

+90.00 END MED. BARRIER

GRADE TO DRAIN

REQ'D GUARD RAIL & EMBANKMENT (SEE GR-200)

UNDERGROUND TRAFFIC SIGNAL POWER

REQ'D GUARD RAIL & EMBANKMENT WIDENING (SEE GR-200)

STA. 156+50.00 BEGIN EB APPROACH SLAB

STA. 156+90.00 BEGIN EB BRIDGE

LIMITS OF CONSTR.

LIMITS OF CONSTR.

EXIST R/W

EB EXIT RAMP ℄

815+00

REQ'D C OF A

POND

(103) STA 154+05 REQ'D SDPA 18" EQ. X 42'

(102) STA 154+05 REQ'D CB-01 (70' LT.) TOP = 12.85 INV. = 8.79

⊗ EXISTING DRAINAGE STRUCTURES TO BE REMOVED

DEFINITIVE DESIGN

PRELIMINARY	Louisiana Department of Transportation and Development
NOT TO BE USED FOR CONSTRUCTION, BIDDING, RECORDATION, CONVEYANCE, SALES OR AS THE BASIS FOR THE ISSUANCE OF A PERMIT.	ENGINEER: JOSEPH CAINS III LICENSE #: 33670 DATE: JULY 2015

PROFILE NOTE:
US 90 WB BRIDGE SHOWN IN PROFILE ONLY. US 90 EB BRIDGE FOLLOWS THE SAME PROFILE GRADE.

530' V.C.

STA. 156+50.00 BEGIN EB APPROACH SLAB

STA. 156+60.00 BEGIN WB APPROACH SLAB

STA. 156+90.00 BEGIN EB BRIDGE

STA. 157+00.00 BEGIN WB BRIDGE

PVT 157+37.43 ELEV. 21.17

3.00%

PVC 157+90.62 ELEV. 22.77

PVC 152+07.43 ELEV. 12.96

0.10%

D.G. MED. 3.22%

D.G. MED. 0.10%

EXISTING US 90 EB & WB LANES @ PGL

EXISTING GROUND AT US 90 ℄

PVI 154+72.43 ELEV. 13.22

WB RAMP PROFILE @ PGL

BEG. D.G. MEDIAN 148+00.00 ELEV. 10.00

P.I. D.G. MEDIAN 154+05.00 ELEV. 10.60

BEG. D.G. MEDIAN 155+00.00 ELEV. 13.66

10.01 12.56 | 10.24 12.66 | 10.52 12.76 | 10.84 12.86 | 11.01 12.95 | 10.93 13.29 | 10.83 14.17 | 10.75 15.59 | 10.60 17.57 | 10.55 20.09 | 10.41 23.05 | 10.32 25.84 | 10.27 28.28 | 10.30 30.36

35 30 25 20 15 10 5 0 -5 -10

150+00 | 155+00 | 160+00

SHEET NUMBER B-12

PARISH ST. MARY | CONTROL SECTION 424-05 | STATE PROJECT H.004932

DESIGNED JC CHECKED CMH | DETAILED TW CHECKED JC | SERIES NUMBER

DEFINITIVE DESIGN DATE: 7/1/2015

NO. | DATE | REVISION DESCRIPTION | BY

PLAN & PROFILE SHEET US 90

US 90 (FUTURE I-49) LA 318 INTERCHANGE

Stantec

104 STA. 164+70
REQ'D SDPA
24' EQ. X 261'

EXIST R/W

STA. 464+57.68
END COLD PLANE &
OVERLAY LOCAL
ACCESS ROAD

EXIST R/W

LIMITS OF CONSTR.

+40.00
108.29' LT.
INV. 7.75
104

225+00

230+00

321

235+00

REQ'D BARRIER

REQ'D C OF A

WB ENTRANCE RAMP ℄

322

323

324

CD5

WB EXIT RAMP ℄

REQ'D BARRIER

2@12' 12' 1.5' 1.5' 6' 24' 6' 26' 1.5' 1.5' 2@12' 12'

GRADE TO DRAIN

US 90 ℄

STA. 166+26.18 US 90 ℄ =
STA. 331+12.87 LA 318 ℄

S 60°11'56.5" E

GRADE TO DRAIN

+08.28, INV. 5.66
TIE TO
EXIST. DITCH

REQ'D DITCH

INV. 5.80

LIMITS OF CONSTR.

EXIST. R/W

INV. 6.00

+26.92'
124.99' RT.
INV. 6.25

REQ'D DITCH

+19.09, INV. 7.70
TIE TO
EXIST. DITCH

NOTE:
SEE SHEET B-27 FOR
CUL-DE-SAC GEOMETRY

DRAINAGE INFORMATION
FOR STR. 104, 321-324, & CD5
CAN BE FOUND ON SHEET B-18

EXIST. R/W

173+20.73
INV. 8.40
TIE TO EXIST.
DITCH

REQ'D DITCH

LIMITS OF CONSTR.

⊗ EXISTING DRAINAGE
STRUCTURES TO BE
REMOVED

EXIST. R/W & REQ'D C OF A

EXIST. R/W & REQ'D C OF A

SCALE 1"=50'

PROFILE NOTE:
US 90 WB BRIDGE SHOWN IN
PROFILE ONLY. US 90 EB
BRIDGE FOLLOWS THE SAME
PROFILE GRADE.

PVI 166+40.62
ELEV. 48.27

3.00%

-3.00%

16.5' MIN.
CLR.

1700' V.C.

REQ'D
54" CONC.
BARRIER
(PIER PROT.)

EXISTING US 90
EB & WB LANES
@ PGL

F.L. 7.70

EXISTING GROUND
AT US 90 ℄

F.L. 7.63

WB RAMP PROFILE

P.I. D.G. RT. 173+20.73
ELEV. 8.40
BEG. RT. D.G.

D.G. RT. 0.10%

45 40 35 30 25 20 15 10 5 0

10.30 30.36 | 10.41 32.09 | 10.45 33.47 | 10.46 34.50 | 11.36 35.17 | 12.65 35.49 | 11.85 35.46 | 9.84 35.07 | 10.63 34.33 | 10.81 33.24 | 10.97 31.79 | 11.04 30.00 | 11.15 27.84 | 11.39 25.34

165+00

170+00

DEFINITIVE DESIGN

PRELIMINARY	*Louisiana Department of Transportation and Development*
NOT TO BE USED FOR CONSTRUCTION, BIDDING, RECORDATION, CONVEYANCE, SALES OR AS THE BASIS FOR THE ISSUANCE OF A PERMIT.	*ENGINEER: JOSEPH CAINS III* *LICENSE #: 33670* *DATE: JULY 2015*

SHEET NUMBER B-13

PARISH ST. MARY | CONTROL SECTION 424-05, 239-31 | STATE PROJECT H.004932

DESIGNED JC CHECKED CMH | DETAILED TW CHECKED JC | SERIES NUMBER

DEFINITIVE DESIGN
DATE: 7/1/2015

NO. | DATE | REVISION DESCRIPTION | BY

PLAN & PROFILE SHEET
US 90

US 90 (FUTURE I-49) LA 318 INTERCHANGE

Stantec

EXISTING DRAINAGE STRUCTURES TO BE REMOVED

EXISTING DRAINAGE STRUCTURE TO BE PARTIALLY REMOVED

175+00 | 180+00 | 185+00

STA. 175+87.00 END WB BRIDGE

STA. 176+27.00 END WB APPROACH SLAB

EXIST. R/W & REQ'D ℄ OF A

REQ'D R/W

REQ'D 4" INCIDENTAL CONC. PAVING

LIMITS OF CONSTR.

REQ'D ℄ OF A

NE FRONTAGE RD. ℄

STA. 182+24.85 END MOMENT SLAB & CONC. BARRIER

+27.37 124.56 LT.

REQ'D IMPACT ATTENUATOR

S 58°23'34.8" E

240+00 | 245+00 | 250+00

WB EXIT RAMP ℄

REQ'D CONC. BARRIER

SCALE 1"=50'

2@12' 12' | 6' 24' | 6' 26' | 2@12' 12'

10' VARIES 2@12' | 4' 26' | 4' 28' | 3@12' 12' | 102'

REQ'D GUARD RAIL & EMBANKMENT WIDENING (SEE GR-200)

TOP ELEV.= 9.83'
INV. ELEV.= 7.63'

US 90 ℄

S 60°11'56.5" E

+87.00 BEG. MED. BARRIER

REQ'D MEDIAN BARRIER (NCHRP 350 OR MASH TEST LEVEL 3)

950+00

REQ'D DITCH

+27.00 145.00' RT. INV. 8.61

STA. 175+77.00 END EB BRIDGE

STA. 176+17.00 END EB APPROACH SLAB

(105) STA 178+93 INV. 9.41
REQ'D RCPA EXTENSION W/ CONC. COLLAR 18" X 12'

LIMITS OF CONSTR.

845+00

EB ENTRANCE RAMP ℄

LIMITS OF CONSTR.

REQ'D ℄ OF A

Δ = 4°56'30"
R = 1299.50'

P.C. STA. 183+73.58
95.83' RT. (RT. EDGE)
BEG. DIVERSION WIDENING RT.

P.T. STA. 184+85.52
91.00' (RT. EDGE)

+34.77 80.00' RT.

+23.96 102.00' RT.

725+00

+69.30 187.17' RT.

REQ'D R/W

LIMITS OF CONSTR.

SE FRONTAGE RD. ℄

LIMITS OF CONSTR.

REQ'D R/W ℄ C OF A

+06.50 258.38' RT.

REQ'D R/W

PROFILE NOTE:
US 90 WB BRIDGE SHOWN IN PROFILE ONLY. US 90 EB BRIDGE FOLLOWS THE SAME PROFILE GRADE.

570' V.C.

STA. 175+77.00 END EB BRIDGE

STA. 175+87.00 END WB BRIDGE

STA. 176+17.00 END EB APPROACH SLAB

STA. 176+27.00 END WB APPROACH SLAB

PVC 174+96.91 ELEV. 22.52 0.00%

PVT 174+90.62 ELEV. 22.77

EXISTING US 90 EB & WB LANES @ PGL

P.I. D.G. MEDIAN 178+92.00 ELEV. 11.50

EXISTING GROUND AT US 90 ℄

PVT 180+68.91 ELEV. 14.33

0.13%

D.G. MED. 0.19%

EXISTING GROUND AT US 90 ℄

WB RAMP PROFILE

D.G. RT. 0.10%

D.G. RT. 0.16%

PVI 177+83.91 ELEV. 13.97

D.G. RT. 0.30%

F.L. 9.40

P.I. D.G. RT. 175+27.00 ELEV. 8.61

P.I. D.G. RT. 178+93.00 ELEV. 9.20

P.I. D.G. RT. 181+00.00 ELEV. 9.82

35 30 25 20 15 10 5 0 -5 -10

11.38 25.34 | 11.45 22.48 | 11.64 19.77 | 11.84 17.60 | 11.98 15.97 | 11.93 14.83 | 12.09 14.37 | 12.31 14.37 | 12.52 14.50 | 12.68 14.65 | 12.98 14.76 | 13.05 14.88 | 13.22 14.01 | 13.36 13.14

175+00 | 180+00 | 185+00

DEFINITIVE DESIGN

PRELIMINARY	Louisiana Department of Transportation and Development
NOT TO BE USED FOR CONSTRUCTION, BIDDING, RECORDATION, CONVEYANCE, SALES OR AS THE BASIS FOR THE ISSUANCE OF A PERMIT.	ENGINEER: JOSEPH CAINS III LICENSE #: 33670 DATE: JULY 2015

DEFINITIVE DESIGN
DATE: 7/1/2015

PLAN & PROFILE SHEET
US 90

US 90 (FUTURE I-49) LA 318 INTERCHANGE

SHEET NUMBER	B-14
PARISH	ST. MARY
CONTROL SECTION	424-05
STATE PROJECT	H.004932
DESIGNED JC CHECKED CMH	
DETAILED TW CHECKED JC	
SERIES NUMBER	

NO. | DATE | REVISION DESCRIPTION | BY

Stantec

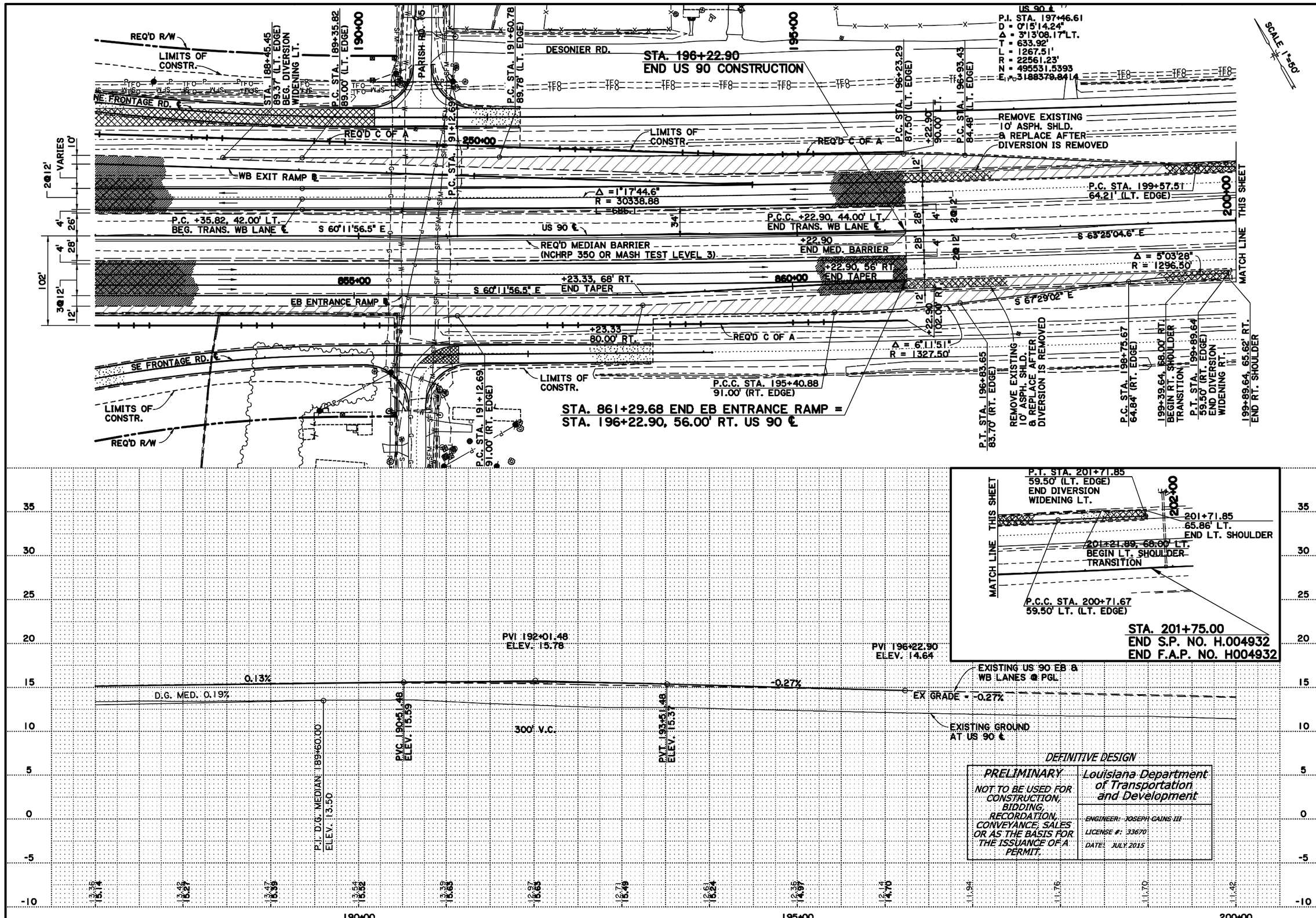

DEFINITIVE DESIGN

PRELIMINARY	Louisiana Department of Transportation and Development
NOT TO BE USED FOR CONSTRUCTION, BIDDING, RECORDATION, CONVEYANCE, SALES OR AS THE BASIS FOR THE ISSUANCE OF A PERMIT.	ENGINEER: JOSEPH CAINS III LICENSE #: 33670 DATE: JULY 2015

SHEET NUMBER B-15

PARISH ST. MARY
CONTROL SECTION 424-05
STATE PROJECT H.004932

DESIGNED JC
CHECKED CMH
DETAILED TW
CHECKED JC
SERIES NUMBER

DEFINITIVE DESIGN
DATE: 7/1/2015

NO. DATE REVISION DESCRIPTION BY

PLAN & PROFILE SHEET
US 90

US 90 (FUTURE I-49) LA 318 INTERCHANGE

Stantec

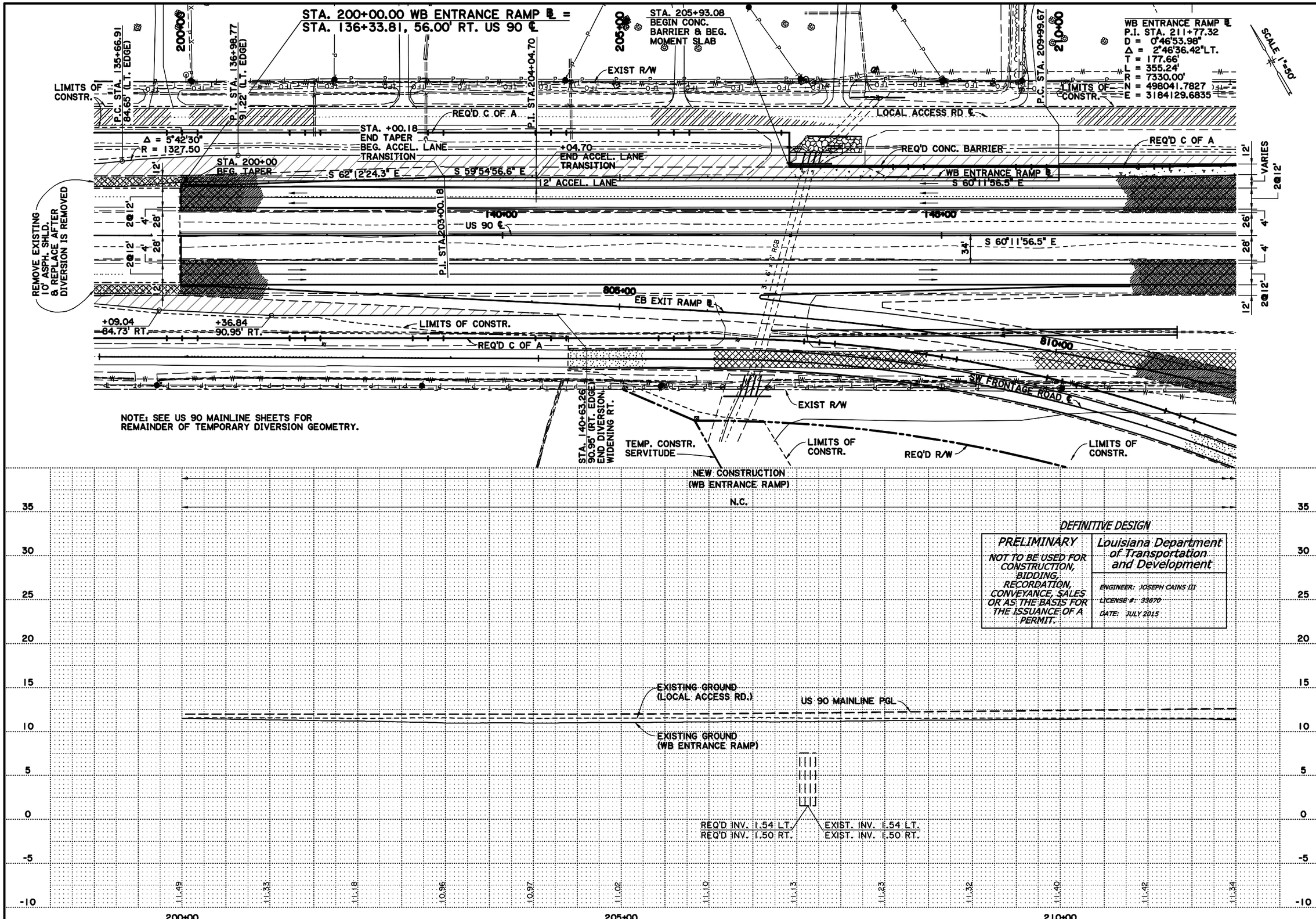

DEFINITIVE DESIGN

PRELIMINARY	Louisiana Department of Transportation and Development
NOT TO BE USED FOR CONSTRUCTION, BIDDING, RECORDATION, CONVEYANCE, SALES OR AS THE BASIS FOR THE ISSUANCE OF A PERMIT.	ENGINEER: JOSEPH CAINS III LICENSE #: 33670 DATE: JULY 2015

SHEET NUMBER B-16

PARISH ST. MARY
CONTROL SECTION 424-05
STATE PROJECT H.004932

DESIGNED JC
CHECKED CMH
DETAILED TW
CHECKED JC
SERIES NUMBER

DEFINITIVE DESIGN
DATE: 7/1/2015

NO. DATE REVISION DESCRIPTION BY

PLAN & PROFILE SHEET
US 90 WB RAMPS

US 90 (FUTURE I-49) LA 318 INTERCHANGE

Stantec

WB ENTRANCE RAMP ℄
P.I. STA. 211+77.32
D = 0°46'53.98"
Δ = 2°46'36.42"LT.
T = 177.66'
L = 355.24'
R = 7330.00'
N = 498041.7827
E = 3184129.6835

P.T. STA. 213+54.91

STA. 150+70.24
92.09' LT. (LT. EDGE)
END DIVERSION
WIDENING LT.

215+00

EXIST R/W

LIMITS OF CONSTR.

LOCAL ACCESS RD ℄

REQ'D 4" INCIDENTAL PAVING

220+00

225+00

SCALE 1"=50'

REQ'D C OF A

REQ'D CONC. BARRIER

S 62°58'32.9" E

WB ENTRANCE RAMP ℄

+35.12
BEG. RT. CONC.
BARRIER & RT.
MOMENT SLAB

S 58°47'34.7" E

2@12' VARIES 12'
4' 26'
4' 28'
2@12' 12'

150+00

155+00

160+00

US 90 ℄

P.C. STA. 217+04.94

P.T. STA. 223+01.02

LIMITS OF CONSTR.

EB EXIT RAMP ℄

815+00

REQ'D R/W & C OF A

EXIST R/W

⊗ EXISTING DRAINAGE STRUCTURES TO BE REMOVED

WB ENTRANCE RAMP ℄
P.I. STA. 220+03.11
D = 0°42'06.21"
Δ = 4°10'58.13"RT.
T = 298.17'
L = 596.08'
R = 8165.00'
N = 497666.5403
E = 3184865.3699

NEW CONSTRUCTION
(WB ENTRANCE RAMP)

US 90 MAINLINE PGL

PVI 218+85.18
ELEV. 14.11

PVC 220+48.00
ELEV. 12.75

PVT 223+48.00
ELEV. 11.50

PVC 223+78.08
ELEV. 11.50

300' V.C.

0.98%

-0.83%

-0.00%

EXISTING GROUND
(LOCAL ACCESS RD.)

EXISTING GROUND
(WB ENTRANCE RAMP)

PVC 217+35.18
ELEV. 12.64

PVT 220+35.18
ELEV. 12.86

PVI 221+98.00
ELEV. 11.50

300' V.C.

35 30 25 20 15 10 5 0 -5 -10

11.34 10.92 10.36 9.81 9.15 8.46 8.14 13.15 7.86 13.43 7.96 13.11 7.91 12.36 7.72 11.80 7.90 11.53 8.15 11.50 8.41 11.55

215+00 220+00 225+00

DEFINITIVE DESIGN

PRELIMINARY	Louisiana Department of Transportation and Development
NOT TO BE USED FOR CONSTRUCTION, BIDDING, RECORDATION, CONVEYANCE, SALES OR AS THE BASIS FOR THE ISSUANCE OF A PERMIT.	ENGINEER: JOSEPH CAINS III LICENSE #: 33670 DATE: JULY 2015

DEFINITIVE DESIGN
DATE: 7/1/2015

NO. | DATE | REVISION DESCRIPTION | BY

DESIGNED JC
CHECKED CMH
DETAILED TW
CHECKED JC
SERIES NUMBER

PARISH ST. MARY
CONTROL SECTION 424-05
STATE PROJECT H.004932

SHEET NUMBER B-17

PLAN & PROFILE SHEET
US 90 WB RAMPS

US 90 (FUTURE I-49) LA 318 INTERCHANGE

Stantec

WB ENTRANCE RAMP ℄
P.I. STA. 226+51.02
D = 0°42'10.86"
Δ = 1°24'21.71 "LT.
T = 100.01'
L = 200.00'
R = 8150.00'
N = 497330.6998
E = 3185419.7552

STA. 230+06.59 WB RAMP ℄ =
STA. 332+03.93 LA 318 ℄

WB EXIT RAMP ℄
P.I. STA. 233+64.90
D = 0°34'45.59"
Δ = 2°23'54.17" LT.
T = 207.03'
L = 413.99'
R = 9890.00'
N = 496975.9063
E = 3186039.2350

NOTES:
1. SEE SHEET B-27 FOR CUL-DE-SAC GEOMETRY

SCALE 1"=50'

225+00 | 230+00 | 235+00

EXIST R/W | LOCAL ACCESS RD. ℄ | P.C. STA. 225+51.02 | P.T. STA. 227+51.02 | N 38°175.8' E | P.C. STA. 231+57.87 | R.T. STA. 235+71.86 | EXIST. R/W & REQ'D C OF A

REQ'D SET-SD2 | LIMITS OF CONSTR. | +07.10 | 18.07' LT. | INV. 7.75 | REQ'D CONC. BARRIER | REQ'D C OF A | WB ENTRANCE RAMP ℄ | S 60°11'56.5" E | WB EXIT RAMP ℄ | S 62°35'50.6"E | REQ'D BARRIER

10' | 1.5' | 15' | 6' | 1.5'

165+00 | 170+00

US 90 ℄ | +61.67 END RT. CONC. BARRIER & MOMENT SLAB | +60.09 BEGIN RT. CONC. BARRIER & MOMENT SLAB | P.C. STA. 236+21.86 | S 60°11'56.5" E

18" RCP

LIMITS OF CONSTR. | EXIST. R/W

(104) STA 164+70
REQ'D SDPA
24" EQ. X 261'

(321) STA 332+17.40
REQ'D CB-01 (39.78' LT.)
TOP: 10.75, INV.: 6.67

(322) STA 332+23.33
REQ'D SDPA
24" EQUIV. X 88'

(323) STA 332+35
REQ'D CB-01 (48.32' RT.)
TOP: 10.75, INV.: 6.58

(324) STA 332+38
REQ'D SDP
24" x 75'

(CD5) STA 332+40
REQ'D CDPA WITH HEADWALLS
4-36" EQUIV. X 104'

LIMITS OF CONSTR.

⊗ EXISTING DRAINAGE STRUCTURES TO BE REMOVED

WB EXIT RAMP ℄
P.I. STA. 239+85.45
D = 0°34'42.43"
Δ = 4°12'15.9" RT.
T = 363.58'
L = 726.84'
R = 9905.00'
N = 496690.2779
E = 3186590.2067

NEW CONSTRUCTION (WB ENTRANCE RAMP) | NEW CONSTRUCTION (WB EXIT RAMP) | N.C. | US 90 MAINLINE PGL

300' V.C. | PVI 225+28.08 ELEV. 11.50 | PVI 228+28.08 ELEV. 12.09 | PVI 231+80.63 ELEV. 12.09 | PVI 234+80.63 ELEV. 11.50

BEG. D.G. LT. 227+15.00 ELEV. 10.60 | END D.G. LT. 228+97.00 ELEV. 10.78 | PVT 229+78.08 ELEV. 12.09 | PVC 230+30.63 ELEV. 12.09 | PVT 236+30.63 ELEV. 11.50

0.20% | -0.00% | -0.20% | 0.00% | D.G. LT. 0.10%

(321) 24" X 88' SDPA @ 0.1% | (323) 24" X 75' SDPA @ 0.1% | (104) 24" X 261' SDPA @ 0.47% | (322) | (CD5) | (324)

INV. 7.75 | INV. 6.67 | INV. 6.58 | INV. 6.03 | INV. LT. 6.55 | INV. LT. 6.03 | BEG. D.G. LT. 231+25.00 ELEV. 6.55

8.41 11.55 | 8.58 11.66 | 8.79 11.84 | 8.58 11.99 | 8.63 12.07 | 11.67 12.08 | 9.06 12.07 | 8.58 12.00 | 8.48 11.85 | 8.54 11.67 | 8.27 11.56 | 7.83 11.50 | 7.72 11.50 | 8.21 11.50

35 | 30 | 25 | 20 | 15 | 10 | 5 | 0 | -5 | -10

DEFINITIVE DESIGN
DATE: 7/1/2015

DESIGNED	JC
CHECKED	CMH
DETAILED	TW
CHECKED	JC

PARISH	ST. MARY
CONTROL SECTION	424-05, 239-31
STATE PROJECT	H.004932
SERIES NUMBER	

SHEET NUMBER B-18

REVISION DESCRIPTION | BY | DATE | NO.

PLAN & PROFILE SHEET
US 90 WB RAMPS

US 90 (FUTURE I-49) LA 318 INTERCHANGE

PRELIMINARY
NOT TO BE USED FOR CONSTRUCTION, BIDDING, RECORDATION, CONVEYANCE, SALES OR AS THE BASIS FOR THE ISSUANCE OF A PERMIT.

DEFINITIVE DESIGN

Louisiana Department of Transportation and Development

ENGINEER: JOSEPH CAINS III
LICENSE #: 33670
DATE: JULY 2015

Stantec

⊗EXISTING DRAINAGE STRUCTURES TO BE REMOVED

240+00 | 245+00 | 250+00

EXIST R/W & REQ'D C OF A

REQ'D 4" INCIDENTAL CONC. PAVING

REQ'D R/W

LIMITS OF CONSTR.

NE FRONTAGE RD. ℄

REQ'D C OF A

STA. 245+93.17
END RT. MOMENT SLAB & END CONC. BARRIER

REQ'D IMPACT ATTENUATOR

WB EXIT RAMP ℄

REQ'D CONC. BARRIER

S 56°23'34.8" E

1.5' 6' 1.5' 10'

10' VARIES 2@12' 4' 26' 4' 28' 3@12' 12'

175+00 | 180+00 | 185+00

US 90 ℄

P.T. STA. 243+48.70

34'

S 60°11'56.5" E

850+00

Δ = 4°56'30"
R = 1299.50'

+34.77
80.00' RT.

WB EXIT RAMP ℄
P.I. STA. 239+85.45
D = 0°34'42.43"
Δ = 4°12'15.85"RT.
T = 363.58'
L = 726.84'
R = 9905.00'
N = 496690.2779
E = 3186590.2067

LIMITS OF CONSTR.

845+00

EB ENTRANCE RAMP ℄

REQ'D R/W & C OF A

LIMITS OF CONSTR.

REQ'D R/W

P.C. STA. 183+73.58
95.83' RT. (RT. EDGE)
BEG. DIVERSION WIDENING RT.

P.T. STA. 184+85.52
91.00' (RT. EDGE)

SE FRONTAGE RD. ℄

LIMITS OF CONSTR.

REQ'D R/W

NEW CONSTRUCTION
(WB ENTRANCE RAMP)

N.C.

35 30 25 20 15 10 5 0 -5 -10

300' V.C.

PVC 239+41.79
ELEV. 11.50

PVT 242+41.73
ELEV. 12.23

PVI 243+93.31
ELEV. 12.97

PVI 245+93.31
ELEV. 13.23

EXISTING GROUND (N. FRONTAGE RD.)

0.00%

0.49%

0.13%

EXISTING GROUND (WB EXIT RAMP)

D.G. L.T. 0.10%

PVI 240+91.73
ELEV. 11.50

PVC 242+43.31
ELEV. 12.24

300' V.C.

PVT 245+43.31
ELEV. 13.16

D.G. L.T. 0.30%

P.I. D.G. L.T. 246+70.50
ELEV. 8.10

9.21 11.50 | 8.43 11.30 | 8.81 11.55 | 8.89 11.70 | 9.58 12.04 | 9.50 12.30 | 8.41 12.86 | 8.83 13.10 | 9.28 | 9.81 | 10.23 | 10.72 | 11.44 | 12.07

240+00 | 245+00 | 250+00

DEFINITIVE DESIGN

PRELIMINARY	*Louisiana Department of Transportation and Development*
NOT TO BE USED FOR CONSTRUCTION, BIDDING, RECORDATION, CONVEYANCE, SALES OR AS THE BASIS FOR THE ISSUANCE OF A PERMIT.	*ENGINEER: JOSEPH CAINS III* *LICENSE #: 33670* *DATE: JULY 2015*

SHEET NUMBER B-19

PARISH ST. MARY | CONTROL SECTION 424-05 | STATE PROJECT H.004932

DESIGNED JC CHECKED CMH | DETAILED TW CHECKED JC | SERIES NUMBER

DEFINITIVE DESIGN
DATE: 7/1/2015

NO. | DATE | REVISION DESCRIPTION | BY

PLAN & PROFILE SHEET US 90 WB RAMPS

US 90 (FUTURE I-49) LA 318 INTERCHANGE

Stantec

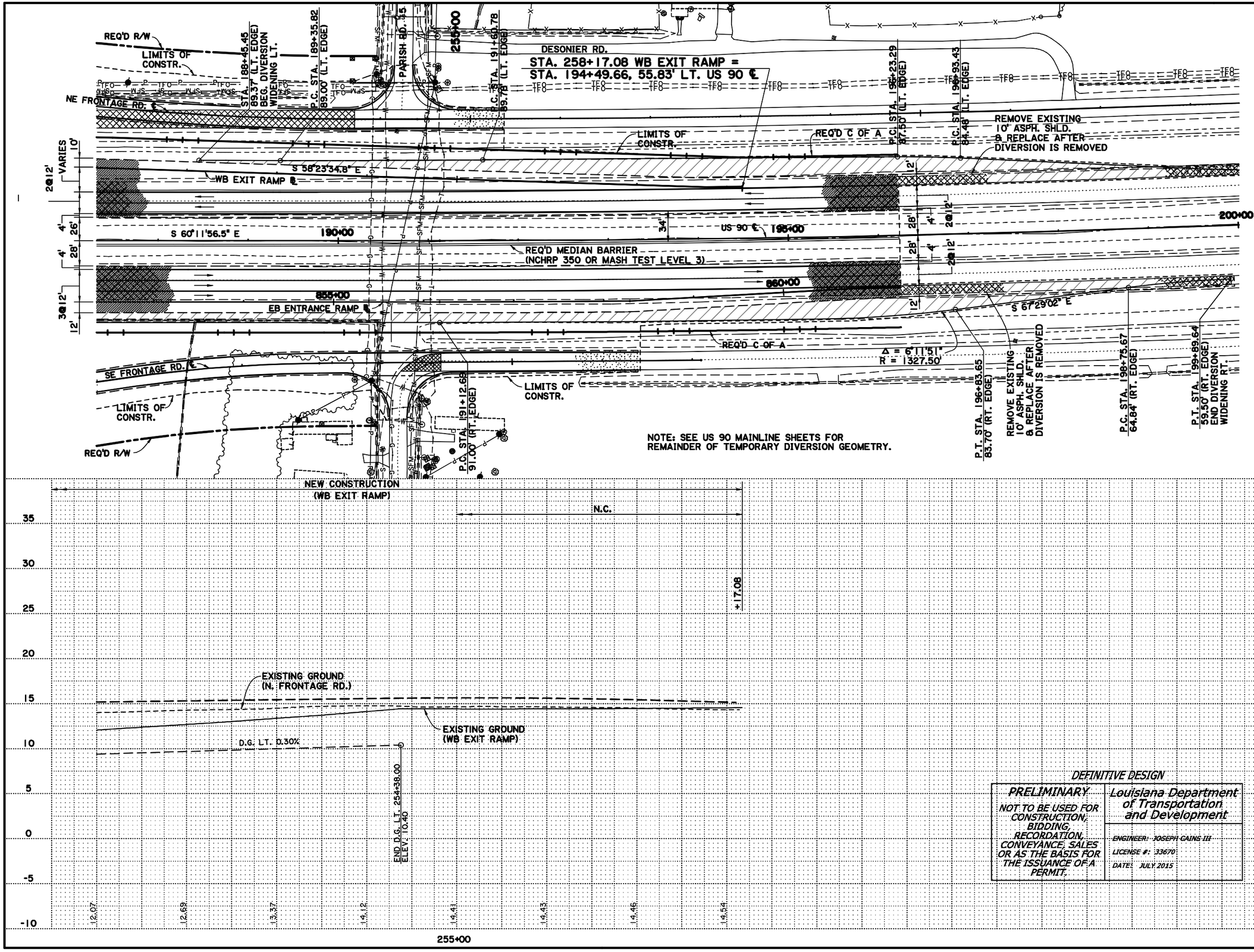

SCALE 1"=50'

DEFINITIVE DESIGN

PRELIMINARY	*Louisiana Department of Transportation and Development*
NOT TO BE USED FOR CONSTRUCTION, BIDDING, RECORDATION, CONVEYANCE, SALES OR AS THE BASIS FOR THE ISSUANCE OF A PERMIT.	*ENGINEER: JOSEPH GAINS III* *LICENSE #: 33670* *DATE: JULY 2015*

SHEET NUMBER B-20

PARISH	CONTROL SECTION	STATE PROJECT
ST. MARY	424-05	H.004932

DESIGNED / CHECKED
DETAILED / CHECKED
SERIES NUMBER

DEFINITIVE DESIGN
DATE: 7/1/2015

NO.	REVISION DESCRIPTION	BY	DATE

PLAN & PROFILE SHEET
US 90 WB RAMPS

US 90 (FUTURE I-49) LA 318 INTERCHANGE

Stantec

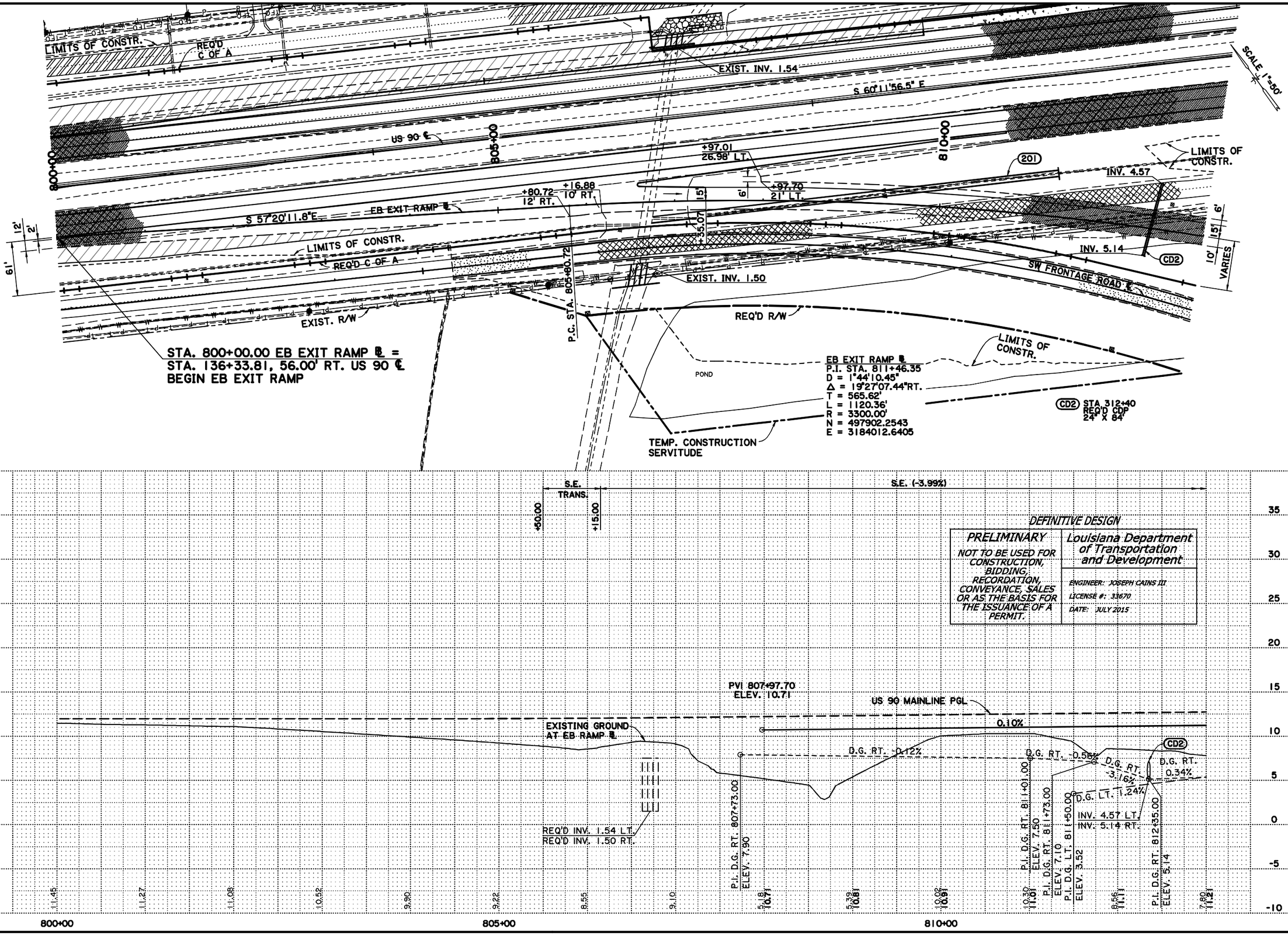

SHEET NUMBER B-21

PARISH	CONTROL SECTION	STATE PROJECT
ST. MARY	424-05	H.004932

DESIGNED JC
CHECKED CMH
DETAILED TW
CHECKED JC
SERIES NUMBER

DEFINITIVE DESIGN
DATE: 7/1/2015

NO.	DATE	REVISION DESCRIPTION	BY

PLAN & PROFILE SHEET US 90 EB RAMPS

US 90 (FUTURE I-49) LA 318 INTERCHANGE

Stantec

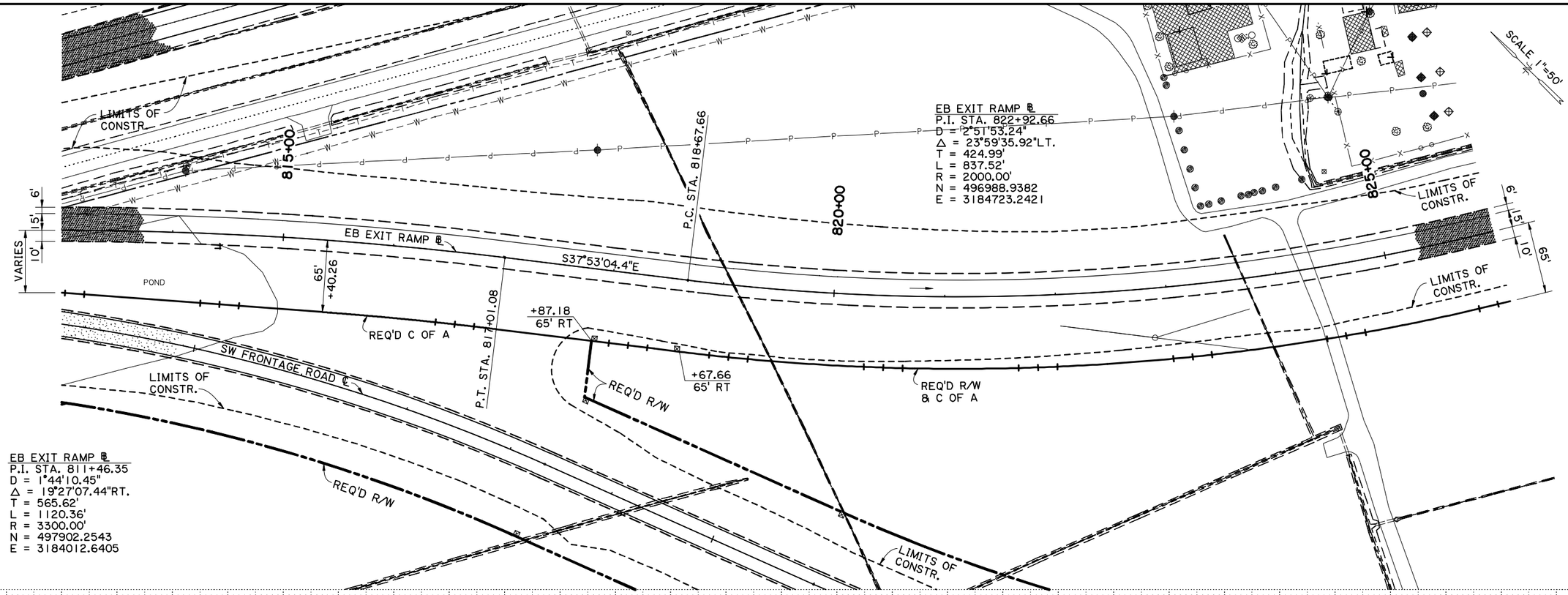

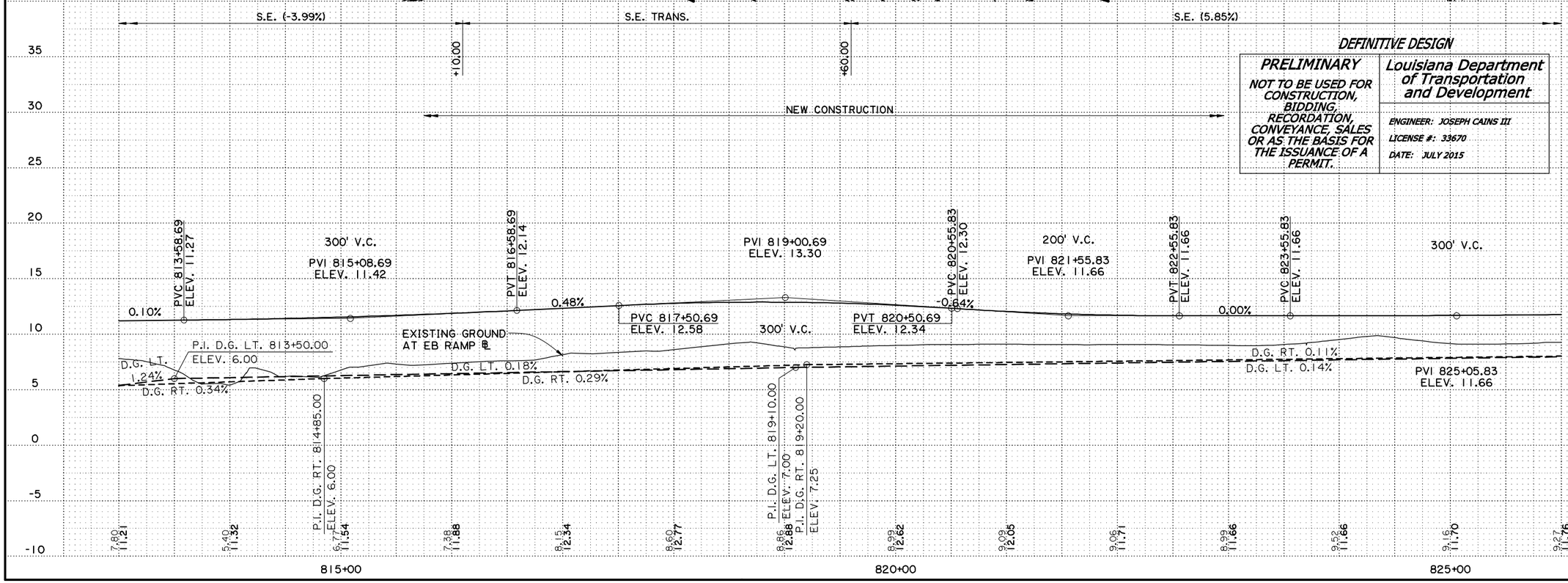

SHEET NUMBER B-22

PARISH	CONTROL SECTION	STATE PROJECT
ST. MARY	424-05	H.004932

DESIGNED	CHECKED	DETAILED	CHECKED	SERIES NUMBER
JC	CMH	TW	JC	

DEFINITIVE DESIGN
DATE: 7/1/2015

NO.	DATE	REVISION DESCRIPTION	BY

PLAN & PROFILE SHEET US 90 EB RAMPS

US 90 (FUTURE I-49) LA 318 INTERCHANGE

Stantec

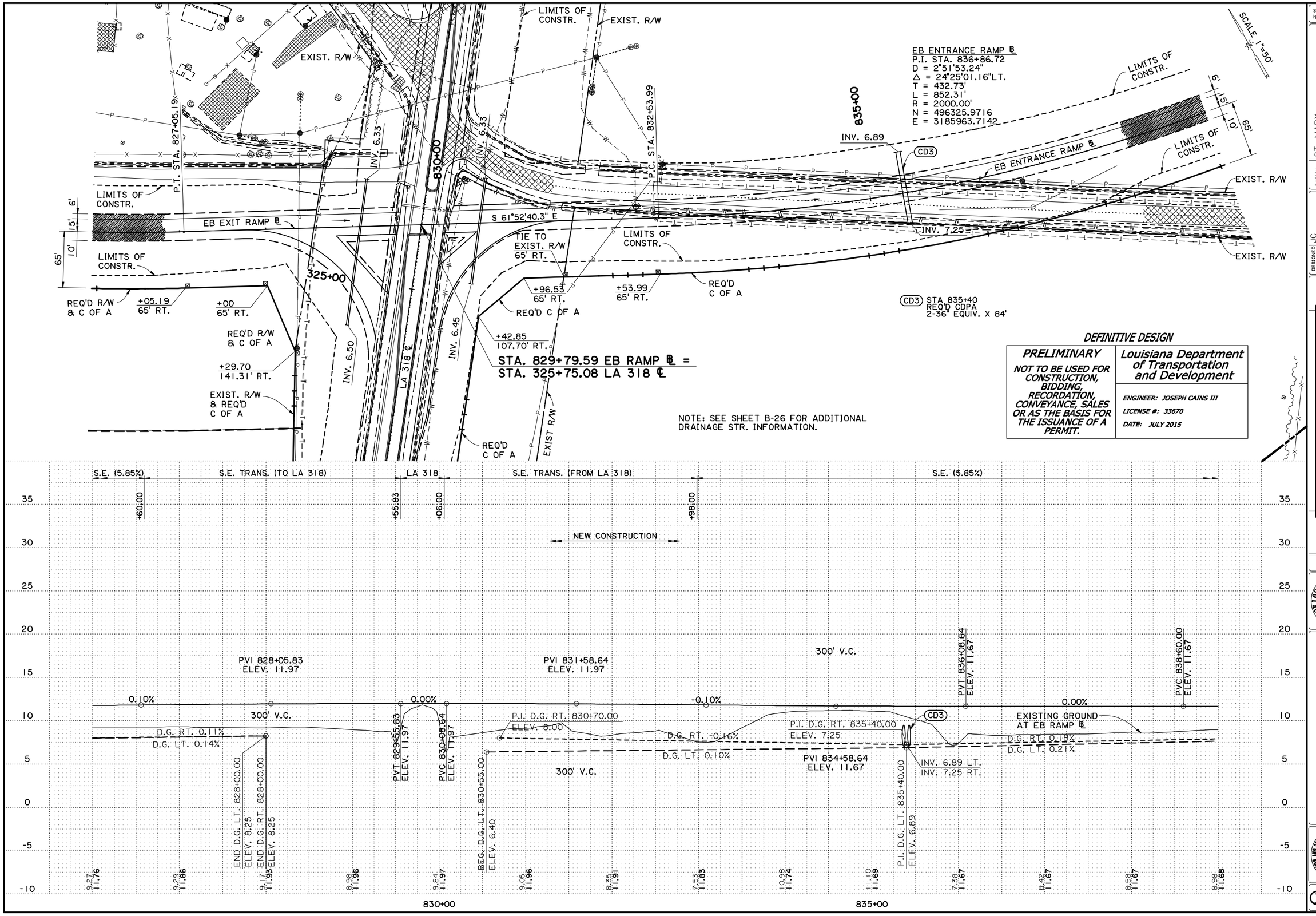

DEFINITIVE DESIGN

PRELIMINARY	*Louisiana Department of Transportation and Development*
NOT TO BE USED FOR CONSTRUCTION, BIDDING, RECORDATION, CONVEYANCE, SALES OR AS THE BASIS FOR THE ISSUANCE OF A PERMIT.	*ENGINEER: JOSEPH CAINS III* *LICENSE #: 33670* *DATE: JULY 2015*

SHEET NUMBER B-23

PARISH	CONTROL SECTION	STATE PROJECT
ST. MARY	424-05, 239-31	H.004932

DESIGNED JC
CHECKED CMH
DETAILED TW
CHECKED JC
SERIES NUMBER

DEFINITIVE DESIGN
DATE: 7/1/2015

NO.	DATE	REVISION DESCRIPTION	BY

PLAN & PROFILE SHEET US 90 EB RAMPS

US 90 (FUTURE I-49) LA 318 INTERCHANGE

Stantec

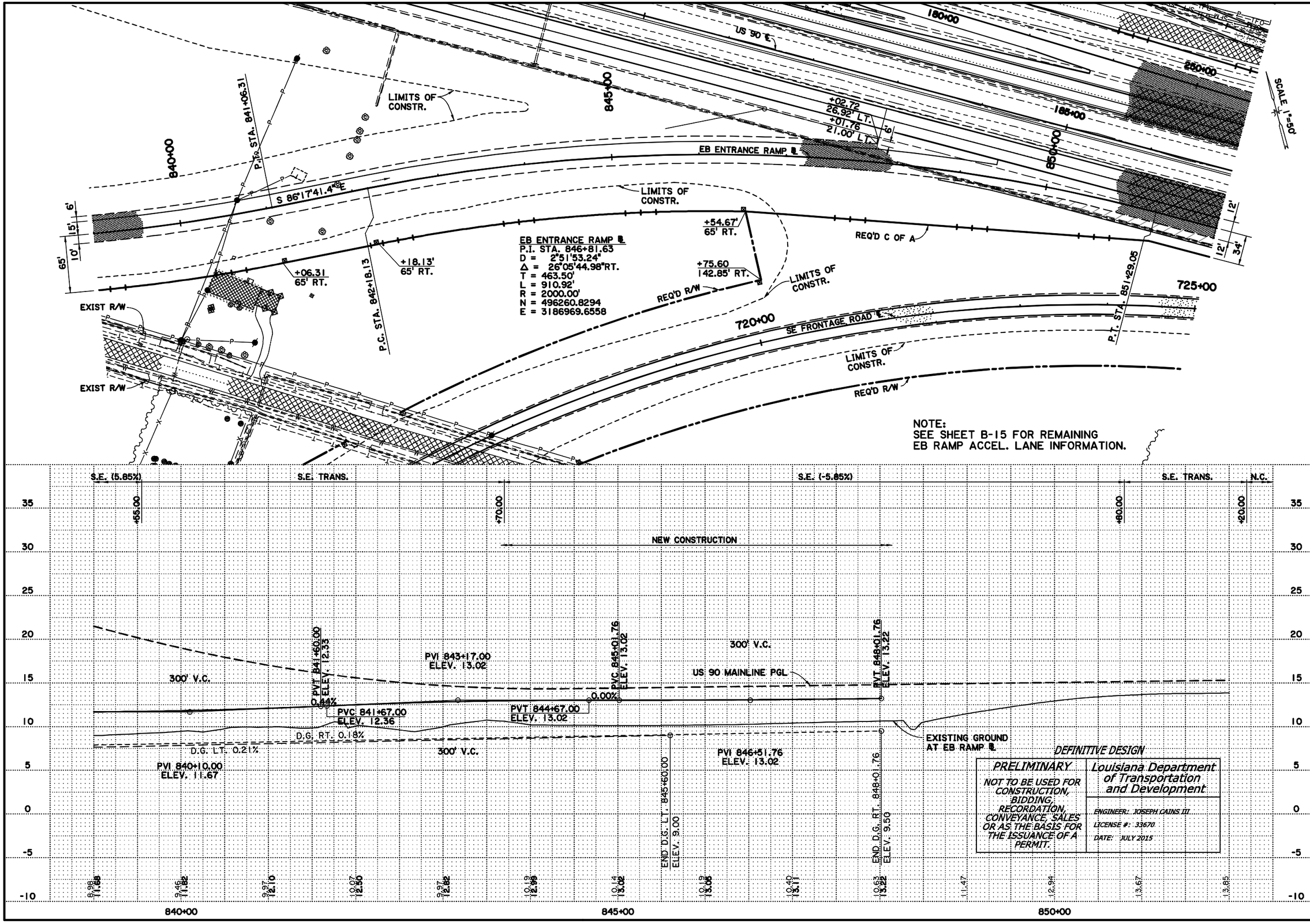

DEFINITIVE DESIGN

PRELIMINARY

NOT TO BE USED FOR CONSTRUCTION, BIDDING, RECORDATION, CONVEYANCE, SALES OR AS THE BASIS FOR THE ISSUANCE OF A PERMIT.

DEFINITIVE DESIGN

Louisiana Department of Transportation and Development

ENGINEER: JOSEPH CAINS III

LICENSE #: 33670

DATE: JULY 2015

PLAN & PROFILE SHEET
US 90 EB RAMPS

US 90 (FUTURE I-49) LA 318 INTERCHANGE

SHEET NUMBER	B-24
PARISH	ST. MARY
CONTROL SECTION	424-05
STATE PROJECT	H.004932
DESIGNED JC / CHECKED CMH	
DETAILED TW / CHECKED JC	
SERIES NUMBER	

DEFINITIVE DESIGN
DATE: 7/1/2015

NO.	REVISION DESCRIPTION	DATE	BY

Stantec

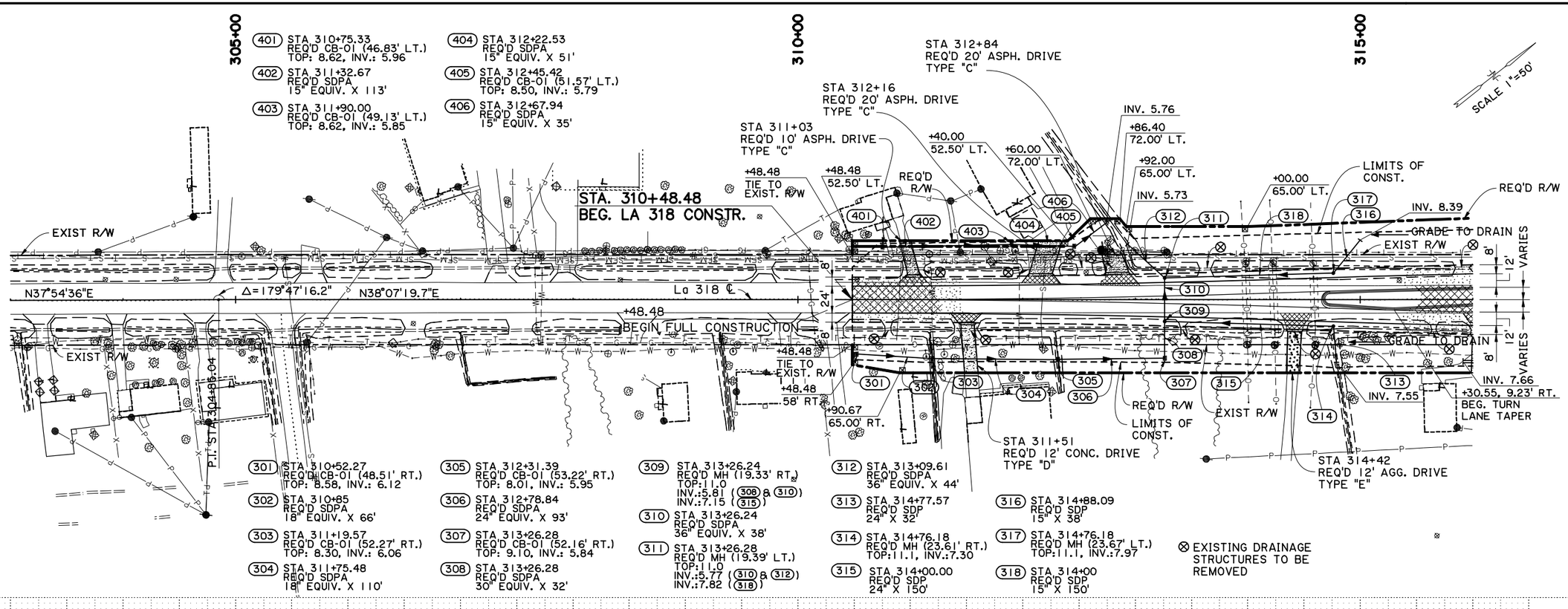

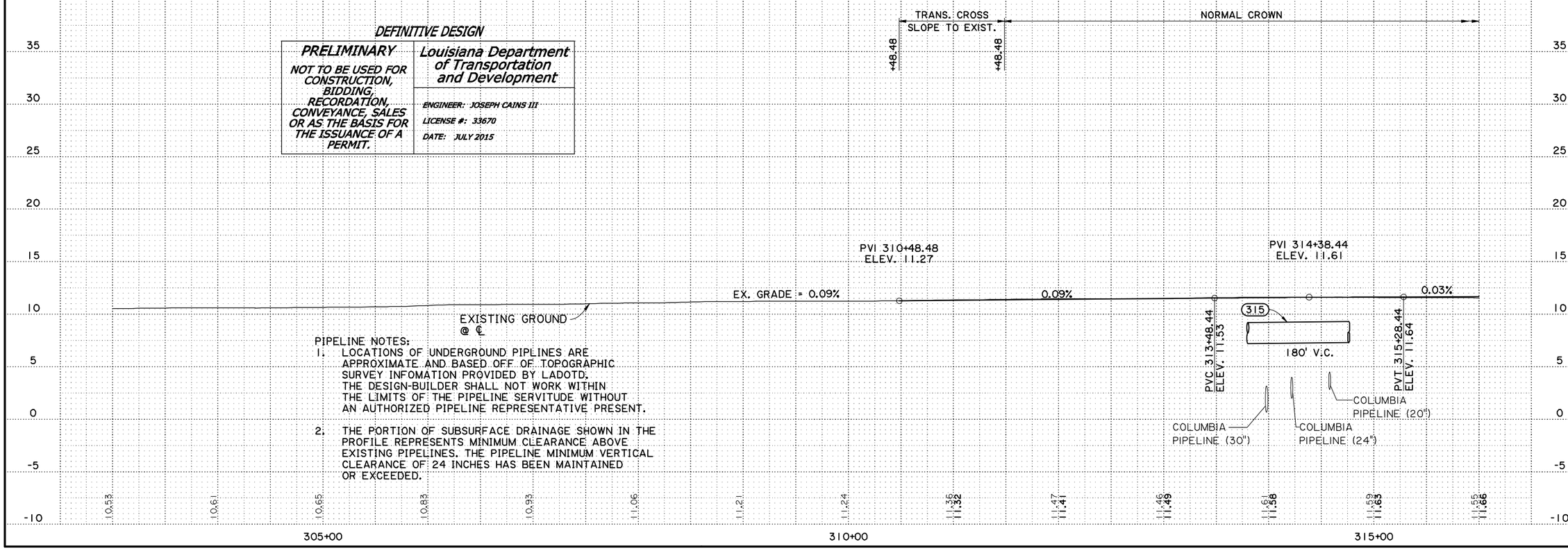

PIPELINE NOTES:

1. LOCATIONS OF UNDERGROUND PIPLINES ARE APPROXIMATE AND BASED OFF OF TOPOGRAPHIC SURVEY INFOMATION PROVIDED BY LADOTD. THE DESIGN-BUILDER SHALL NOT WORK WITHIN THE LIMITS OF THE PIPELINE SERVITUDE WITHOUT AN AUTHORIZED PIPELINE REPRESENTATIVE PRESENT.
2. THE PORTION OF SUBSURFACE DRAINAGE SHOWN IN THE PROFILE REPRESENTS MINIMUM CLEARANCE ABOVE EXISTING PIPELINES. THE PIPELINE MINIMUM VERTICAL CLEARANCE OF 24 INCHES HAS BEEN MAINTAINED OR EXCEEDED.

SHEET NUMBER B-25
PARISH ST. MARY
CONTROL SECTION 239-31
STATE PROJECT H.004932
DESIGNED JC
CHECKED CMH
DETAILED TW
CHECKED JC
SERIES NUMBER
NO. REVISION DESCRIPTION BY DATE

DEFINITIVE DESIGN
DATE: 7/1/2015

PLAN & PROFILE SHEET
LA 318
US 90 (FUTURE I-49) LA 318 INTERCHANGE

Stantec

(SD1) STA 316+08, 55' RT.
REQ'D SDA
18" EQUIV. X 32'

(SD2) STA 320+30
REQ'D SDA
30" EQUIV. X 78'

(SD3) STA 320+41
REQ'D SD
18" X 80'

(SD4) STA 325+35, 70' RT.
REQ'D SDA
36" EQUIV. X 124'

(SD5) STA 325+33, 66' LT
REQ'D SD
24" X 170'

320+00

SOUTH FRONTAGE ROAD

325+00

EB EXIT RAMP B

SCALE 1"=50'

STA 320+41.66
REQ'D SDP
18" X 102'

+91.81
TIE TO
EXIST. R/W

REQ'D R/W
+5.58
95.00' LT.

EXIST. R/W &
REQ'D C OF A

+79.88
165.57' LT.

REQ'D R/W
& C OF A

+9.88
123.08' LT.

LIMITS OF
CONST.

REQ'D R/W
& C OF A

INV. 6.88
68' LT.

INV. 6.50

INV. 6.33

EXIST R/W

LIMITS OF
CONST.

+00.00
80.00' LT.

REQ'D R/W

+65.58
80.00' LT.

LIMITS OF
CONST.

GRADE TO
DRAIN

EXIST R/W

GRADE TO
DRAIN

INV. 6.96
62' LT.

VARIES 12' 8'

VARIES 12' 8'

N38°07'19.7"E

La 318 ℄

+38.58, 14' LT.; END TURN LANE TAPER

+73.58, 2' LT.; BEG. TURN LANE TAPER

+95.55, 0.30' RT.; END TURN LANE TAPER

+64.58, 25.57' RT.; BEG. TURN LANE TAPER

830+00

8' 24' 4' 24' 8'

INV. 7.69

GRADE
TO DRAIN

GRADE TO
DRAIN

+64.58, 38' RT.
END TURN LANE TAPER

INV. 6.89
61.5' RT.

LIMITS OF
CONST.

INV. 6.45

INV. 6.33

+99.14, 14' RT.
BEG. TURN
LANE TAPER

+64.14, 2' RT.
END TURN LANE TAPER

(SD1)

REQ'D R/W

+80.00
65.00' RT.

LIMITS OF
CONST.

INV. 6.97
66.5' RT.

(SD2)

TIE TO EXIST. R/W
95.00' RT.

+5.58
81.00' RT.

REQ'D
C OF A

(SD4)

LIMITS OF CONST.

+80.00
81.00' RT.

+31.37
126.45' RT.

EB ENTRANCE RAMP B

+09.00
BEG. 6" INCIDENTAL
CONC. PAVING

EXIST R/W

STA 316+08
REQ'D 16' ASPH. DRIVE
TYPE "C"

STA 316+85
REQ'D 9' ASPH. DRIVE
TYPE "C"

EXIST R/W

+5.58
TIE TO EXIST. R/W

+65.58
TIE TO
EXIST. R/W

STA. 325+75.08 LA 318 ℄ =
STA. 829+79.59 EB RAMP B ℄

⊗EXISTING DRAINAGE
STRUCTURES TO BE
REMOVED

REQ'D R/W

REQ'D R/W

NORMAL CROWN

35 30 25 20 15 10 5 0 -5 -10

0.03%

EXISTING GROUND
@ ℄

P.I. D.G. RT. 318+20.00
ELEV. 7.25

P.I. D.G. LT. 317+80.00
ELEV. 7.00

P.I. D.G. LT. 324+50.00
ELEV. 7.00

D.G. RT. -0.10%

D.G. LT. -0.10%

PVC 328+76.54
ELEV. 12.06

BOARDWALK
PIPELINE (20")

BOARDWALK
PIPELINE (6")

BOARDWALK
PIPELINE (30")

11.55 11.66 11.52 11.70 11.56 11.73 11.43 11.76 11.40 11.79 11.54 11.82 11.55 11.85 11.55 11.88 11.59 11.91 11.63 11.95 11.82 11.98 11.92 12.01 11.97 12.04 12.01 12.07

320+00

325+00

DEFINITIVE DESIGN

PRELIMINARY	*Louisiana Department of Transportation and Development*
NOT TO BE USED FOR CONSTRUCTION, BIDDING, RECORDATION, CONVEYANCE, SALES OR AS THE BASIS FOR THE ISSUANCE OF A PERMIT.	*ENGINEER: JOSEPH CAINS III* *LICENSE #: 33670* *DATE: JULY 2015*

PIPELINE NOTE:
LOCATIONS OF UNDERGROUND PIPLINES ARE APPROXIMATE AND BASED OFF OF TOPOGRAPHIC SURVEY INFOMATION PROVIDED BY LADOTD. THE DESIGN-BUILDER SHALL NOT WORK WITHIN THE LIMITS OF THE PIPELINE SERVITUDE WITHOUT AN AUTHORIZED PIPELINE REPRESENTATIVE PRESENT.

SHEET NUMBER B-26

PARISH ST. MARY | CONTROL SECTION 424-05, 239-31 | STATE PROJECT H.004932

DESIGNED JC
CHECKED CMH
DETAILED TW
CHECKED JC
SERIES NUMBER

NO. REVISION DESCRIPTION BY DATE

DEFINITIVE DESIGN
DATE: 7/1/2015

PLAN & PROFILE SHEET
LA 318

US 90 (FUTURE I-49) LA 318 INTERCHANGE

Stantec

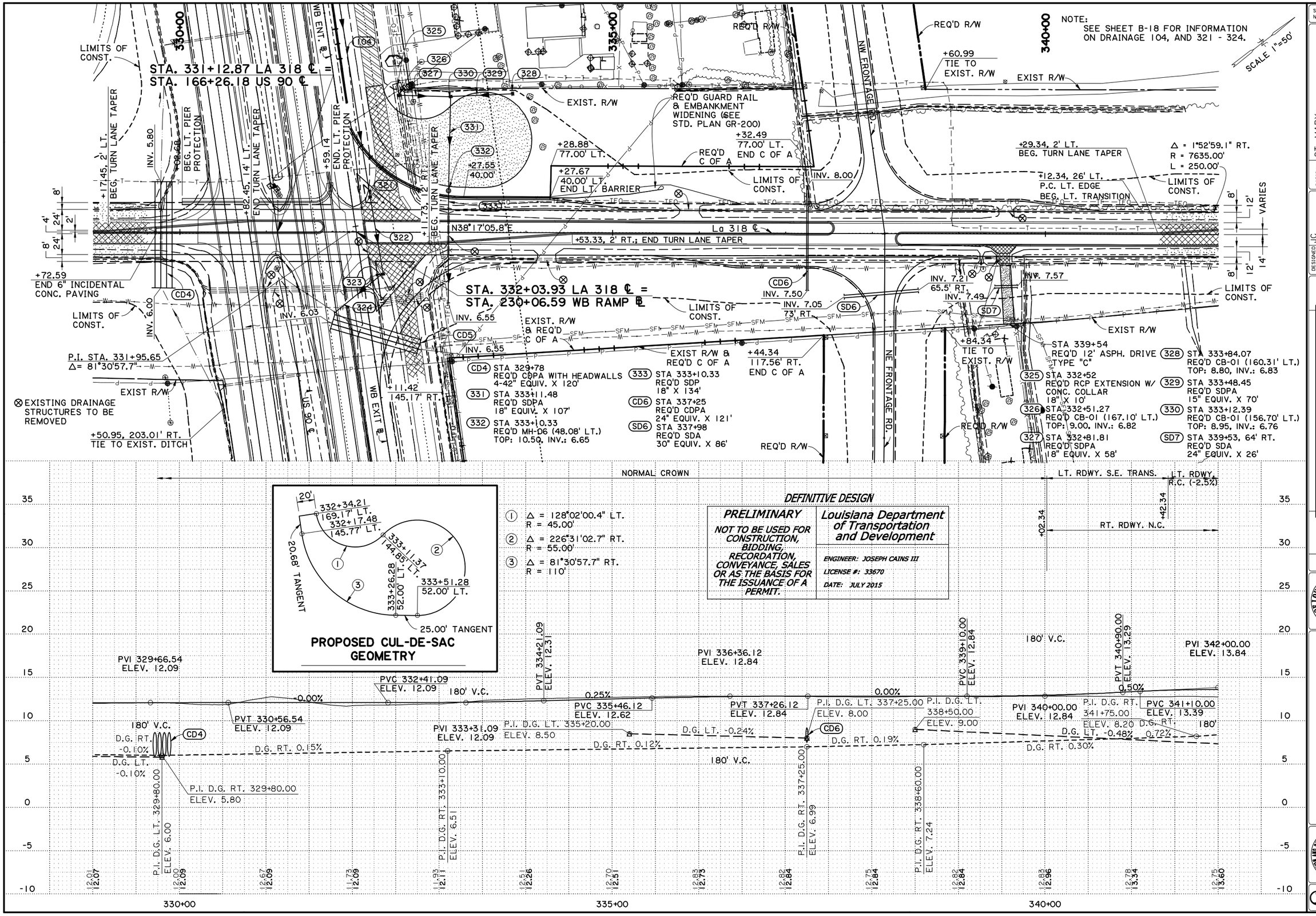

SHEET NUMBER B-27
PARISH ST. MARY
CONTROL SECTION 424-05, 239-31
STATE PROJECT H.004932
DESIGNED JC
CHECKED CMH
DETAILED TW
CHECKED JC
SERIES NUMBER
REVISION DESCRIPTION BY NO. DATE

DEFINITIVE DESIGN
DATE: 7/1/2015

PLAN & PROFILE SHEET
LA 318
US 90 (FUTURE I-49) LA 318 INTERCHANGE

Stantec

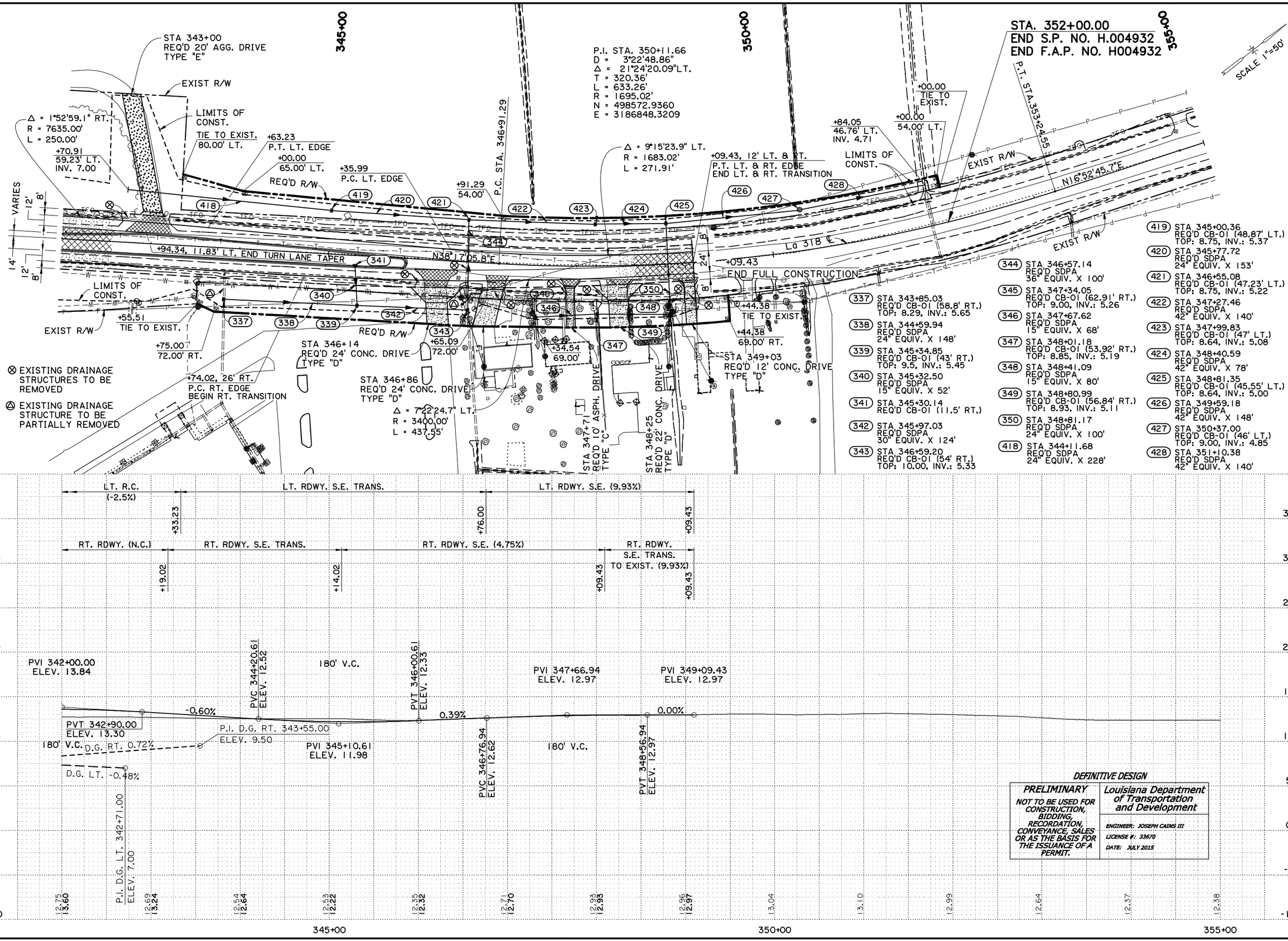

DEFINITIVE DESIGN

PRELIMINARY	Louisiana Department of Transportation and Development
NOT TO BE USED FOR CONSTRUCTION, BIDDING, RECORDATION, CONVEYANCE, SALES OR AS THE BASIS FOR THE ISSUANCE OF A PERMIT.	ENGINEER: JOSEPH CAINS III LICENSE #: 33670 DATE: JULY 2015

PLAN & PROFILE SHEET
LA 318
US 90 (FUTURE I-49) LA 318 INTERCHANGE

SHEET NUMBER	B-28
PARISH	ST. MARY
CONTROL SECTION	239-31
STATE PROJECT	H.004932
DESIGNED	JC
CHECKED	CMH
DETAILED	TW
CHECKED	JC
SERIES NUMBER	

DEFINITIVE DESIGN
DATE: 7/1/2015

NO.	REVISION DESCRIPTION	BY	DATE

Stantec

STA. 417+11.13 NW FRONTAGE ROAD =
STA. 10+00.00 LOCAL ACCESS ROAD

NOTES:
1. CONTRACTOR SHALL COLD PLANE & OVERLAY THE LOCAL ACCESS ROAD AS SHOWN AND FOR THE ENTIRE LENGTH OF THE EXISTING LOCAL ACCESS ROAD TO REMAIN (STA. 419+32.55 TO STA. 464+57.68). SEE SHEETS B-7, B-10, B-11, B-12, & B-13 FOR ADDITIONAL INFORMATION.
2. LOCAL ACCESS ROAD RADIUS (250.00) & SUPER-ELEVATION SHOWN (4.1% S.E.) MEETS LADOTD PRR GUIDELINES FOR 30 MPH, RL-2 GUIDELINES (40 MPH) APPLY FOR THE LOCAL ACCESS ROAD PER THE RFP, HOWEVER A REDUCED SPEED WAS CONSIDERED FOR THE INTERSECTION APPROACH TO THE PROPOSED NW FRONTAGE ROAD INTERSECTION.

SCALE 1"=50'

GIBBY ROAD ℄
NW FRONTAGE ROAD ℄
REQ'D R/W
LIMITS OF CONSTR.
9'
P.T. STA. 419+69.00
10+00
S 81°25'15.9" E
P.C. STA. 10+37.89
S 63°34'44.1" W
420+00
P.I. STA. 12+09.00
D = 22°55'05.92"
Δ = 68°46'40.51"LT.
T = 171.11'
L = 300.10'
R = 250.00'
N = 499608.2228
E = 3181533.4947
425+00
+61.13
(NW FRONTAGE RD.)
70.0' RT.
118+69.09
(US 90 ℄)
191.51' LT.
P.T. STA. 13+37.99
GRADE TO DRAIN
LOCAL ACCESS ROAD ℄
EQUATION: -40594.56
STA. 13+37.99 LOCAL ACCESS ROAD L.B. (PROJECTED & ADOPTED) =
STA. 419+32.55 LOCAL ACCESS ROAD L.A. (SURVEYED)
119+50.69 (US 90 ℄)
TIE TO EXIST. R/W
EXIST. R/W
30'
10'
S 60°11'56.5" E
LOCAL ACCESS ROAD ℄ (SURVEYED)
REQ'D C OF A
+37.99
END FULL CONSTRUCTION
BEGIN COLD PLANE & OVERLAY

FULL SUPER (-4.1%)
S.E. TRANS.
N.C. (2.5%)
+17.99
+12.55
+37.99
+32.55
NEW CONSTRUCTION
COLD PLANE & OVERLAY
EQUATION: -404594.56
STA. 13+37.99 LOCAL ACCESS ROAD L.B. (P & A) =
STA. 419+32.55 LOCAL ACCESS ROAD L.A. (SURVEYED)
S.E. TRANS.
+76.00
+11.00

PVI 10+11.00
ELEV. 10.87
0.50%
PVI 11+74.50
ELEV. 11.69
0.00%
PVI 13+37.99
ELEV. 11.69
PVC 11+14.50
ELEV. 11.39
120' V.C.
PVT 12+34.50
ELEV. 11.69

35 30 25 20 15 10 5 0 -5 -10
9.99
9.74 11.32
9.54 11.67
11.54 11.69
11.58
11.56
11.59
10+00
13+37.99 L.B.
419+32.55 L.A.
420+00
425+00

DEFINITIVE DESIGN

PRELIMINARY	*Louisiana Department of Transportation and Development*
NOT TO BE USED FOR CONSTRUCTION, BIDDING, RECORDATION, CONVEYANCE, SALES OR AS THE BASIS FOR THE ISSUANCE OF A PERMIT.	*ENGINEER: JOSEPH CAINS III* *LICENSE #: 33670* *DATE: JULY 2015*

SHEET NUMBER B-29
PARISH ST. MARY
CONTROL SECTION 424-05
STATE PROJECT H.004932
DESIGNED JC
CHECKED CMH
DETAILED TW
CHECKED JC
SERIES NUMBER
NO. DATE REVISION DESCRIPTION BY

DEFINITIVE DESIGN
DATE: 7/1/2015

PLAN & PROFILE SHEET
LOCAL ACCESS ROAD

US 90 (FUTURE I-49) LA 318 INTERCHANGE

Stantec

PRELIMINARY PLANS
I:\THB\LA 318_US 90 DB\Definitive Design\DGN\Sheets\04_Plan & Profile_Rev1.dgn
6/30/2015 18:06

GENERAL NOTES:

1. EXISTING GROUND LINE SHOWN IN PROFILE IS DERIVED FROM A DIGITAL TERRAIN MODEL ALONG THE PROJECTED AND ADOPTED CENTERLINE.

LEGEND

- REQ'D ASPHALT PAVEMENT
- REMOVAL OF SURFACING & BASE
- COLD PLANE & OVERLAY

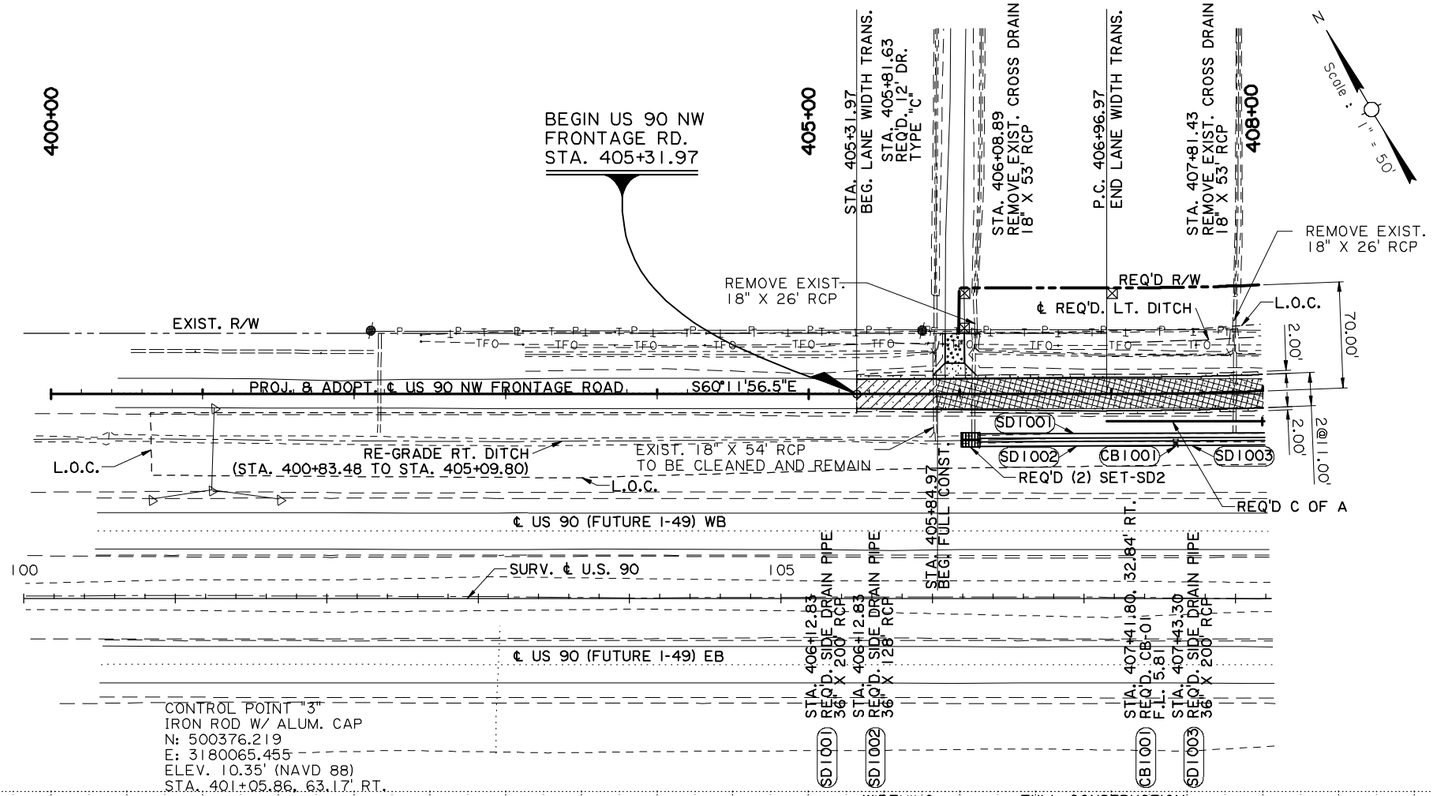

DEFINITIVE DESIGN

PRELIMINARY	Louisiana Department of Transportation and Development
NOT TO BE USED FOR CONSTRUCTION, BIDDING, RECORDATION, CONVEYANCE, SALES OR AS THE BASIS FOR THE ISSUANCE OF A PERMIT.	ENGINEER: DENNIS M. HYMEL, JR. LICENSE #: 38172 DATE: JULY 2015

DEFINITIVE DESIGN

SHEET NUMBER B-30

PARISH	CONTROL SECTION	STATE PROJECT
ST. MARY	424-05, 239-31	H.004932

DESIGNED	P. OLIVIER
CHECKED	D. HYMEL
DETAILED	G. ARIAS
CHECKED	D. BINET
SERIES NUMBER	

NO.	DATE	REVISION OR CHANGE ORDER DESCRIPTION	BY

PLAN & PROFILE SHEET
NW FRONTAGE ROAD
US 90 - LA 318 INTERCHANGE

PRELIMINARY PLANS

I:\THB\LA 318_US 90 DB\Definitive Design\DGN\Sheets\05_Plan & Profile_Rev1.dgn 6/30/2015 18:08

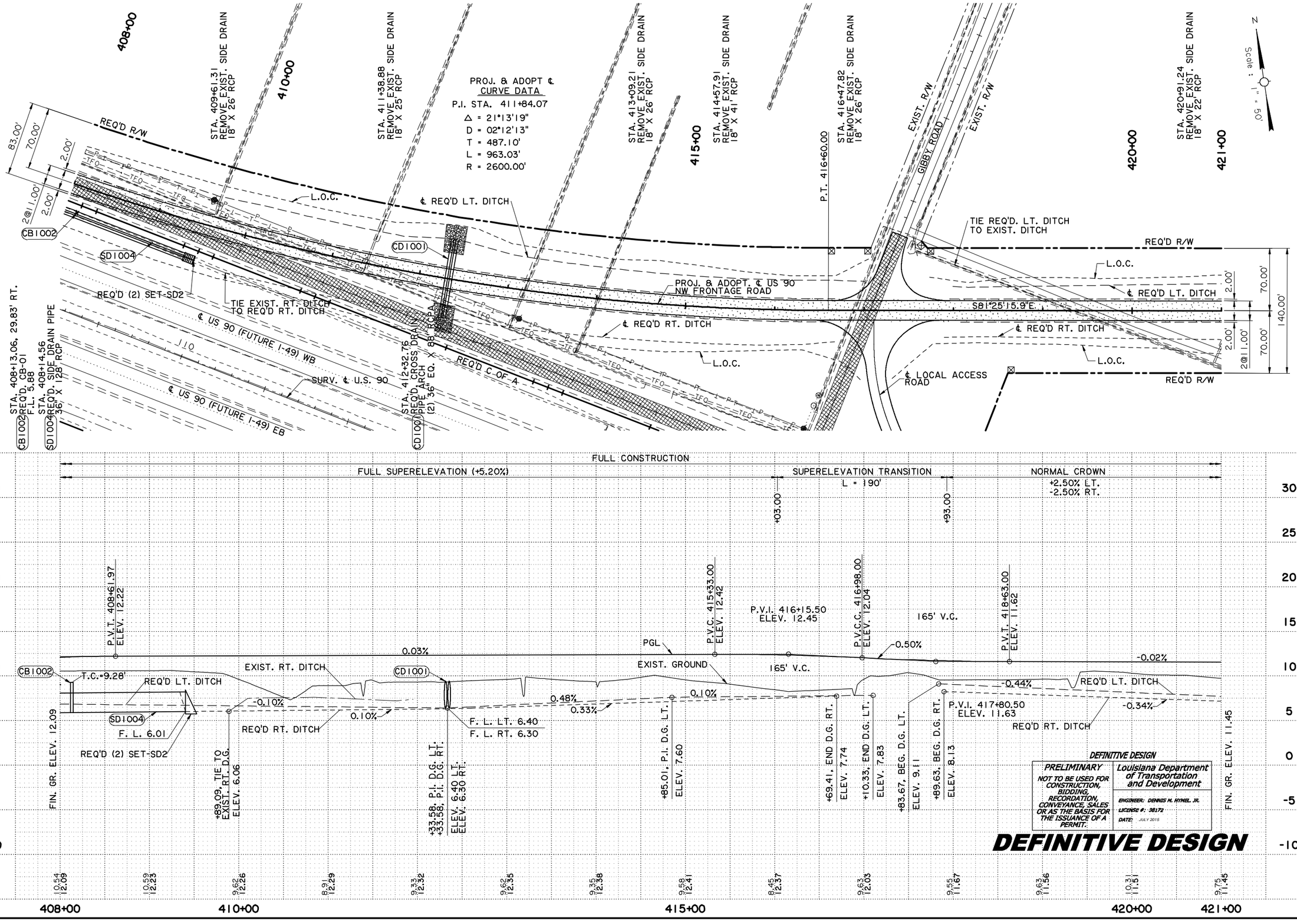

DEFINITIVE DESIGN

PRELIMINARY
NOT TO BE USED FOR CONSTRUCTION, BIDDING, RECORDATION, CONVEYANCE, SALES OR AS THE BASIS FOR THE ISSUANCE OF A PERMIT.

Louisiana Department of Transportation and Development
ENGINEER: DENNIS M. HYMEL JR.
LICENSE #: 38172
DATE: JULY 2015

DEFINITIVE DESIGN

SHEET NUMBER B-31
PARISH ST. MARY
CONTROL SECTION 424-05, 239-31
STATE PROJECT H.004932
DESIGNED P. OLIVIER
CHECKED D. HYMEL
DETAILED G. ARIAS
CHECKED D. BINET
SERIES NUMBER
REVISION OR CHANGE ORDER DESCRIPTION | BY | DATE | NO.

PLAN & PROFILE SHEET
NW FRONTAGE ROAD
US 90 - LA 318 INTERCHANGE

TBS

PRELIMINARY PLANS
I:\THB\LA 318_US 90 DB\Definitive Design\DGN\Sheets\06_Plan & Profile_Rev1.dgn 6/30/2015 19:20

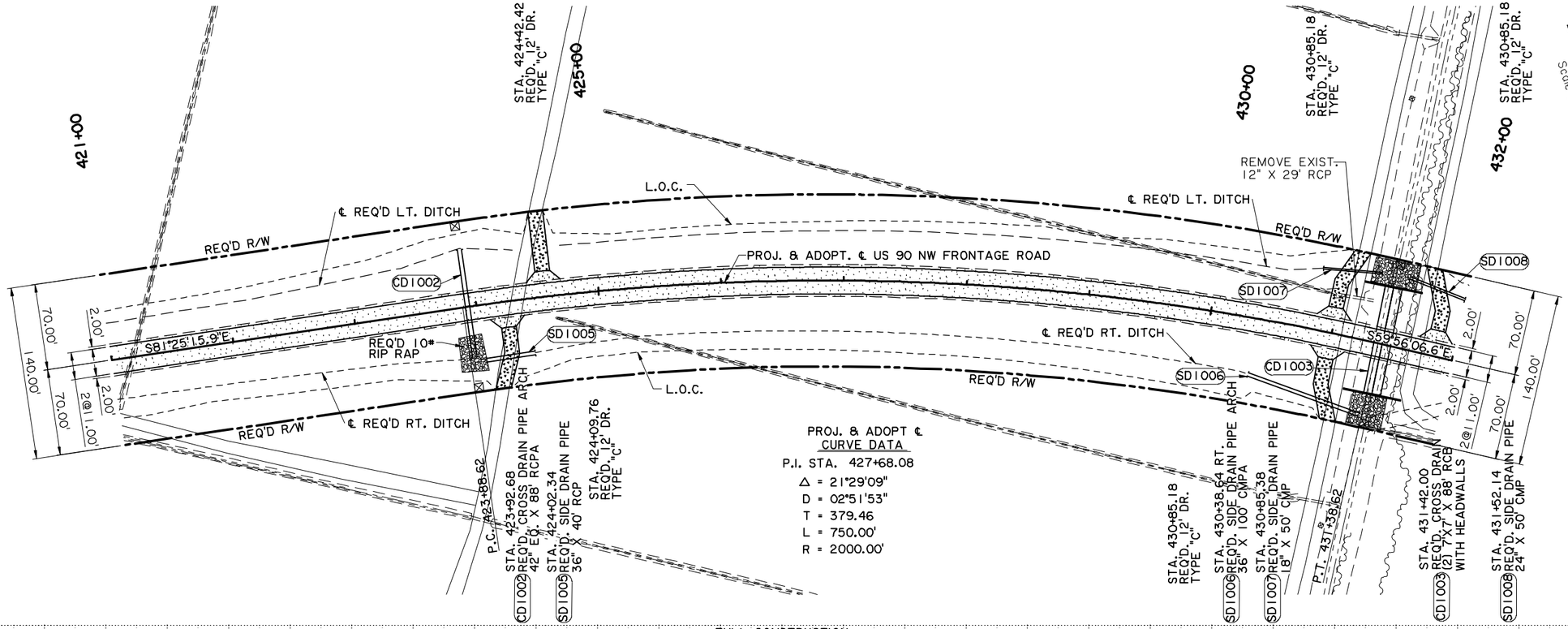

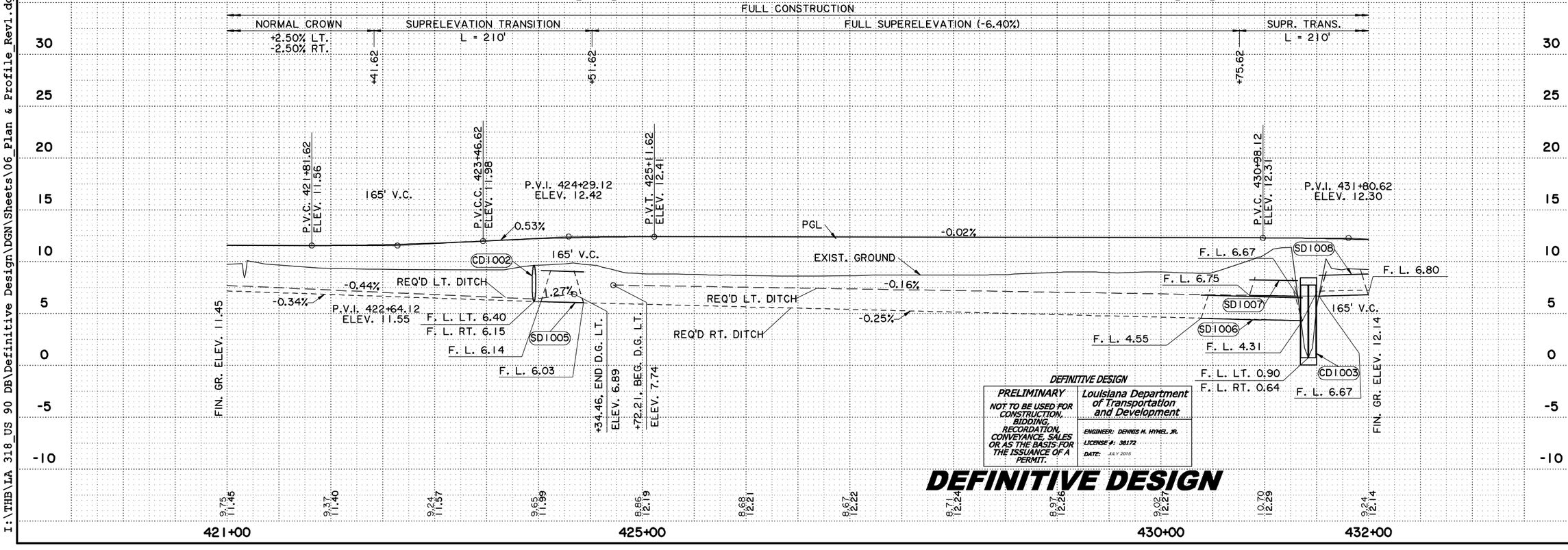

DEFINITIVE DESIGN

PRELIMINARY
NOT TO BE USED FOR CONSTRUCTION, BIDDING, RECORDATION, CONVEYANCE, SALES OR AS THE BASIS FOR THE ISSUANCE OF A PERMIT.

Louisiana Department of Transportation and Development
ENGINEER: DENNIS M. HYMEL JR.
LICENSE #: 38172
DATE: JULY 2015

DEFINITIVE DESIGN

SHEET NUMBER B-32

PARISH	CONTROL SECTION	STATE PROJECT
ST. MARY	424-05, 239-31	H.004932

DESIGNED P. OLIVIER, D. HYMEL	DETAILED G. ARIAS, D. BINET	SERIES NUMBER
CHECKED	CHECKED	

NO.	DATE	REVISION OR CHANGE ORDER DESCRIPTION	BY

PLAN & PROFILE SHEET
NW FRONTAGE ROAD
US 90 - LA 318 INTERCHANGE

DOTD
TBS

PRELIMINARY PLANS

I:\THB\LA 318_US 90 DB\Definitive Design\DGN\Sheets\07_Plan & Profile_Rev1.dgn 6/30/2015 18:14

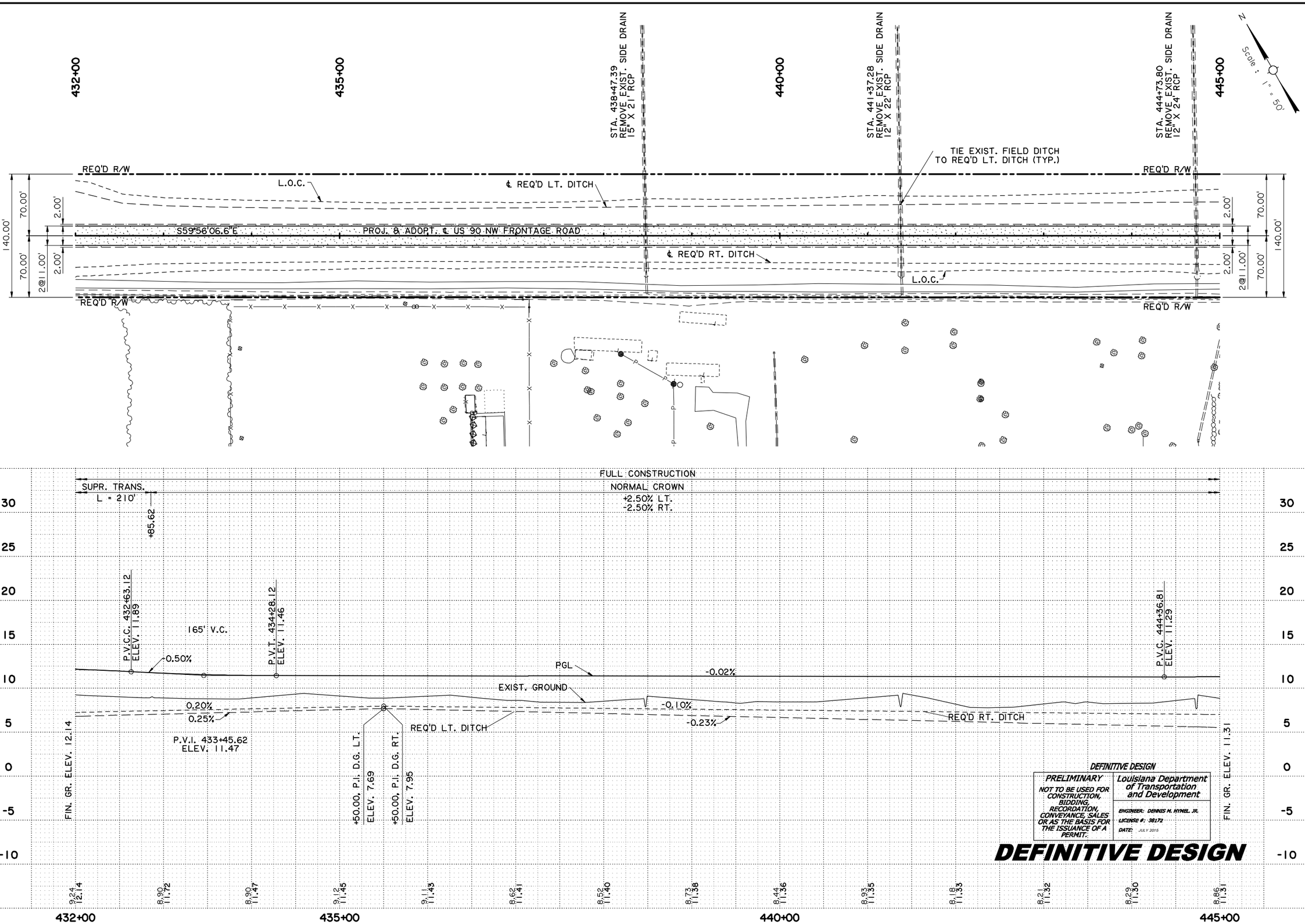

DEFINITIVE DESIGN

PRELIMINARY	Louisiana Department of Transportation and Development
NOT TO BE USED FOR CONSTRUCTION, BIDDING, RECORDATION, CONVEYANCE, SALES OR AS THE BASIS FOR THE ISSUANCE OF A PERMIT.	ENGINEER: DENNIS M. HYMEL, JR. LICENSE #: 38172 DATE: JULY 2015

DEFINITIVE DESIGN

SHEET NUMBER B-33

DESIGNED P. OLIVIER	PARISH ST. MARY	CONTROL SECTION 424-05, 239-31	STATE PROJECT H.004932
CHECKED D. HYMEL			
DETAILED G. ARIAS			
CHECKED D. BINET			

NO.	DATE	REVISION OR CHANGE ORDER DESCRIPTION	BY

PLAN & PROFILE SHEET
NW FRONTAGE ROAD
US 90 - LA 318 INTERCHANGE

STATE OF LOUISIANA DENNIS M. HYMEL, JR. 38172 REGISTERED PROFESSIONAL ENGINEER

DOTD LOUISIANA DEPARTMENT OF TRANSPORTATION AND DEVELOPMENT

TBS

PRELIMINARY PLANS

I:\THB\LA 318_US 90 DB\Definitive Design\DGN\Sheets\08_Plan & Profile_Rev1.dgn 6/30/2015 19:21

445+00 | 450+00 | 455+00 | 458+00

STA. 448+42.20 REMOVE EXIST. SIDE DRAIN 10' X 31' RCP

STA. 450+19.73 REQ'D. 12" DR. TYPE "C"

TIE EXIST. FIELD DITCH TO REQ'D. LT. DITCH (TYP.)

REQ'D R/W

L.O.C.

CD1004

℄ REQ'D LT. DITCH

S59°56'06.6"E PROJ. & ADOPT. ℄ US 90 NW FRONTAGE ROAD

CD1005

℄ REQ'D RT. DITCH

TIE REQ'D. RT. DITCH TO EXIST. DITCH

140.00' | 70.00' | 2.00' | 2@11.00' | 2.00' | 70.00'

STA. 446+51.94 REQ'D. CROSS DRAIN PIPE 48" X 88' RCPA (CD1004)

STA. 450+27.66 REQ'D. SIDE DRAIN PIPE 24" X 96' CMPA (SD1009)

STA. 450+54.99 REQ'D. CROSS DRAIN PIPE (2) 48" X 28' RCP (45° SKEW) W/ HEADWALLS (CD1005)

FULL CONSTRUCTION
NORMAL CROWN
+2.50% LT.
-2.50% RT.

P.V.I. 445+19.31 ELEV. 11.28

P.V.C.C. 446+01.81 ELEV. 11.52

P.V.I. 446+84.32 ELEV. 11.76

P.V.T. 447+66.82 ELEV. 11.75

P.V.C. 450+55.24 ELEV. 11.70

P.V.I. 451+37.74 ELEV. 11.69

P.V.C.C. 452+20.24 ELEV. 11.48

P.V.T. 453+85.24 ELEV. 11.29

P.V.I. 453+02.74 ELEV. 11.28

165' V.C.

0.29% | -0.02% | 0.25% | 0.20% | 0.15%

PGL | EXIST. GROUND | REQ'D. LT. DITCH | REQ'D RT. DITCH

3.47% | 1.46% | -0.33% | 0.10% | 1.91%

F. L. 6.62 | F. L. 6.38

F. L. LT. 5.20 | F. L. RT. 4.73

F. L. LT. 3.90 | F. L. RT. 3.76

FIN. GR. ELEV. 11.31

+51.90, P.I. D.G. RT. ELEV. 6.95

+51.81, P.I. D.G. RT. ELEV. 3.48

+00.12, P.I. D.G. LT. ELEV. 7.73

+55.23, P.I. D.G. RT. ELEV. 3.76

+94.84, P.I. D.G. LT. ELEV. 6.35

+87.25, P.I. D.G. RT. ELEV. 6.41

FIN. GR. ELEV. 11.36

8.86 11.31 | 8.51 11.44 | 9.36 11.59 | 9.51 11.63 | 9.14 11.65 | 9.71 11.67 | 9.78 11.67 | 9.11 11.53 | 8.86 11.34 | 9.01 11.30 | 9.01 11.31 | 8.90 11.33 | 9.16 11.34 | 9.28 11.36

30 | 25 | 20 | 15 | 10 | 5 | 0 | -5 | -10

DEFINITIVE DESIGN

PRELIMINARY	Louisiana Department of Transportation and Development
NOT TO BE USED FOR CONSTRUCTION, BIDDING, RECORDATION, CONVEYANCE, SALES OR AS THE BASIS FOR THE ISSUANCE OF A PERMIT.	ENGINEER: DENNIS M. HYMEL JR. LICENSE #: 38172 DATE: JULY 2015

DEFINITIVE DESIGN

SHEET NUMBER B-34

PARISH: ST. MARY | CONTROL SECTION: 424-05, 239-31 | STATE PROJECT: H.004932

DESIGNED P. OLIVIER, CHECKED D. HYMEL | DETAILED G. ARIAS, CHECKED D. BINET | SERIES NUMBER

REVISION OR CHANGE ORDER DESCRIPTION | DATE | NO. | BY

PLAN & PROFILE SHEET
NW FRONTAGE ROAD
US 90 - LA 318 INTERCHANGE

TBS

PRELIMINARY PLANS

I:\THB\LA 318_US 90 DB\Definitive Design\DGN\Sheets\09_Plan & Profile_Rev1.dgn 6/30/2015 18:39

NOTE: FOR ADDITIONAL DRAINAGE STRUCTURE DETAILS SEE LA 318 PLAN & PROFILE SHEETS.

458+00 460+00 465+00

REQ'D R/W

℄ REQ'D. LT. DITCH

L.O.C.

S59°56'06.6"E PROJ. & ADOPT. ℄ US 90 NW FRONTAGE ROAD

℄ REQ'D. RT. DITCH

L.O.C.

REQ'D R/W

140.00' 70.00' 2.00' 2@11.00' 2.00' 70.00'

EXIST. R/W

STA. 467+48.95

STA. 466+93.37

R= 78.00'

R= 60.00'

STA. 466+93.93

STA. 467+53.31

CD6

SD6

℄ LA HWY 318

REQ'D ℄ OF A

PROJ. & ADOPT. ℄ US 90 NE FRONTAGE ROAD

STA. 468+00.00 PROJ. & ADOPT. ℄ US 90 NW FRONTAGE RD. = STA. 338+14.34 PROJ. & ADOPT. ℄ LA 318 = STA. 500+00.00 PROJ. & ADOPT. ℄ US 90 NE FRONTAGE RD.

END US 90 NW FRONTAGE RD. STA. 467+73.20

N Scale : 1" = 50'

FULL CONSTRUCTION
NORMAL CROWN
+2.50% LT.
-2.50% RT.

⊡ CROSS SLOPE VARIES

+02.30

P.V.C. 463+43.20 ELEV. 11.45

165' V.C.

P.V.T. 465+08.20 ELEV. 11.80

P.V.C. 466+08.20 ELEV. 12.20

P.V.I. 466+90.70 ELEV. 12.54

P.V.T. 467+73.20 ELEV. 12.54 END CONSTRUCTION

PGL

EXIST. GROUND

REQ'D RT. DITCH

REQ'D LT. DITCH

0.02%

0.20%

0.15%

0.41%

0.13%

FIN. GR. ELEV. 11.36

+17.54, P.I. D.G. RT. ELEV. 8.93

P.V.I. 464+25.70 ELEV. 11.46

165' V.C.

+31.28, END D.G. RT. ELEV. 9.33

+44.89, END D.G. LT. ELEV. 8.88

30 25 20 15 10 5 0 -5 -10

9.28 11.36 | 9.29 11.38 | 9.48 11.39 | 9.57 11.41 | 10.12 11.42 | 10.00 11.44 | 9.72 11.49 | 9.57 11.76 | 9.93 12.17 | 10.38 12.47

458+00 460+00 465+00

DEFINITIVE DESIGN

PRELIMINARY
NOT TO BE USED FOR CONSTRUCTION, BIDDING, RECORDATION, CONVEYANCE, SALES OR AS THE BASIS FOR THE ISSUANCE OF A PERMIT.

Louisiana Department of Transportation and Development

ENGINEER: DENNIS M. HYMEL, JR.
LICENSE #: 38172
DATE: JULY 2015

DEFINITIVE DESIGN

SHEET NUMBER B-35

PARISH	CONTROL SECTION	STATE PROJECT
ST. MARY	424-05, 239-31	H.004932

DESIGNED P. OLIVIER
CHECKED D. HYMEL
DETAILED G. ARIAS
CHECKED D. BINET
SERIES NUMBER

NO.	DATE	REVISION OR CHANGE ORDER DESCRIPTION	BY

PLAN & PROFILE SHEET
NW FRONTAGE ROAD
US 90 - LA 318 INTERCHANGE

STATE OF LOUISIANA DEPARTMENT OF TRANSPORTATION AND DEVELOPMENT

DOTD

TBS

GENERAL NOTES:

1. EXISTING GROUND LINE SHOWN IN PROFILE IS DERIVED FROM A DIGITAL TERRAIN MODEL ALONG THE PROJECTED AND ADOPTED CENTERLINE.
2. FOR ADDITIONAL DRAINAGE STR. DETAILS SEE LA 318 PLAN & PROFILE SHEETS.

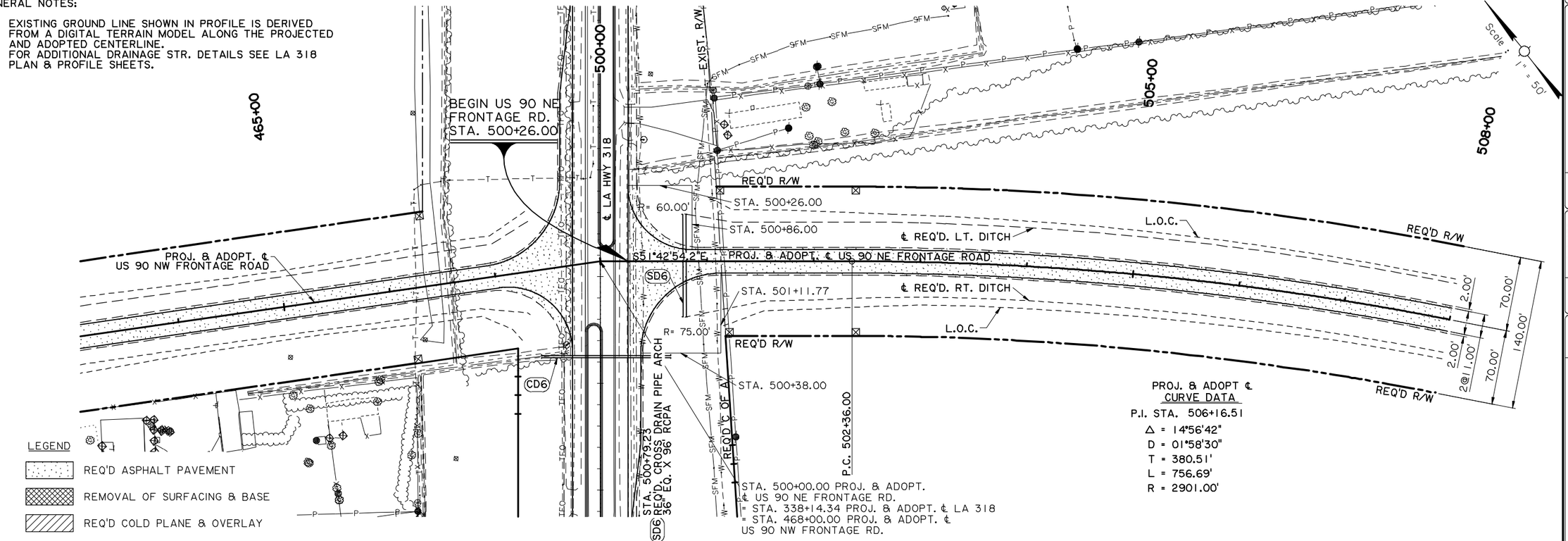

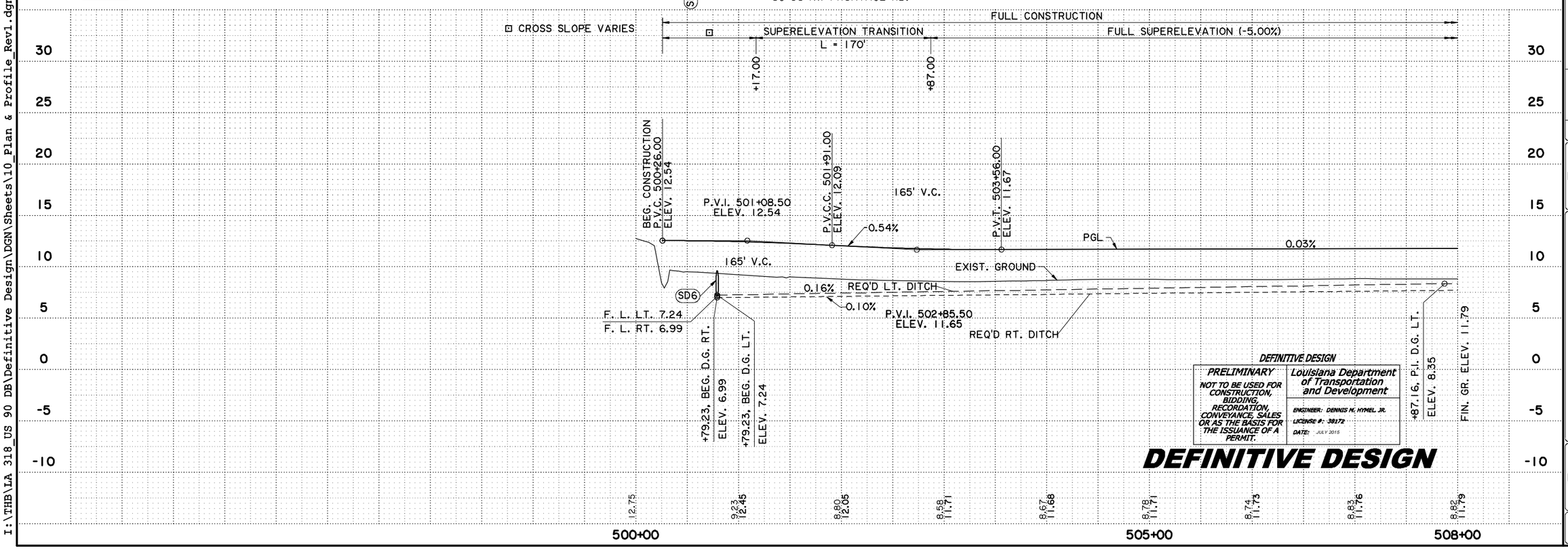

DEFINITIVE DESIGN

PRELIMINARY	Louisiana Department of Transportation and Development
NOT TO BE USED FOR CONSTRUCTION, BIDDING, RECORDATION, CONVEYANCE, SALES OR AS THE BASIS FOR THE ISSUANCE OF A PERMIT.	ENGINEER: DENNIS N. HYMEL JR. LICENSE #: 38172 DATE: JULY 2015

DEFINITIVE DESIGN

PRELIMINARY PLANS

I:\THB\LA 318_US 90 DB\Definitive Design\DGN\Sheets\10_Plan & Profile_Rev1.dgn 6/30/2015 18:40

SHEET NUMBER B-36

PARISH	CONTROL SECTION	STATE PROJECT
ST. MARY	424-05, 239-31	H.004932

DESIGNED	DETAILED	SERIES NUMBER
P. OLIVIER	G. ARIAS	
CHECKED D. HYMEL	CHECKED D. BINET	

NO.	DATE	REVISION OR CHANGE ORDER DESCRIPTION	BY

PLAN & PROFILE SHEET
NE FRONTAGE ROAD
US 90 - LA 318 INTERCHANGE

PRELIMINARY PLANS

I:\THB\LA 318_US 90 DB\Definitive Design\DGN\Sheets\11_Plan & Profile_Rev1.dgn 6/30/2015 19:03

508+00 510+00 515+00 518+00

STA. 512+30.74 REQ'D. 12" DR. TYPE "C"

STA. 512+58.96 REMOVE EXIST. SIDE DRAIN 15" X 22" CPP

STA. 512+61.26 REMOVE EXIST. SIDE DRAIN 18" X 25" RCP

STA. 513+00.40 REMOVE EXIST. SIDE DRAIN 18" X 25" RCP

P.C. 511+88.63

PROJ. & ADOPT ℄ CURVE DATA
P.I. STA. 517+88.88
Δ = 23°25'44"
D = 01°58'57"
T = 599.25'
L = 1181.75'
R = 2890.00'

N Scale : 1" = 50'

TIE REQ'D. LT. DITCH TO EXIST. DITCH

REQ'D R/W

℄ REQ'D. LT. DITCH

S36°46'12.5"E

℄ REQ'D. RT. DITCH

TIE REQ'D. RT. DITCH TO EXIST. DITCH

REQ'D R/W

P.T. 509+92.69

SD1010

CD1006

L.O.C.

CD1007

PROJ. & ADOPT. ℄ US 90 NE FRONTAGE ROAD

L.O.C.

REQ'D. OUTFALL DITCH RT.

REQ'D ℄ OF A

STA. 512+24.58 CD1006 REQ'D. CROSS DRAIN PIPE (2) 36" X 88" RCP

STA. 512+12.03 SD1010 REQ'D. SIDE DRAIN PIPE 24" X 64' CMP

STA. 516+30.00 CD1007 REQ'D. CROSS DRAIN PIPE ARCH 30" EQ. X 88" RCPA

℄ US 90 (FUTURE I-49) WB

℄ US 90 (FUTURE I-49) EB

140.00' 70.00' 2.00' 22.00' 2.00' 70.00' 2.00' 2@1.00' 83.00'

FULL CONSTRUCTION

FULL SUPERELEVATION (-5.00%) SUPER. TRANS. L = 244 FULL SUPERELEVATION (+5.00%)

+68.69 +13.63

P.V.C. 509+26.16 ELEV. 11.82

165' V.C.

P.V.I. 510+08.66 ELEV. 11.84

P.V.C.C. 510+91.43 ELEV. 12.76

P.V.I. 511+73.66 ELEV. 13.68

P.V.T. 512+56.16 ELEV. 13.81

0.03% 1.11% 0.16% PGL

-0.10% -0.10%

REQ'D LT. DITCH F. L. 7.92

F. L. LT. 7.92 F. L. RT. 7.69

EXIST. GROUND 0.17% 0.14%

REQ'D LT. DITCH REQ'D RT. DITCH

0.29% 0.37%

F. L. LT. 8.64 F. L. RT. 8.22

FIN. GR. ELEV. 11.79

+08.90, P.I. D.G. RT. ELEV. 7.92

+08.77, P.I. D.G. LT. ELEV. 7.92

+08.60, P.I. D.G. LT. +41.51, P.I. D.G. RT. ELEV. 7.92 LT. ELEV. 7.69 RT.

+30.00, P.I. D.G. LT. +30.00, P.I. D.G. RT. ELEV. 8.64 LT. ELEV. 8.22 RT.

FIN. GR. ELEV. 14.69

30 25 20 15 10 5 0 -5 -10

8.82 11.79 | 8.89 11.81 | 9.00 12.02 | 9.73 12.86 | 9.39 13.63 | 9.79 13.88 | 9.47 14.04 | 9.63 14.21 | 9.74 14.37 | 10.04 14.55 | 10.73 14.69

508+00 510+00 515+00 518+00

DEFINITIVE DESIGN

PRELIMINARY
NOT TO BE USED FOR CONSTRUCTION, BIDDING, RECORDATION, CONVEYANCE, SALES OR AS THE BASIS FOR THE ISSUANCE OF A PERMIT.

Louisiana Department of Transportation and Development
ENGINEER: DENNIS M. HYMEL JR.
LICENSE #: 38172
DATE: JULY 2015

DEFINITIVE DESIGN

SHEET NUMBER B-37

PARISH ST. MARY

CONTROL SECTION 424-05, 239-31

STATE PROJECT H.004932

DESIGNED P. OLIVIER
CHECKED D. HYMEL
DETAILED G. ARIAS
CHECKED D. BINET

SERIES NUMBER

NO. DATE BY REVISION OR CHANGE ORDER DESCRIPTION

PLAN & PROFILE SHEET
NE FRONTAGE ROAD
US 90 - LA 318 INTERCHANGE

STATE OF LOUISIANA DEPARTMENT OF TRANSPORTATION AND DEVELOPMENT

TBS

PRELIMINARY PLANS

I:\THB\LA 318_US 90 DB\Definitive Design\DGN\Sheets\12_Plan & Profile_Rev1.dgn 6/30/2015 19:05

518+00 | 520+00 | 525+00 | 530+00

STA. 518+69.09 REMOVE EXIST. SIDE DRAIN 18" X 25' RCP

P.T. 523+71.39 BEGIN LANE WIDTH TRANSITION

EXIST. R/W

PARISH RD. 15

EXIST. R/W

STA. 525+36.45 END LANE WIDTH TRANSITION

END US 90 NE FRONTAGE RD. STA. 525+36.45

PROJ. & ADOPT. ℄ US 90 NE FRONTAGE ROAD

REQ'D R/W

L.O.C.

℄ REQ'D. LT. DITCH

83.00'
70.00'
2.00'
2@11.00'
2.00'

S62°56'17.9"E

℄ REQ'D. RT. DITCH

GRADE TO DRAIN

REQ'D C OF A

STA. 524+85.49 END FULL CONST.

℄ US 90 (FUTURE I-49) EB

SURV. ℄ US 90

℄ US 90 (FUTURE I-49) WB

185 190 195

Scale: 1" = 50'

FULL CONSTRUCTION | WIDENING

FULL SUPERELEVATION (+5.00%) | SUPER. TRANS. L = 170'

⊡ CROSS SLOPE VARIES

+20.39 +85.49 +36.45

P.V.C. 522+06.45 ELEV. 15.35

P.V.I. 522+88.95 ELEV. 15.48

P.V.C.C. 523+71.54 ELEV. 15.07

165' V.C.

P.V.T. 525+36.45 ELEV. 14.67 END CONSTRUCTION

0.16% PGL 0.50%

EXIST. GROUND

REQ'D LT. DITCH 165' V.C.

0.29%

P.V.I. 524+53.95 ELEV. 14.66

0.37%

REQ'D RT. DITCH

FIN. GR. ELEV. 14.69

+02.28, END D.G. RT. ELEV. 9.97

+71.39, END D.G. LT. ELEV. 10.80

30 25 20 15 10 5 0 -5 -10

0.73 14.69 | 1.34 14.85 | 1.25 15.01 | 3.62 15.17 | 4.18 15.34 | 4.54 15.32 | 4.75 14.94 | 4.67 14.89 | 4.61 | 4.46 | 4.31 | 4.16 | 3.98 | 3.89

518+00 520+00 525+00

DEFINITIVE DESIGN

PRELIMINARY — NOT TO BE USED FOR CONSTRUCTION, BIDDING, RECORDATION, CONVEYANCE, SALES OR AS THE BASIS FOR THE ISSUANCE OF A PERMIT.

Louisiana Department of Transportation and Development

ENGINEER: DENNIS M. HYMEL, JR.
LICENSE #: 38172
DATE: JULY 2015

DEFINITIVE DESIGN

SHEET NUMBER B-38

PARISH	CONTROL SECTION	STATE PROJECT
ST. MARY	424-05, 239-31	H.004932

DESIGNED P. OLIVIER
CHECKED D. HYMEL
DETAILED G. ARIAS
CHECKED D. BINET
SERIES NUMBER

NO.	DATE	REVISION OR CHANGE ORDER DESCRIPTION	BY

PLAN & PROFILE SHEET
NE FRONTAGE ROAD
US 90 - LA 318 INTERCHANGE

TBS

PRELIMINARY PLANS
I:\THB\LA 318_US 90 DB\Definitive Design\DGN\Sheets\13_Plan & Profile_SW_Rev1.dgn
6/30/2015 19:06

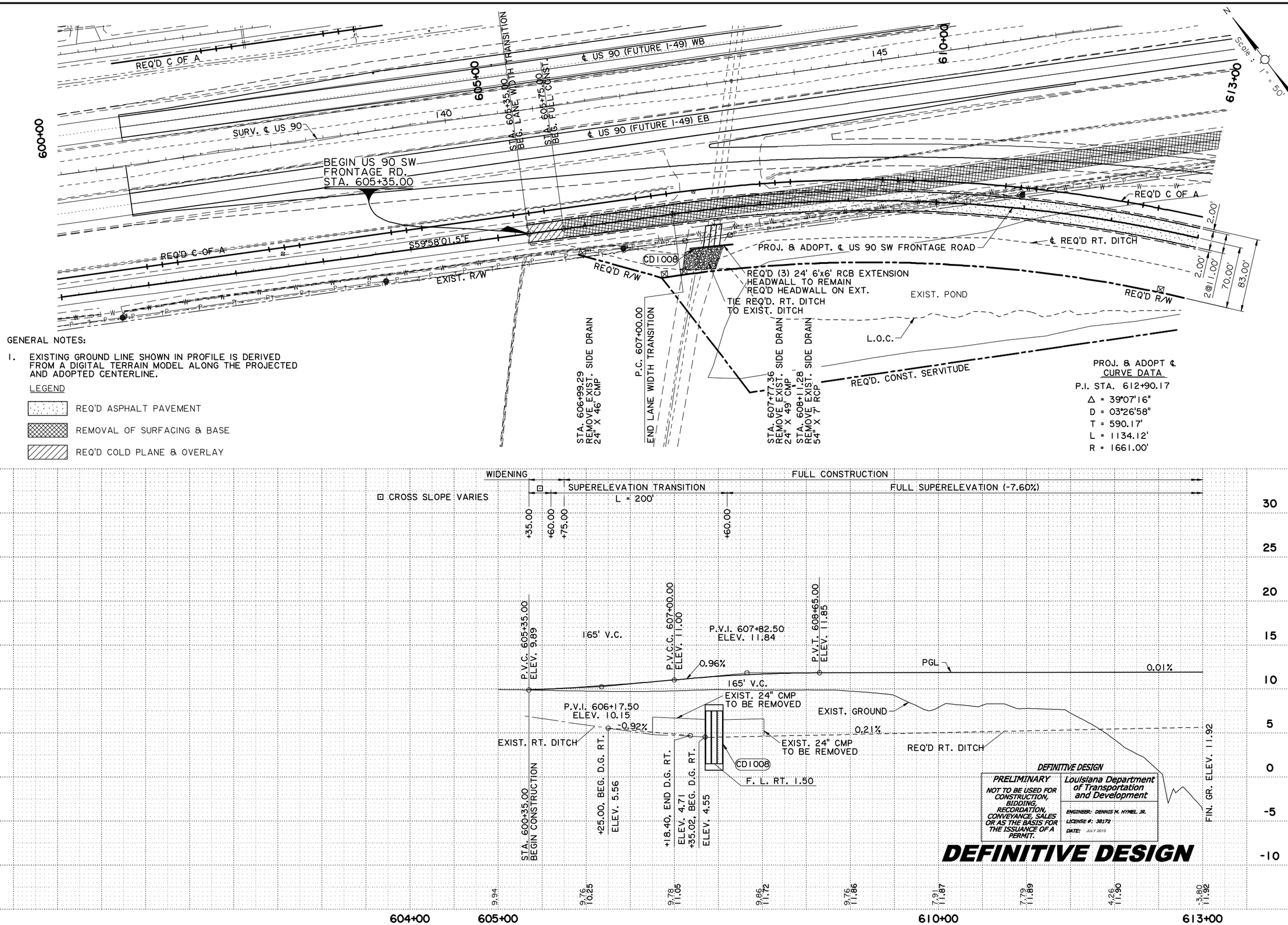

GENERAL NOTES:

1. EXISTING GROUND LINE SHOWN IN PROFILE IS DERIVED FROM A DIGITAL TERRAIN MODEL ALONG THE PROJECTED AND ADOPTED CENTERLINE.

LEGEND

- REQ'D ASPHALT PAVEMENT
- REMOVAL OF SURFACING & BASE
- REQ'D COLD PLANE & OVERLAY

DEFINITIVE DESIGN

PRELIMINARY
NOT TO BE USED FOR CONSTRUCTION, BIDDING, RECORDATION, CONVEYANCE, SALES OR AS THE BASIS FOR THE ISSUANCE OF A PERMIT.

Louisiana Department of Transportation and Development
ENGINEER: DENNIS M. HYMEL JR.
LICENSE #: 38172
DATE: JULY 2015

DEFINITIVE DESIGN

SHEET NUMBER B-39

PARISH	CONTROL SECTION	STATE PROJECT
ST. MARY	424-05, 239-31	H.004932

DESIGNED	CHECKED	DETAILED	CHECKED	SERIES NUMBER
P. OLIVIER	D. HYMEL	G. ARIAS	D. BINET	

NO.	DATE	REVISION OR CHANGE ORDER DESCRIPTION	BY

PLAN & PROFILE SHEET
SW FRONTAGE ROAD
US 90 - LA 318 INTERCHANGE

PRELIMINARY PLANS
I:\THB\LA 318_US 90 DB\Definitive Design\DGN\Sheets\14_Plan & Profile_SW_Rev1.dgn
6/30/2015 18:58

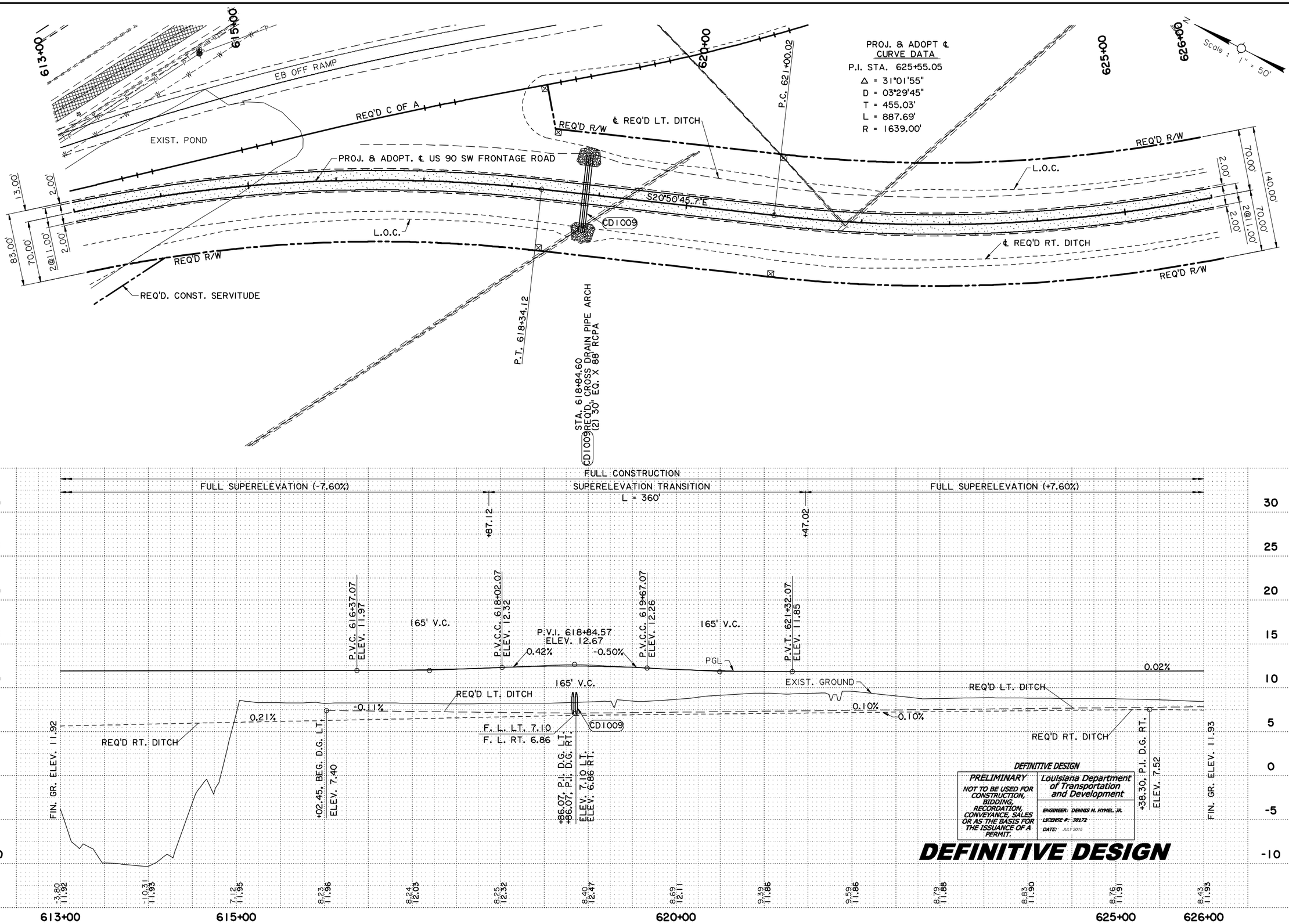

DEFINITIVE DESIGN

PRELIMINARY	Louisiana Department of Transportation and Development
NOT TO BE USED FOR CONSTRUCTION, BIDDING, RECORDATION, CONVEYANCE, SALES OR AS THE BASIS FOR THE ISSUANCE OF A PERMIT.	ENGINEER: DENNIS M. HYMEL JR. LICENSE #: 38172 DATE: JULY 2015

DEFINITIVE DESIGN

SHEET NUMBER	B-40
PARISH	ST. MARY
CONTROL SECTION	424-05, 239-31
STATE PROJECT	H.004932
DESIGNED / CHECKED	P. OLIVIER / D. HYMEL
DETAILED / CHECKED	G. ARIAS / D. BINET
SERIES NUMBER	

NO.	DATE	REVISION OR CHANGE ORDER DESCRIPTION	BY

PLAN & PROFILE SHEET
SW FRONTAGE ROAD
US 90 - LA 318 INTERCHANGE

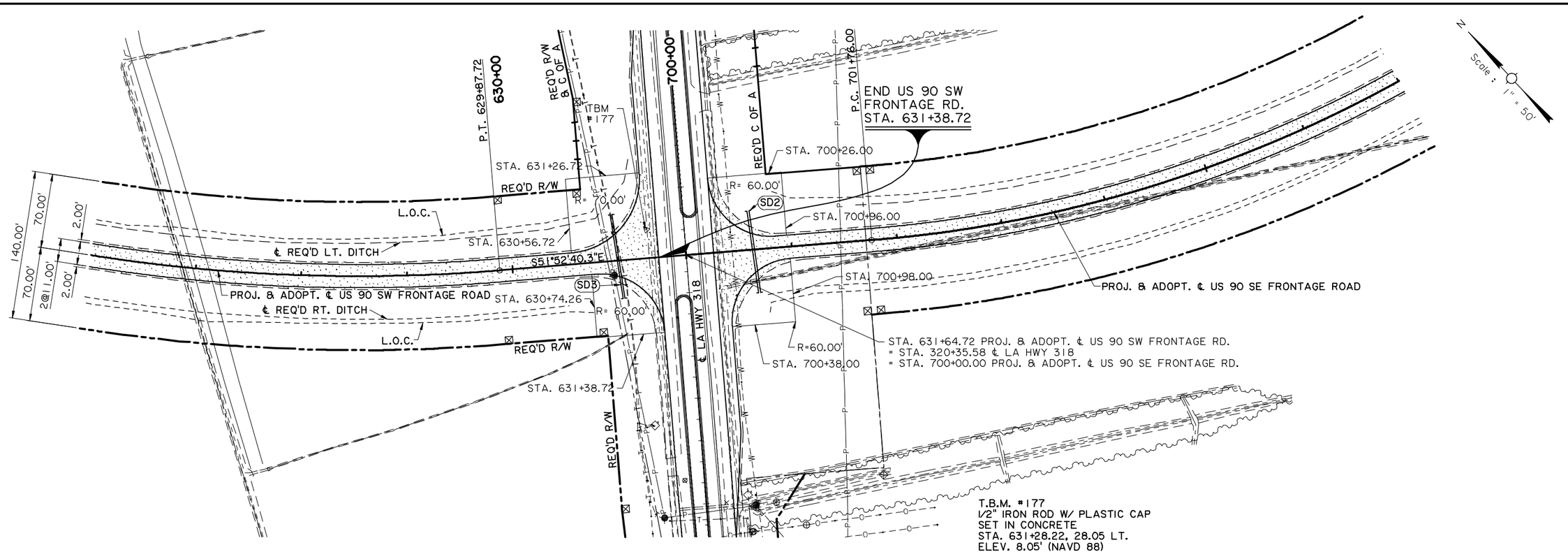

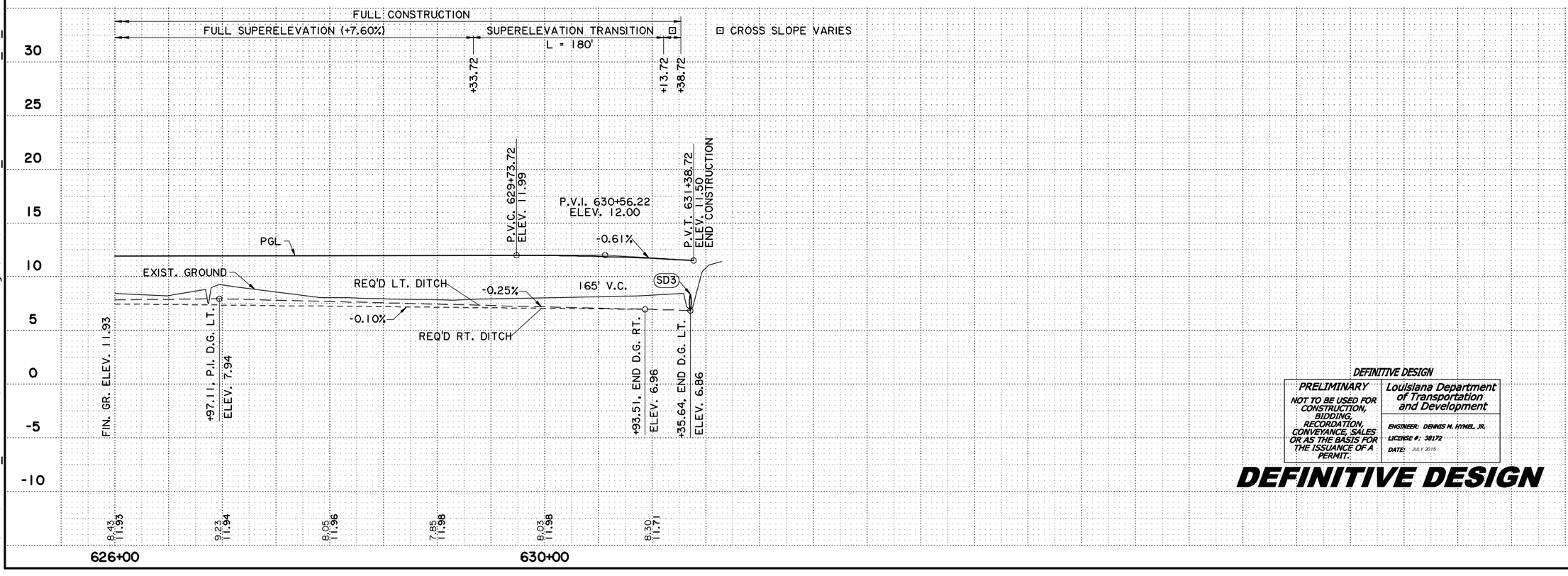

DEFINITIVE DESIGN

PRELIMINARY	Louisiana Department of Transportation and Development
NOT TO BE USED FOR CONSTRUCTION, BIDDING, RECORDATION, CONVEYANCE, SALES OR AS THE BASIS FOR THE ISSUANCE OF A PERMIT.	ENGINEER: DENNIS M. HYMEL JR. LICENSE #: 38172 DATE: JULY 2015

DEFINITIVE DESIGN

PRELIMINARY PLANS

I:\THB\LA 318_US 90 DB\Definitive Design\DGN\Sheets\15 Plan & Profile_SW_Rev1.dgn 6/30/2015 19:11

SHEET NUMBER	B-41
PARISH	ST. MARY
CONTROL SECTION	424-05, 239-31
STATE PROJECT	H.004932
DESIGNED	P. OLIVIER
CHECKED	D. HYMEL
DETAILED	G. ARIAS
CHECKED	D. BINET
SERIES NUMBER	

REVISION OR CHANGE ORDER DESCRIPTION | DATE | NO. | BY

PLAN & PROFILE SHEET
SW FRONTAGE ROAD
US 90 - LA 318 INTERCHANGE

PRELIMINARY PLANS
I:\THB\LA 318_US 90 DB\Definitive Design\DGN\Sheets\16 Plan & Profile_SE_Rev1.dgn
6/30/2015 19:09

PROJ. & ADOPT ℄ CURVE DATA
P.I. STA. 707+73.86
Δ = 51°28'55"
D = 04°37'14"
T = 597.86'
L = 1114.18'
R = 1240.00'

BEGIN US 90 SE FRONTAGE RD. STA. 700+26.00

P.T. 629+87.72

630+00

STA. 631+26.72

STA. 630+56.72

R= 70.00'

LA 318 SB

700+00

STA. 700+49.38 REMOVE EXIST. SIDE DRAIN 12" X 21" PVC

P.C. 701+76.00

707+00

705+00

REQ'D C OF A

STA. 700+26.00

R= 60.00'

REQ'D R/W

SD2

L.O.C.

℄ REQ'D LT. DITCH

PROJ. & ADOPT ℄ US 90 SE FRONTAGE ROAD

STA. 700+96.00

S51°52'40.3"E

70.00' 2.00' 2@11.00' 2.00' 70.00' 140.00'

SD3

STA. 630+74.26

PROJ. & ADOPT ℄ US 90 SW FRONTAGE ROAD

R=60.00'

STA. 631+38.72

LA 318 NB

STA. 700+98.00

R=60.00'

STA. 700+38.00

REQ'D R/W

L.O.C.

TIE REQ'D. RT. DITCH TO EXIST. DITCH

℄ REQ'D RT. DITCH

STA. 700+00.00 PROJ. & ADOPT ℄ US 90 SE FRONTAGE RD.
= STA. 320+35.58 ℄ LA HWY 318
= STA. 631+64.72 PROJ. & ADOPT ℄ US 90 SW FRONTAGE RD.

GENERAL NOTES:

1. EXISTING GROUND LINE SHOWN IN PROFILE IS DERIVED FROM A DIGITAL TERRAIN MODEL ALONG THE PROJECTED AND ADOPTED CENTERLINE.

LEGEND

- REQ'D ASPHALT PAVEMENT
- REMOVAL OF SURFACING & BASE
- REQ'D COLD PLANE & OVERLAY

T.B.M. #177
1/2" IRON ROD WITH RED PLASTIC CAP SET IN CONCRETE
STA. 631+28.22, 28.05' LT.
ELEV. 8.51' (NADV 88)

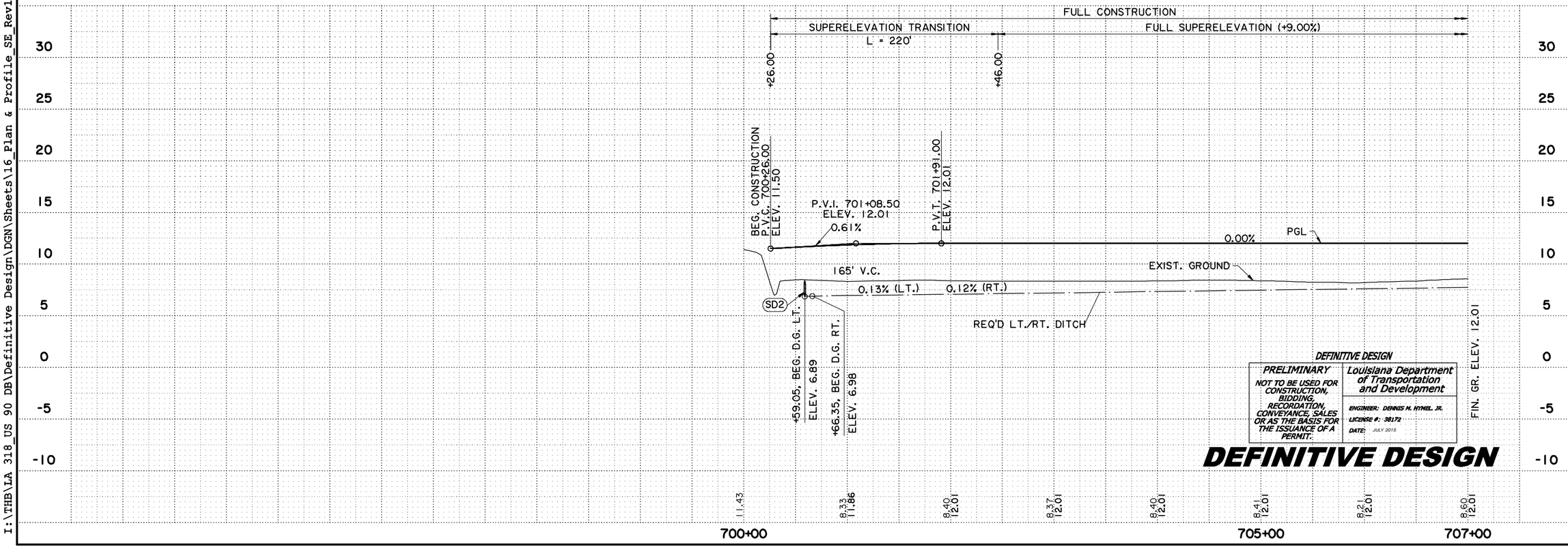

DEFINITIVE DESIGN

PRELIMINARY	Louisiana Department of Transportation and Development
NOT TO BE USED FOR CONSTRUCTION, BIDDING, RECORDATION, CONVEYANCE, SALES OR AS THE BASIS FOR THE ISSUANCE OF A PERMIT.	ENGINEER: DENNIS M. HYMEL JR. LICENSE #: 38172 DATE: JULY 2015

DEFINITIVE DESIGN

SHEET NUMBER B-42

PARISH	CONTROL SECTION	STATE PROJECT
ST. MARY	424-05, 239-31	H.004932

DESIGNED	CHECKED	DETAILED	CHECKED	SERIES NUMBER
P. OLIVIER	D. HYMEL	G. ARIAS	D. BINET	

NO.	DATE	REVISION OR CHANGE ORDER DESCRIPTION	BY

PLAN & PROFILE SHEET
SE FRONTAGE ROAD
US 90 - LA 318 INTERCHANGE

PROJ. & ADOPT ℄
CURVE DATA
P.I. STA. 707+73.86
Δ = 51°28'55"
D = 04°37'14"
T = 597.86'
L = 1114.18'
R = 1240.00'

707+00
710+00
715+00
720+00

℄ REQ'D OUTFALL DITCH LT. TO EB ON RAMP RT. DITCH

P.I. 714+90.18

EXIST. R/W

L.O.C.

STA. 715+39.13
REMOVE EXIST. SIDE DRAIN
15" X 17" RCP

REQ'D C OF A

N
Scale : 1" = 50'

REQ'D R/W

140.00'
70.00'
2@11.00'
2.00'

℄ REQ'D LT. DITCH

N76°38'24.9"E
PROJ. & ADOPT. ℄ US 90 SE FRONTAGE ROAD

CD1010

℄ REQ'D RT. DITCH

TIE EXIST. RT. DITCH TO REQ'D RT. DITCH

REMOVE EXIST. FENCE AND POSTS. (TYP.)

P.C. 715+70.24

STA. 715+43.59
CD1010 REQ'D CROSS DRAIN PIPE ARCH
(2) 36" EQ X 88 RCPA

℄ EXIST. US 90 FRONTAGE ROAD

FULL CONSTRUCTION

FULL SUPERELEVATION (+9.00%) | SUPERELEVATION TRANSITION L = 400' | FULL SUPERELEVATION (-7.60%)

+24.18 | +24.24

P.V.C. 712+15.21
ELEV. 12.01

165' V.C.

P.V.T. 713+80.21
ELEV. 12.58

P.V.C. 715+44.22
ELEV. 13.70

P.V.I. 716+26.72
ELEV. 14.27

P.V.T. 717+09.22
ELEV. 13.63

P.V.C. 718+59.22
ELEV. 12.48

165' V.C.

0.00% | 0.69% | -0.77%

PGL

EXIST. GROUND

0.13% (LT.) | 0.12% (RT.)

REQ'D LT./RT. DITCH

-0.15% | -0.20%

REQ'D RT. DITCH

CD1010

165' V.C.

0.32% (LT.) | 0.30% (RT.)

REQ'D LT. DITCH

P.V.I. 719+41.72
ELEV. 11.84

+69.53, P.I. D.G. LT.
ELEV. 8.36

+15.86, P.I. D.G. RT.
ELEV. 8.40

P.V.I. 712+97.71
ELEV. 12.01

+39.13, P.I. D.G. LT.
ELEV. 7.60 LT.

+39.13, P.I. D.G. RT.
ELEV. 7.90 RT.

F. L. LT. 7.60
F. L. RT. 7.90

FIN. GR. ELEV. 12.01

FIN. GR. ELEV. 11.98

30 25 20 15 10 5 0 -5 -10

8.60 12.01 | 8.92 12.01 | 9.28 12.01 | 9.69 12.01 | 9.97 12.01 | 9.73 12.01 | 9.83 12.16 | 10.57 12.71 | 10.75 13.40 | 11.36 13.95 | 10.33 | 10.29 12.93 | 10.30 12.21 | 10.43 11.98

DEFINITIVE DESIGN

PRELIMINARY
NOT TO BE USED FOR CONSTRUCTION, BIDDING, RECORDATION, CONVEYANCE, SALES OR AS THE BASIS FOR THE ISSUANCE OF A PERMIT.

Louisiana Department of Transportation and Development
ENGINEER: DENNIS M. HYMEL JR.
LICENSE #: 38172
DATE: JULY 2015

DEFINITIVE DESIGN

PRELIMINARY PLANS

I:\THB\LA 318_US 90 DB\Definitive Design\DGN\Sheets\17_Plan & Profile_SE_Rev1.dgn 6/30/2015 19:13

SHEET NUMBER B-43

PARISH	CONTROL SECTION	STATE PROJECT
ST. MARY	424-05, 239-31	H.004932

DESIGNED P. OLIVIER
CHECKED D. HYMEL
DETAILED G. ARIAS
CHECKED D. BINET
SERIES NUMBER

NO. | DATE | REVISION OR CHANGE ORDER DESCRIPTION | BY

PLAN & PROFILE SHEET
SE FRONTAGE ROAD
US 90 - LA 318 INTERCHANGE

PRELIMINARY PLANS

I:\THB\LA 318_US 90 DB\Definitive Design\DGN\Sheets\18_Plan & Profile_SE_Rev2.dgn 6/30/2015 19:16

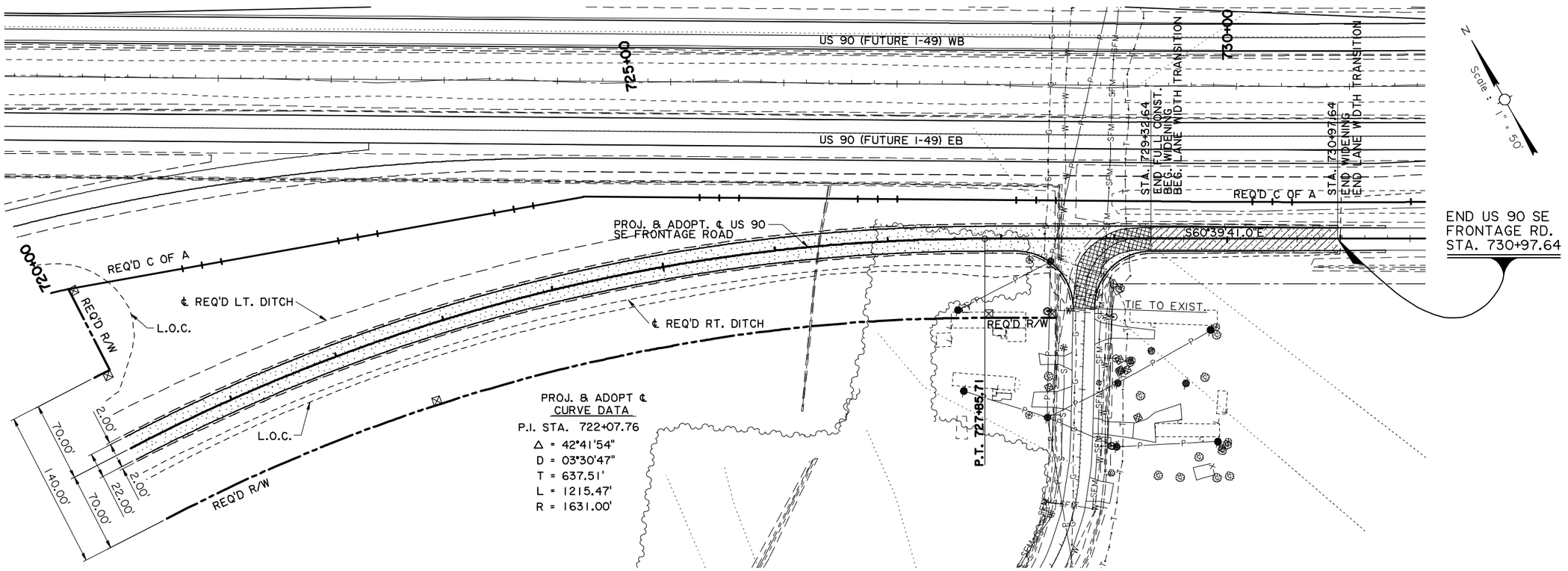

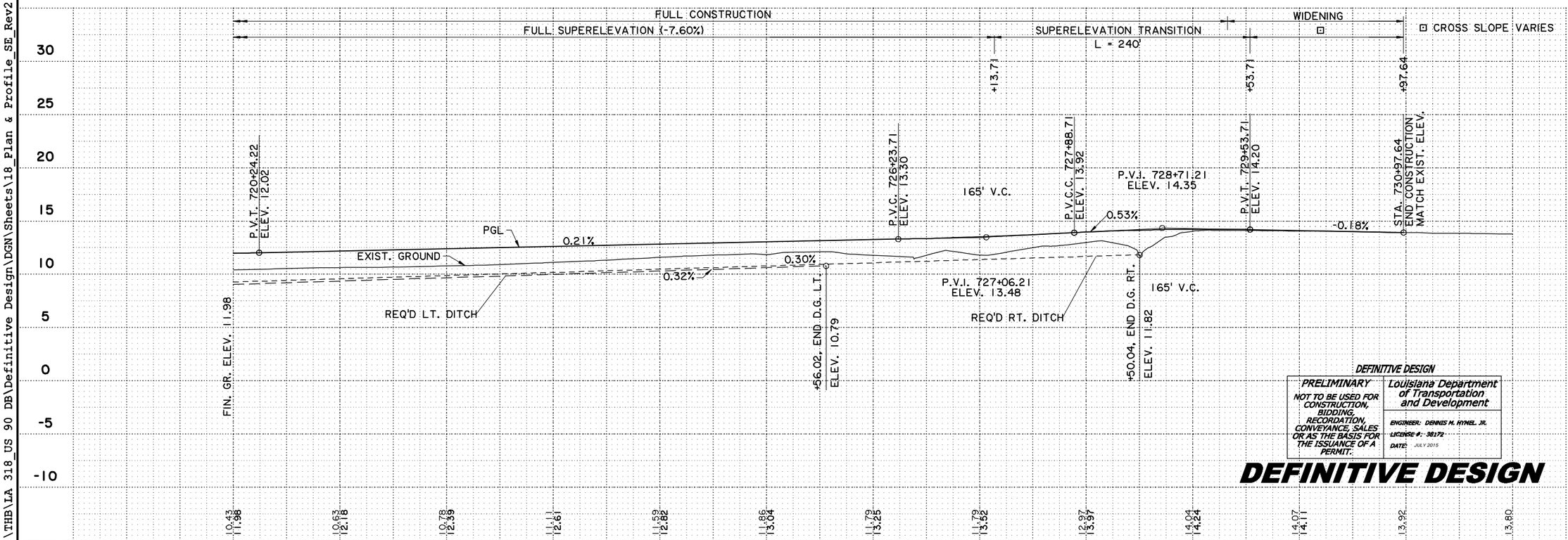

DEFINITIVE DESIGN

PRELIMINARY
NOT TO BE USED FOR CONSTRUCTION, BIDDING, RECORDATION, CONVEYANCE, SALES OR AS THE BASIS FOR THE ISSUANCE OF A PERMIT.

Louisiana Department of Transportation and Development

ENGINEER: DENNIS M. HYMEL JR.
LICENSE #: 38172
DATE: JULY 2015

DEFINITIVE DESIGN

SHEET NUMBER B-44

PARISH	CONTROL SECTION	STATE PROJECT
ST. MARY	424-05, 239-31	H.004932

DESIGNED	P. OLIVIER
CHECKED	D. HYMEL
DETAILED	G. ARIAS
CHECKED	D. BINET
SERIES NUMBER	

NO.	DATE	REVISION OR CHANGE ORDER DESCRIPTION	BY

PLAN & PROFILE SHEET
SE FRONTAGE ROAD
US 90 - LA 318 INTERCHANGE

TBS

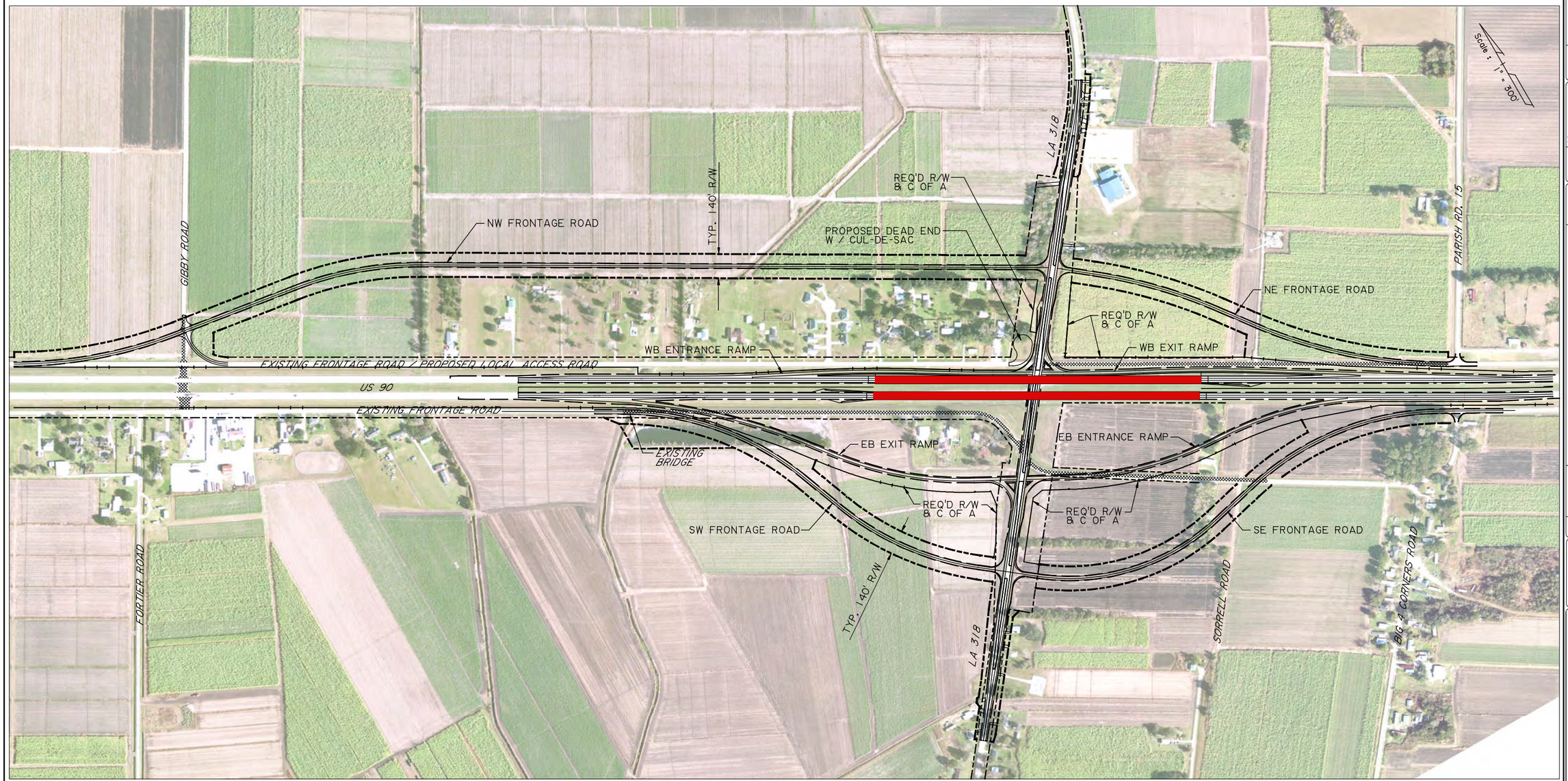

LEGEND

- REQUIRED CONTROL OF ACCESS
- EXISTING RIGHT OF WAY
- REQUIRED RIGHT OF WAY
- EXISTING FRONTAGE ROAD TO BE REMOVED
- PROPOSED BRIDGE

DEFINITIVE DESIGN

PRELIMINARY	Louisiana Department of Transportation and Development
NOT TO BE USED FOR CONSTRUCTION, BIDDING, RECORDATION, CONVEYANCE, SALES OR AS THE BASIS FOR THE ISSUANCE OF A PERMIT.	ENGINEER: JOSEPH CAINS III LICENSE #: 33670 DATE: JUNE 2015

SHEET NUMBER B-45

PARISH	CONTROL SECTION	STATE PROJECT
ST. MARY		H.004932

DESIGNED JC	DETAILED TW	SERIES NUMBER
CHECKED CMH	CHECKED JC	1 OF 4

DEFINITIVE DESIGN
DATE: 7/1/2015

NO.	DATE	REVISION OR CHANGE ORDER DESCRIPTION	BY

ATC NO. 1
OVERALL LAYOUT AND GEOMETRY
US 90 (FUTURE I-49) LA 318 INTERCHANGE

Stantec

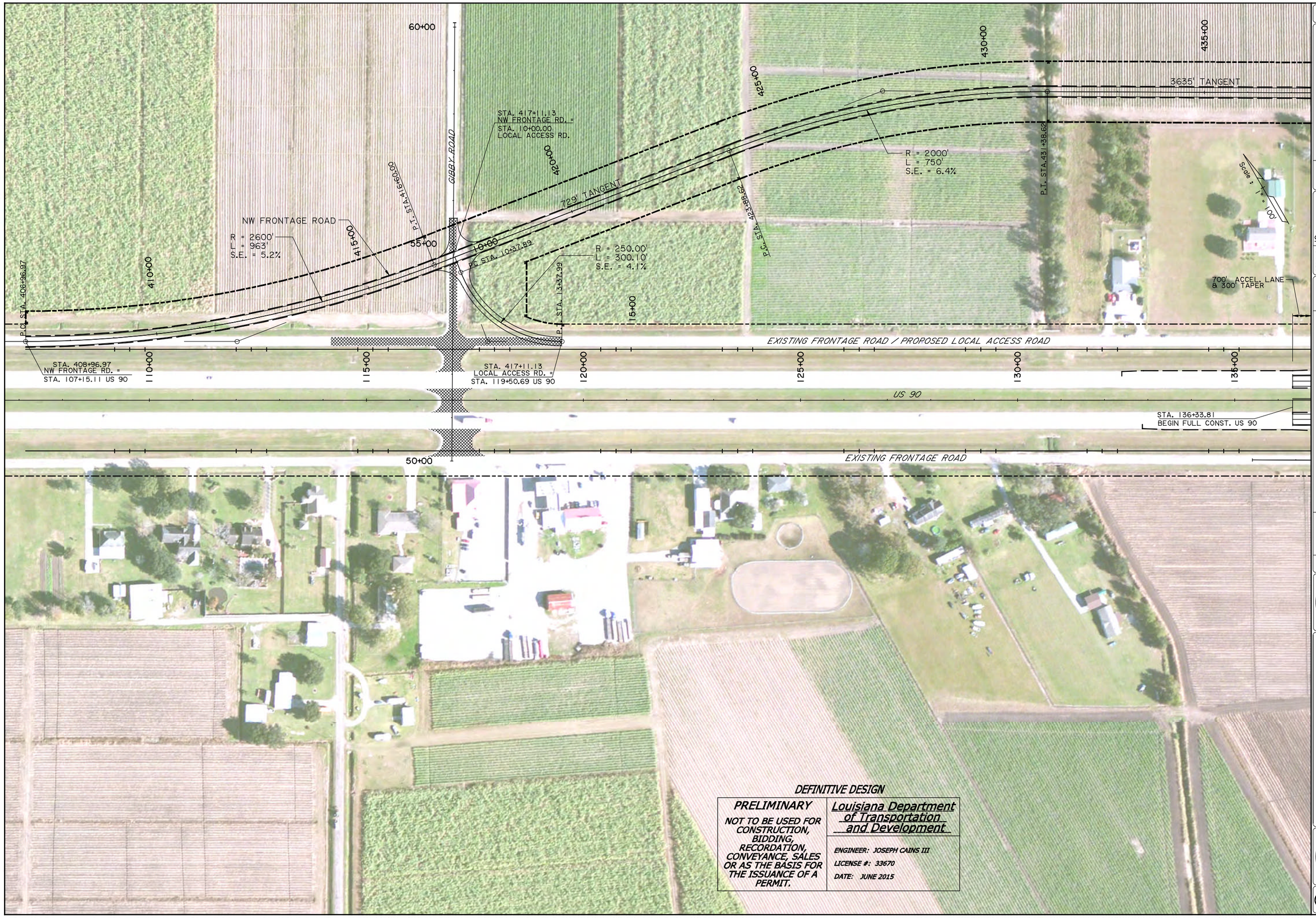

DEFINITIVE DESIGN

PRELIMINARY	Louisiana Department of Transportation and Development
NOT TO BE USED FOR CONSTRUCTION, BIDDING, RECORDATION, CONVEYANCE, SALES OR AS THE BASIS FOR THE ISSUANCE OF A PERMIT.	ENGINEER: JOSEPH CAINS III LICENSE #: 33670 DATE: JUNE 2015

SHEET NUMBER B-46

PARISH	CONTROL SECTION	STATE PROJECT
ST. MARY	424-05	H.004932

DESIGNED JC	DETAILED TW	SERIES NUMBER
CHECKED CMH	CHECKED JC	2 OF 4

DEFINITIVE DESIGN
DATE: 7/1/2015

NO.	DATE	REVISION OR CHANGE ORDER DESCRIPTION	BY

STATE OF LOUISIANA DEPARTMENT OF TRANSPORTATION AND DEVELOPMENT

ATC NO. 1
OVERALL LAYOUT AND GEOMETRY

US 90 (FUTURE I-49) LA 318 INTERCHANGE

DOTD

Stantec

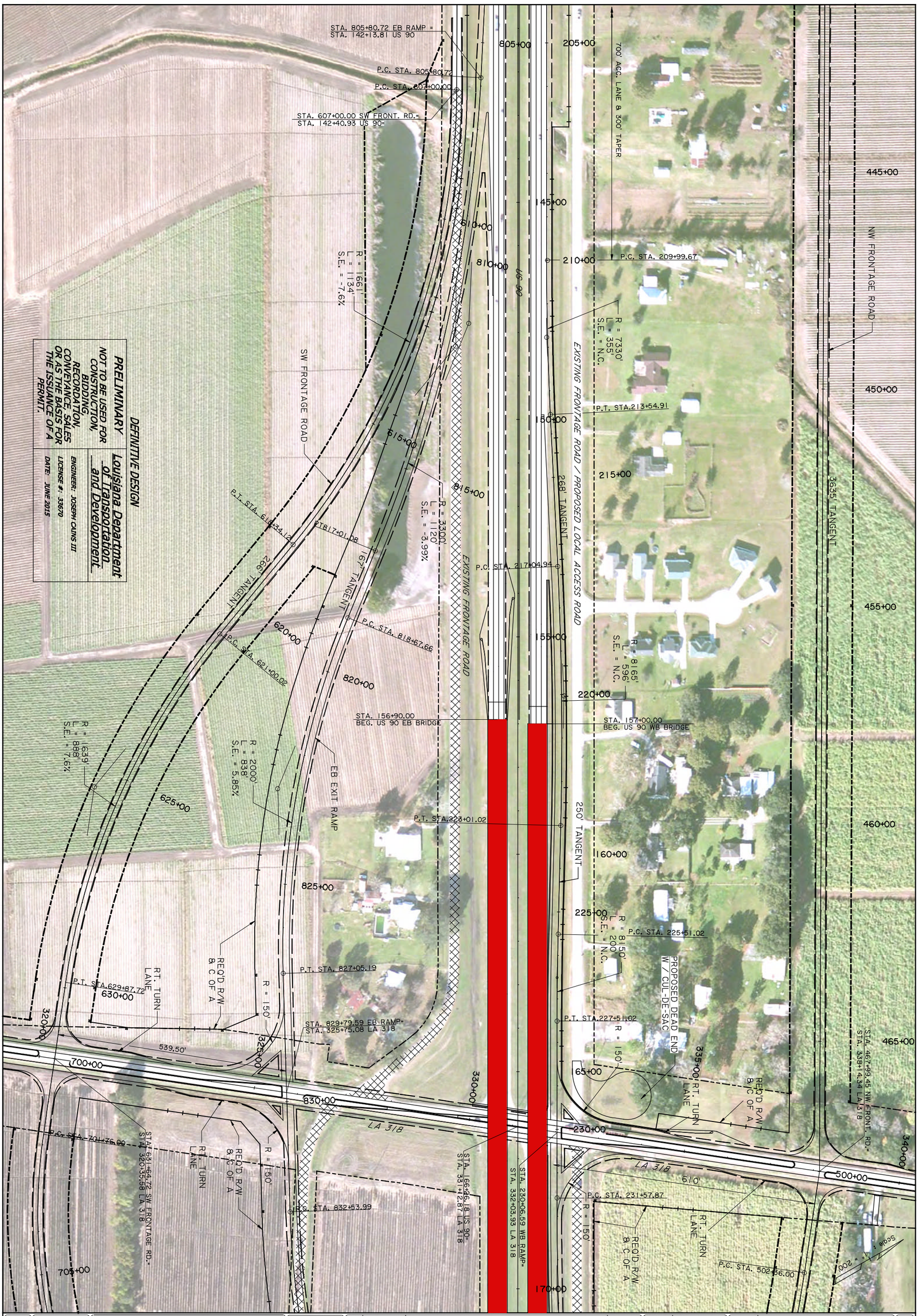

Stantec	DOTD	ATC NO. 1 OVERALL LAYOUT AND GEOMETRY	STATE OF LOUISIANA	**DEFINITIVE DESIGN** DATE: 7/1/2015	DESIGNED JC CHECKED CMH	PARISH ST. MARY
		US 90 (FUTURE I-49) LA 318 INTERCHANGE			DETAILED TW CHECKED JC	CONTROL SECTION
				NO. DATE REVISION OR CHANGE ORDER DESCRIPTION BY	SERIES NUMBER 3 OF 4	STATE PROJECT H.004932

SHEET NUMBER B-47

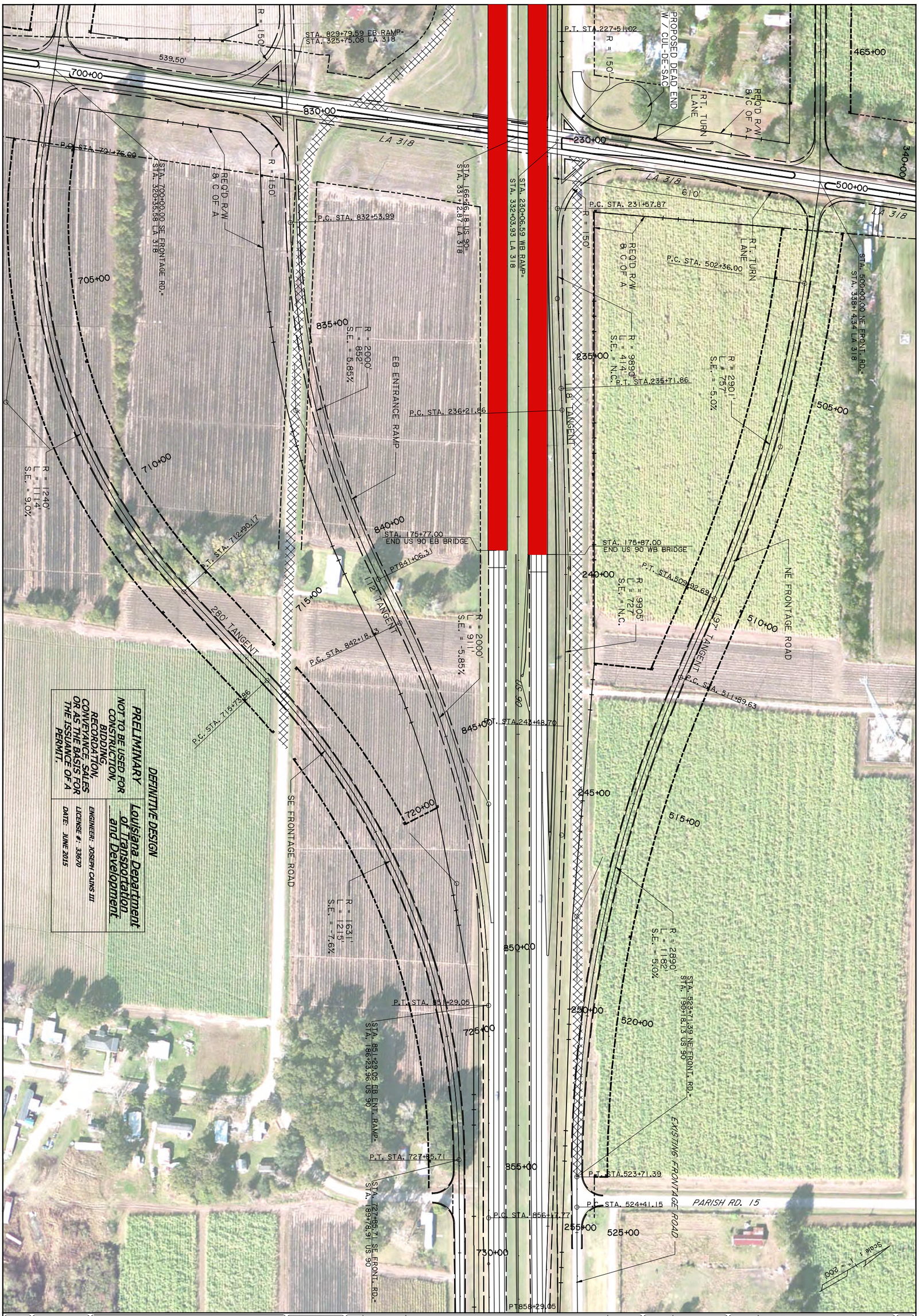

Stantec

DOTD

ATC NO. 1
OVERALL LAYOUT AND GEOMETRY

US 90 (FUTURE I-49) LA 318 INTERCHANGE

STATE OF LOUISIANA

DEFINITIVE DESIGN

DATE: 7/1/2015

NO.	DATE	REVISION OR CHANGE ORDER DESCRIPTION	BY

DESIGNED	JC	PARISH	ST. MARY
CHECKED	CMH		
DETAILED	TW	CONTROL SECTION	
CHECKED	JC		
SERIES NUMBER	4 OF 4	STATE PROJECT	H.004932

SHEET NUMBER B-48

PHASE I / STAGE I

1) ACQUIRE ROW FOR SOUTH FRONTAGE ROADS, EASTBOUND (EB) RAMPS, AND LA 318.

2) INSTALL TEMPORARY SIGNS AND BARRICADES. ERECT SILT FENCING AND OTHER STORMWATER POLUTION PREVENTION MEASURES AND MAINTAIN THESE MEASURES THROUGHOUT CONSTRUCTION.

3) EXTEND BOX CULVERT NEAR STA. 143+50 LT.

4) WHILE MAINTAINING TRAFFIC ON EXISTING US 90, BUILD WESTBOUND (WB) RAMPS WITHIN EXISTING ROW. CONSTRUCT DIVERSION PAVEMENT TO TIE THE WB RAMPS BACK TO EXISTING US 90 BEYOND LIMITS OF FULL RECONSTRUCTION AS SHOWN.

5) CONSTRUCT REQUIRED CUL-DE-SAC AND SUBSURFACE DRAINAGE WITHIN EXISTING ROW IN THE NW QUADRANT.

6) CONSTRUCT PORTION OF LA 318 FROM STA. 319+00 TO STA. 329+50, AND FROM STA. 331+70 TO STA. 343+50 WITHIN EXISTING ROW. CONSTRUCT TRAVEL LANES AND OUTSIDE SHOULDERS WHILE MAINTAINING TRAFFIC ON EXIST. ROADWAY.

PHASE I / STAGE 2

1) EXTEND BOX CULVERT AND SIDE DRAIN PIPES NEAR STA. 143+00 RT. AS SHOWN. CONSTRUCT SOUTH FRONTAGE ROAD AND EB RAMPS WITH SHOULDERS AND ACCELERATION LANE.

2) SHIFT SOUTH FRONTAGE ROAD TRAFFIC TO NEW SOUTH FRONTAGE ROAD AND OBLITERATE EXISTING FRONTAGE ROAD AS NEEDED TO CONSTRUCT THE REMAINDER OF THE EB RAMPS. CONSTRUCT DIVERSION PAVEMENT TO TIE EB RAMPS BACK TO EXISTING US 90 BEYOND LIMITS OF FULL RECONSTRUCTION AS SHOWN.

3) ONCE THE REQUIRED ROW ALONG LA 318 HAS BEEN ACQUIRED, CONSTRUCT NEW TRAVEL LANES AND OUTSIDE SHOULDERS ON LA 318 WHILE MAINTAINING TRAFFIC ON THE EXISTING ROADWAY.

4) RECONSTRUCT PORTIONS OF LA 318 SHOWN AT PROJECT ENDS IN HALVES USING FLAGGING OPERATIONS DURING OFF-PEAK PERIODS.

GENERAL NOTES:

1) CONTRACTOR MAY PROCEED WITH THE NEXT PHASE OF WORK ON LA 318 WHEN WORK SHOWN IN THIS PHASE IS COMPLETE.

2) DIVERSION PAVEMENT TYPICAL SECTION (US 90):

   8" PCC OR
   8" AC (2" SUPERPAVE WC AND 6' SUPERPAVE BINDER COURSE)
   12" CLASS II BASE
   10" TREATED SUBGRADE

3) SEE TTC-00 (A-D), TTC-01, TTC-02, TTC-03, TTC-04, TTC-05, TTC-11, TTC-17 AND TTC-18.

4) TWO PCMS SIGNS ARE REQUIRED, ONE FOR EACH DIRECTION OF US 90, 2 MILES IN ADVANCE OF THE WORK ZONE.

LEGEND

- CONSTRUCTION THIS PHASE
- DETOUR PAVEMENT CONSTRUCTION THIS PHASE
- REQUIRED RIGHT OF WAY
- EXISTING FRONTAGE ROAD TO BE REMOVED
- DIRECTION OF TRAVEL
- TEMPORARY BARRIER
- TYPE III BARRICADE

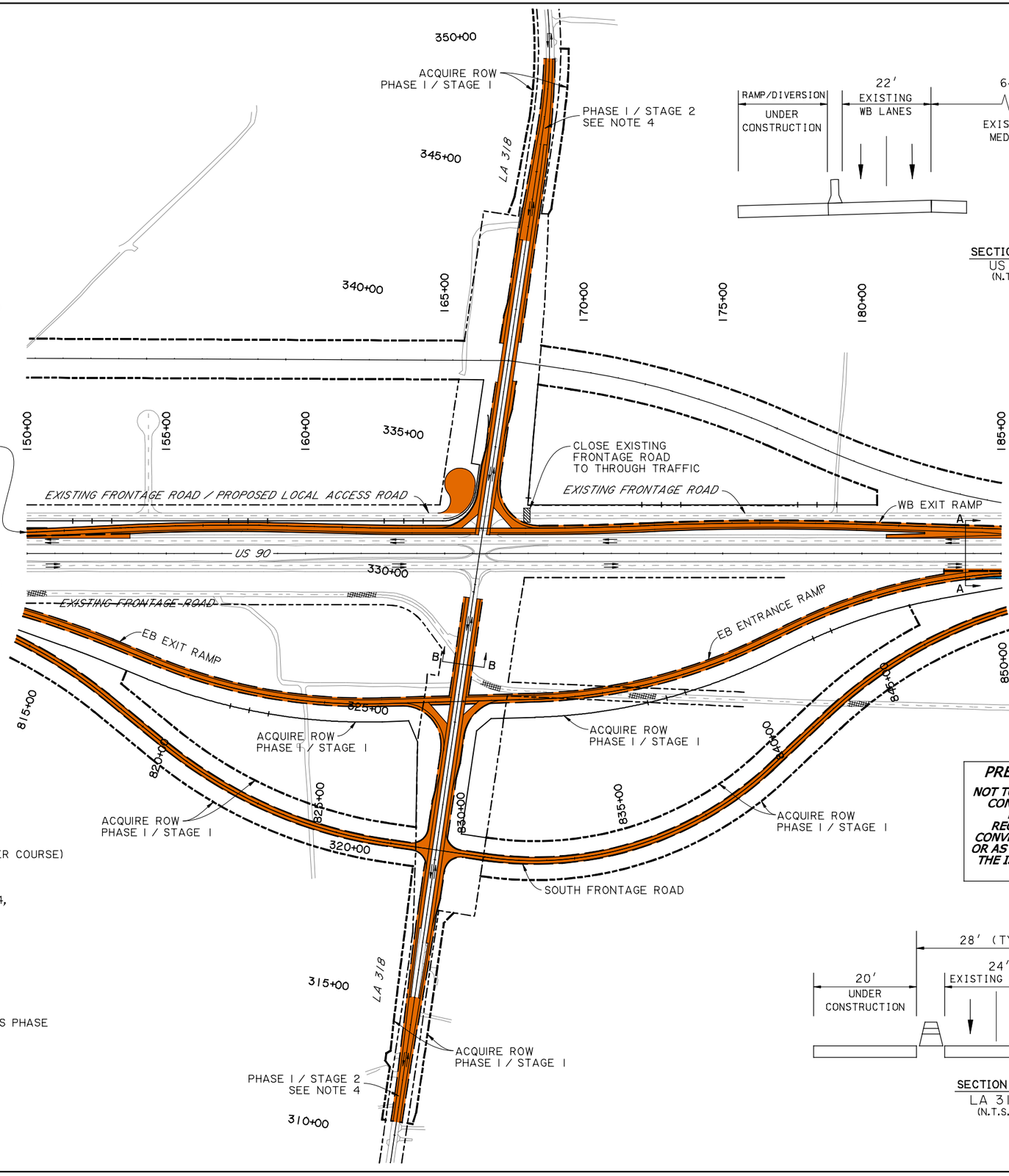

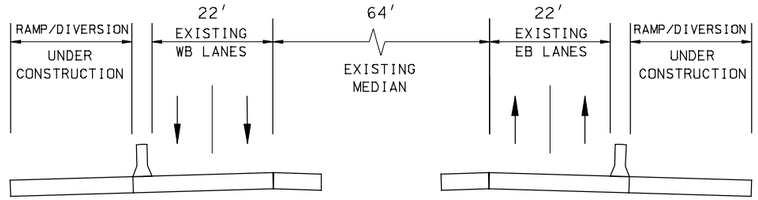

SECTION A-A
US 90
(N.T.S.)

Scale: 1" = 200'

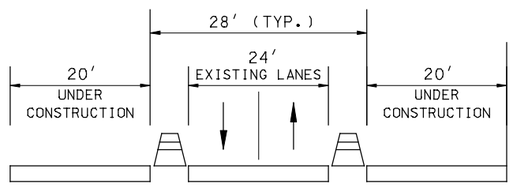

SECTION B-B
LA 318
(N.T.S.)

DEFINITIVE DESIGN

PRELIMINARY NOT TO BE USED FOR CONSTRUCTION, BIDDING, RECORDATION, CONVEYANCE, SALES OR AS THE BASIS FOR THE ISSUANCE OF A PERMIT.	*Louisiana Department of Transportation and Development*
	ENGINEER: JOSEPH CAINS III
	LICENSE #: 33670
	DATE: JUNE 2015

SHEET NUMBER A-1

PARISH: ST. MARY
CONTROL SECTION: 424-05, 239-01
STATE PROJECT: H.004932

DESIGNED JC
CHECKED CMH
DETAILED TW
CHECKED JC
SERIES NUMBER

DEFINITIVE DESIGN DATE: 7/1/2015

NO.	DATE	REVISION OR CHANGE ORDER DESCRIPTION	BY

PRELIMINARY SEQUENCE OF CONSTRUCTION PHASE I

US 90 (FUTURE I-49) LA 318 INTERCHANGE

Stantec

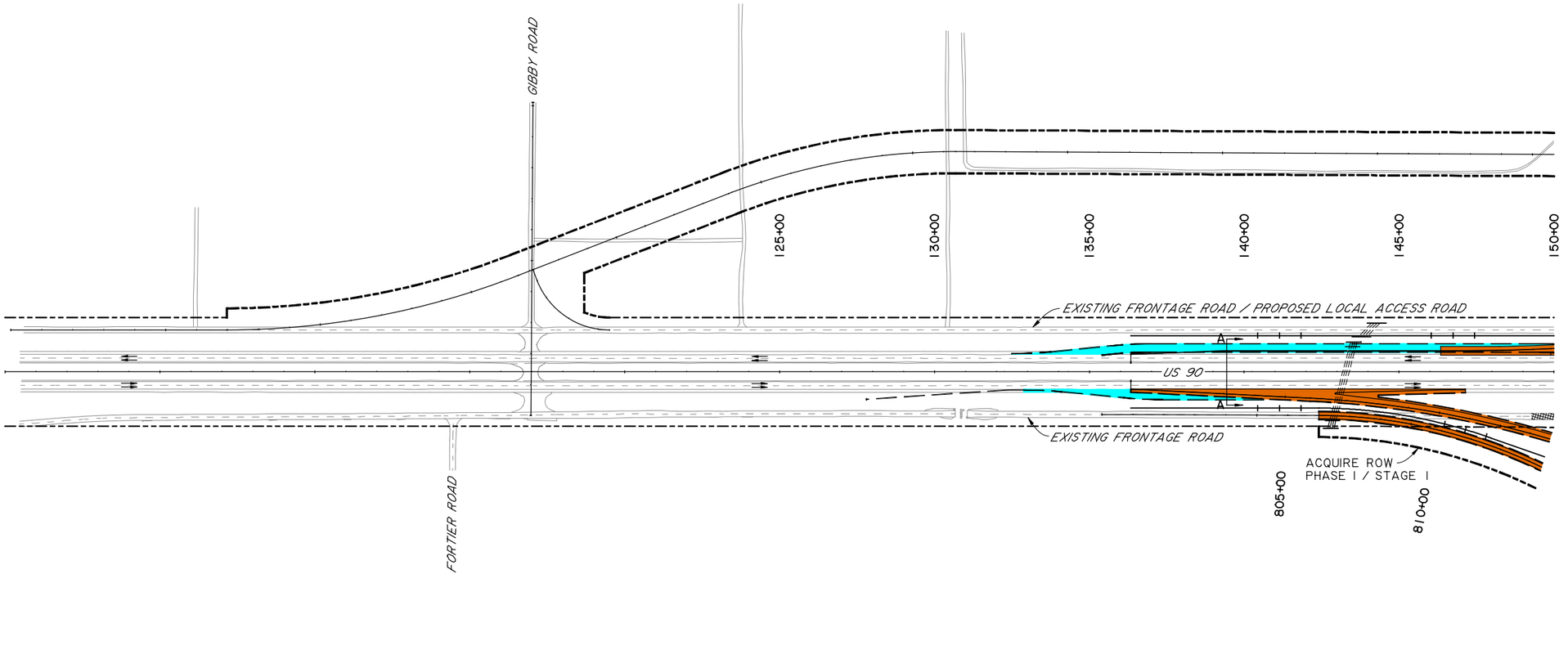

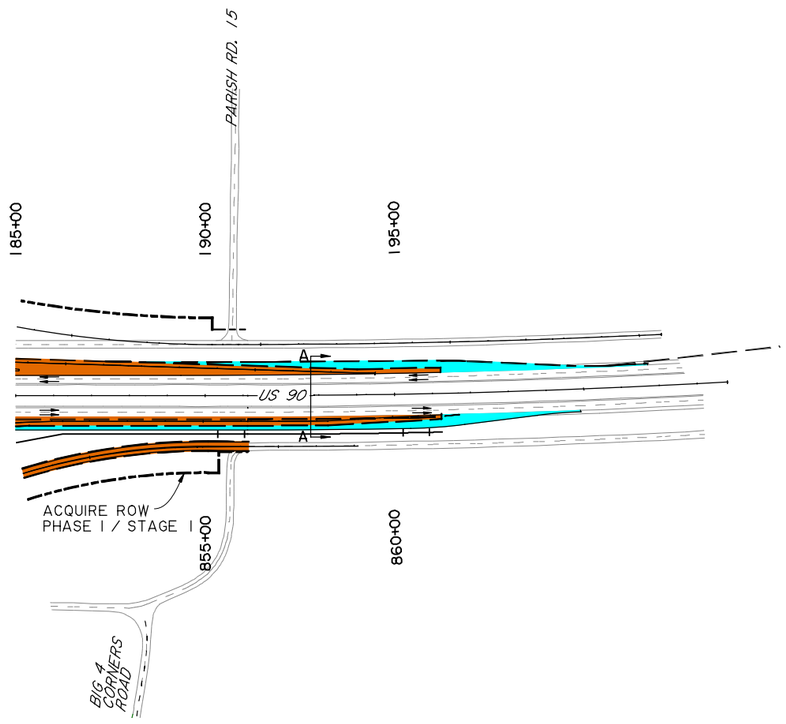

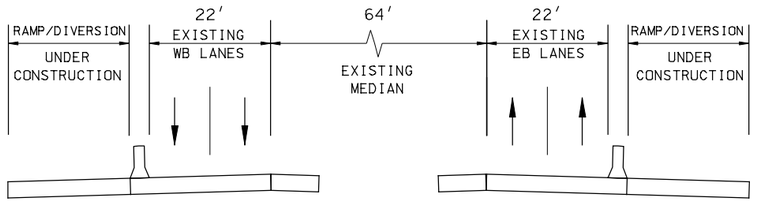

SECTION A-A
US 90
(N.T.S.)

FOR GENERAL NOTES SEE SHEET NO. A-1.

LEGEND

- CONSTRUCTION THIS PHASE
- DETOUR PAVEMENT CONSTRUCTION THIS PHASE
- REQUIRED RIGHT OF WAY
- EXISTING FRONTAGE ROAD TO BE REMOVED
- DIRECTION OF TRAVEL
- TEMPORARY BARRIER
- TYPE III BARRICADE

DEFINITIVE DESIGN

PRELIMINARY	*Louisiana Department of Transportation and Development*
NOT TO BE USED FOR CONSTRUCTION, BIDDING, RECORDATION, CONVEYANCE, SALES OR AS THE BASIS FOR THE ISSUANCE OF A PERMIT.	*ENGINEER: JOSEPH CAINS III* *LICENSE #: 33670* *DATE: JUNE 2015*

SHEET NUMBER A-2

PARISH	CONTROL SECTION	STATE PROJECT
ST. MARY	424-05	H.004932

DESIGNED	JC
CHECKED	CMH
DETAILED	TW
CHECKED	JC
SERIES NUMBER	

DEFINITIVE DESIGN DATE: 7/1/2015

NO.	DATE	REVISION OR CHANGE ORDER DESCRIPTION	BY

PRELIMINARY SEQUENCE OF CONSTRUCTION PHASE I

US 90 (FUTURE I-49) LA 318 INTERCHANGE

Stantec

PHASE II / STAGE 1

1) ACQUIRE ROW FOR NORTH FRONTAGE ROADS AND LOCAL ACCESS ROAD.

2) INSTALL ADDITIONAL TEMPORARY SIGNS AND BARRIERS AS NEEDED AND INSTALL FLASHING RED TEMPORARY SIGNALS AND STOP SIGNS ON LA 318 AT NEW INTERSECTIONS WITH US 90 EB AND WB RAMPS. SHIFT US 90 TRAFFIC TO NEWLY CONSTRUCTED EB AND WB RAMPS. REMOVE EXISTING TRAFFIC SIGNAL AT THE US 90 / LA 318 INTERSECTION.

3) CONSTRUCT NEW US 90 BRIDGES AND RECONSTRUCT MAINLINE US 90 PAVEMENT FROM STA. 136+33.80 TO STA. 196+25.

4) BUILD TRAVEL LANE AND OUTSIDE SHOULDER ON LA 318 FROM STA. 32+50 TO THE EDGE OF THE WB RAMPS. SHIFT LA 318 TRAFFIC TO NEWLY CONSTRUCTED LANES.

5) REMOVE EXISTING PAVEMENT AND ADD REQUIRED MEDIANS AND TURN LANES ON LA 318 AS SHOWN. CONSTRUCT PIER PROTECTION AT BRIDGE COLUMNS NEAR LA 318 AS REQUIRED.

PHASE II / STAGE 2

1) WHILE STILL MAINTAINING US 90 WB TRAFFIC ON THE WB RAMP THRU LA 318, SHIFT US 90 WB TRAFFIC TO NEW US 90 PAVEMENT AS SHOWN. CONSTRUCT THE REMAINDER OF THE WB ACCEL LANE AND SHOULDER TO COMPLETE THE WB ENTRANCE RAMP.

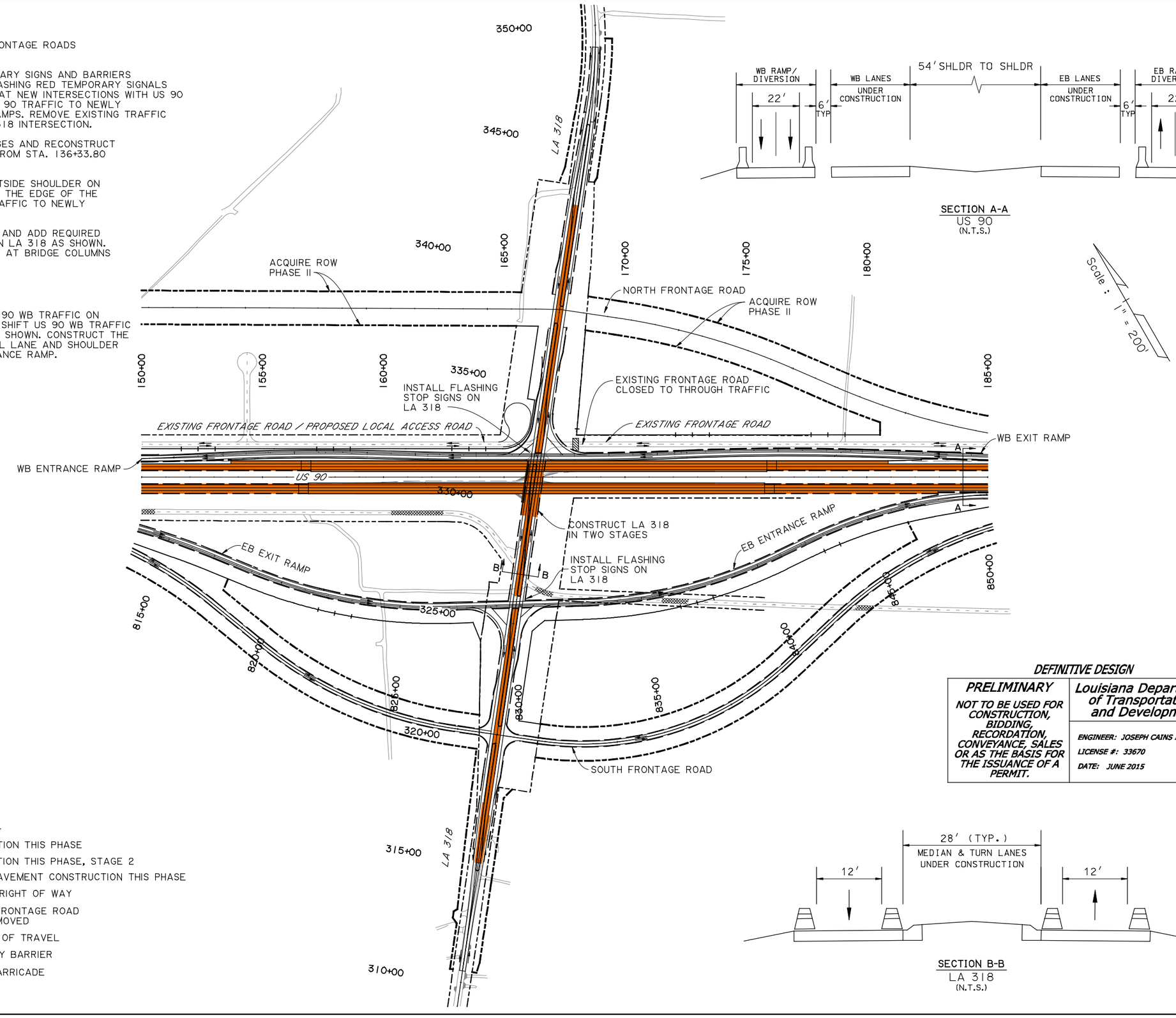

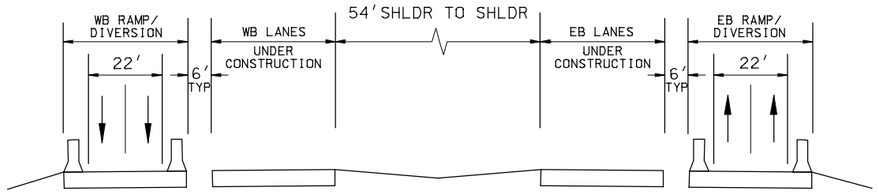

SECTION A-A
US 90
(N.T.S.)

SECTION B-B
LA 318
(N.T.S.)

FOR GENERAL NOTES SEE SHEET NO. A-1.

LEGEND

- CONSTRUCTION THIS PHASE
- CONSTRUCTION THIS PHASE, STAGE 2
- DETOUR PAVEMENT CONSTRUCTION THIS PHASE
- REQUIRED RIGHT OF WAY
- EXISTING FRONTAGE ROAD TO BE REMOVED
- DIRECTION OF TRAVEL
- TEMPORARY BARRIER
- TYPE III BARRICADE

DEFINITIVE DESIGN

PRELIMINARY	*Louisiana Department of Transportation and Development*
NOT TO BE USED FOR CONSTRUCTION, BIDDING, RECORDATION, CONVEYANCE, SALES OR AS THE BASIS FOR THE ISSUANCE OF A PERMIT.	*ENGINEER: JOSEPH CAINS III* *LICENSE #: 33670* *DATE: JUNE 2015*

SHEET NUMBER A-3

PARISH	CONTROL SECTION	STATE PROJECT
ST. MARY	424-05, 239-01	H.004932

DESIGNED JC CHECKED CMH
DETAILED TW CHECKED JC
SERIES NUMBER

DEFINITIVE DESIGN
DATE: 7/1/2015

NO.	DATE	REVISION OR CHANGE ORDER DESCRIPTION	BY

PRELIMINARY SEQUENCE OF CONSTRUCTION PHASE II

US 90 (FUTURE I-49) LA 318 INTERCHANGE

Stantec

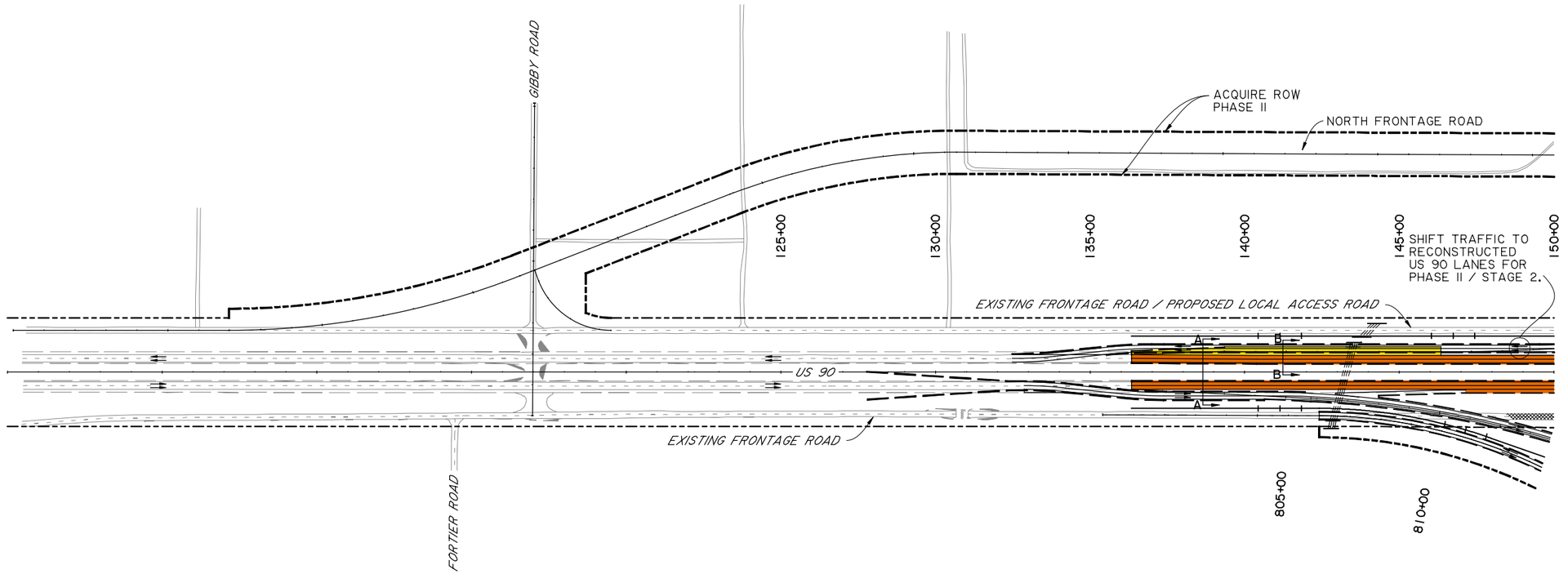

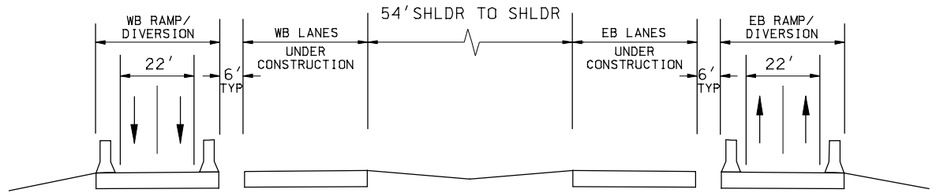

SECTION A-A
US 90
(N.T.S.)

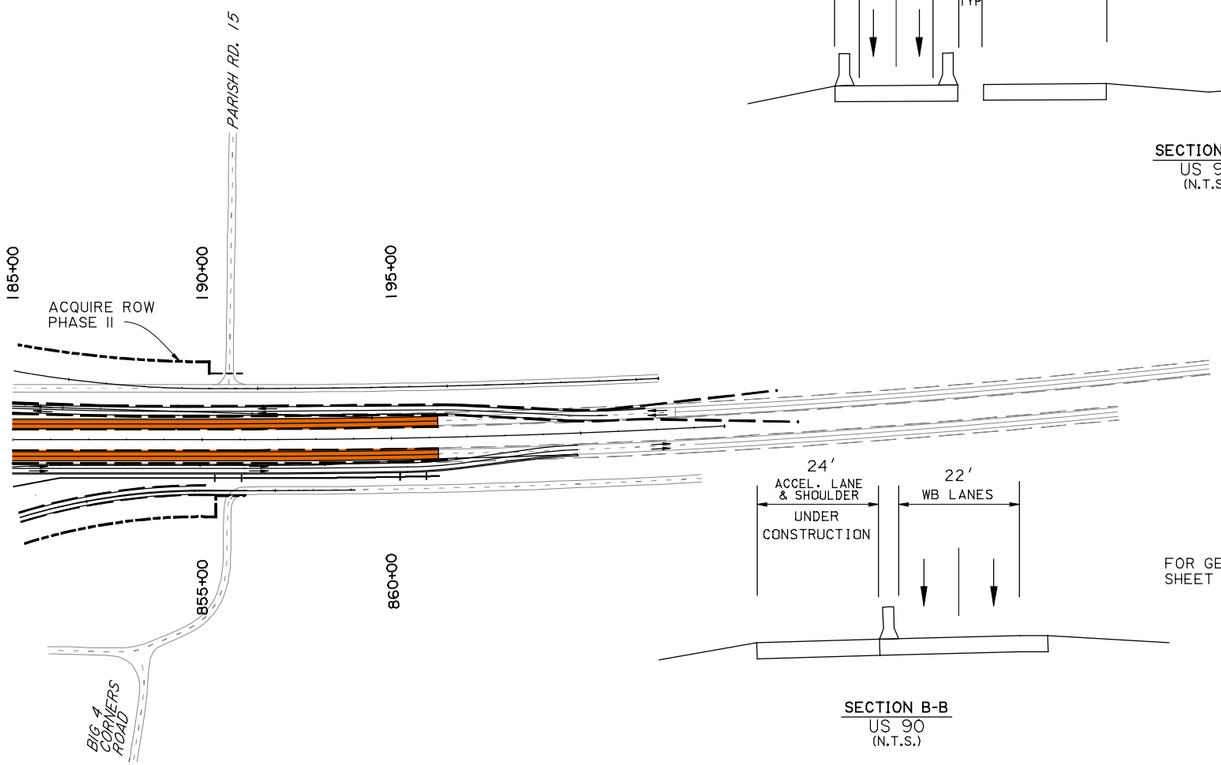

SECTION B-B
US 90
(N.T.S.)

FOR GENERAL NOTES SEE
SHEET NO. A-1.

DEFINITIVE DESIGN

PRELIMINARY	Louisiana Department of Transportation and Development
NOT TO BE USED FOR CONSTRUCTION, BIDDING, RECORDATION, CONVEYANCE, SALES OR AS THE BASIS FOR THE ISSUANCE OF A PERMIT.	ENGINEER: JOSEPH CAINS III LICENSE #: 33670 DATE: JUNE 2015

LEGEND

- CONSTRUCTION THIS PHASE
- CONSTRUCTION THIS PHASE, STAGE 2
- DETOUR PAVEMENT CONSTRUCTION THIS PHASE
- REQUIRED RIGHT OF WAY
- EXISTING FRONTAGE ROAD TO BE REMOVED
- DIRECTION OF TRAVEL
- TEMPORARY BARRIER
- TYPE III BARRICADE

SHEET NUMBER A-4

PARISH: ST. MARY
CONTROL SECTION: 424-05
STATE PROJECT: H.004932

DESIGNED JC
CHECKED CMH
DETAILED TW
CHECKED JC
SERIES
NUMBER

DEFINITIVE DESIGN
DATE: 7/1/2015

NO.	DATE	REVISION OR CHANGE ORDER DESCRIPTION	BY

PRELIMINARY SEQUENCE OF CONSTRUCTION PHASE II

US 90 (FUTURE I-49) LA 318 INTERCHANGE

Stantec

PHASE III

1) INSTALL PERMANENT SIGNS AND STRIPING ON US 90 MAINLINE.

2) SHIFT US 90 TRAFFIC TO THE NEWLY RECONSTRUCTED US 90 AND OVERPASS STRUCTURES. REMOVE ANY REMAINING TEMPORARY DETOUR TIE-INS ALONG US 90 RAMPS AND LA 318, RECONSTRUCT EXISTING SHOULDERS AS NEEDED.

3) ONCE REQUIRED R/W FOR THE NORTH FRONTAGE ROAD HAS BEEN ACQUIRED, CONSTRUCT NORTH FRONTAGE ROAD.

4) CONSTRUCT TIE-IN FROM LOCAL ACCESS ROAD TO GIBBY ROAD AND NEW NORTH FRONTAGE ROAD TIE-IN UNDER LOCAL TRAFFIC. REMOVE US 90 CROSS OVERS AT GIBBY ROAD AS SHOWN.

5) REHABILITATE LOCAL ACCESS ROAD UNDER TRAFFIC USING COLD PLANE & OVERLAY OPERATIONS AND COMPLETE ANY REMAINING WORK ITEMS.

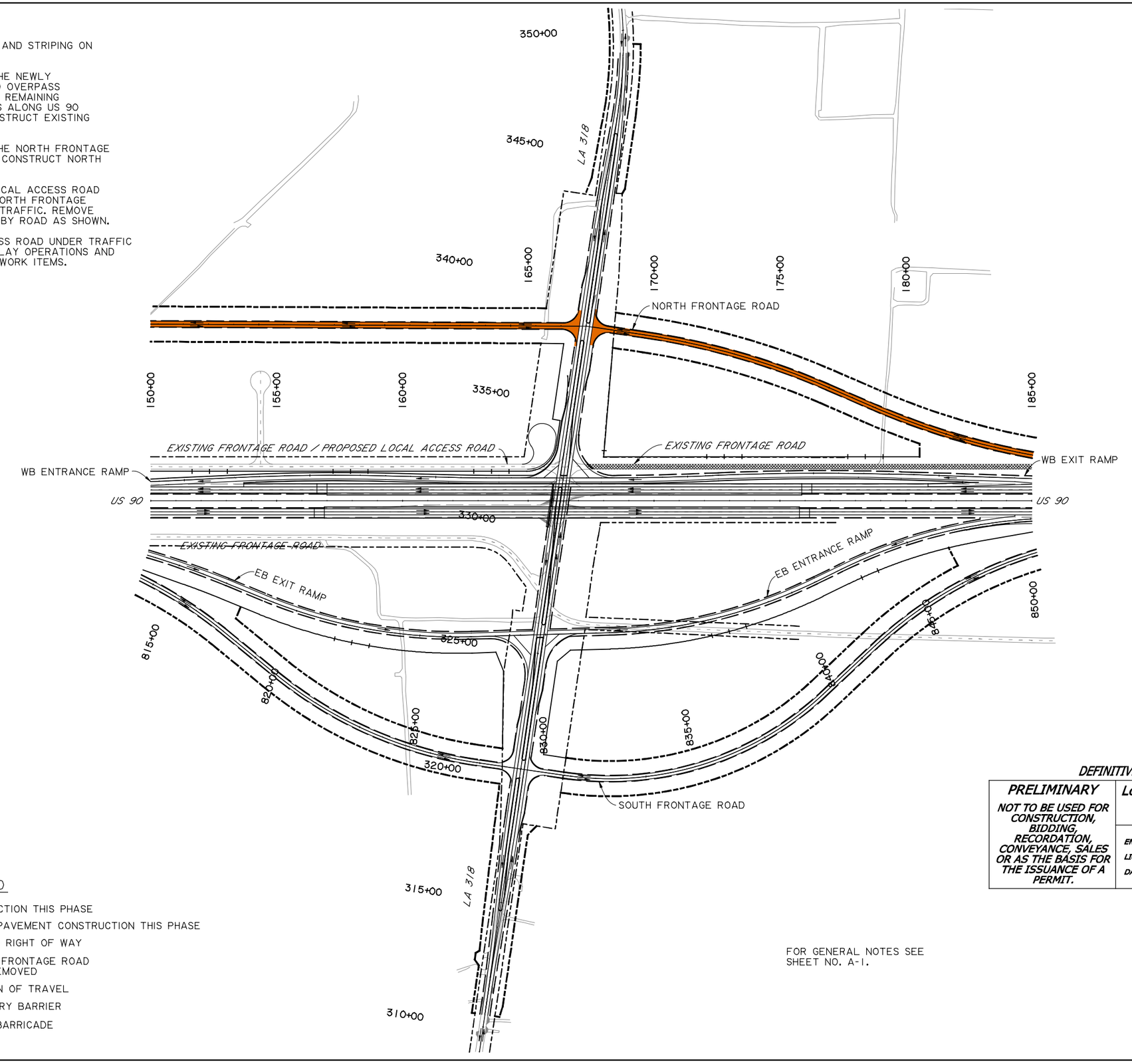

LEGEND

- CONSTRUCTION THIS PHASE
- DETOUR PAVEMENT CONSTRUCTION THIS PHASE
- REQUIRED RIGHT OF WAY
- EXISTING FRONTAGE ROAD TO BE REMOVED
- DIRECTION OF TRAVEL
- TEMPORARY BARRIER
- TYPE III BARRICADE

DEFINITIVE DESIGN

PRELIMINARY	*Louisiana Department of Transportation and Development*
NOT TO BE USED FOR CONSTRUCTION, BIDDING, RECORDATION, CONVEYANCE, SALES OR AS THE BASIS FOR THE ISSUANCE OF A PERMIT.	*ENGINEER: JOSEPH CAINS III* *LICENSE #: 33670* *DATE: JUNE 2015*

FOR GENERAL NOTES SEE SHEET NO. A-1.

SHEET NUMBER A-5

PARISH	CONTROL SECTION	STATE PROJECT
ST. MARY	424-05, 239-31	H.004932

DESIGNED JC CHECKED CMH
DETAILED TW CHECKED JC
SERIES NUMBER

DEFINITIVE DESIGN
DATE: 7/1/2015

NO.	DATE	REVISION OR CHANGE ORDER DESCRIPTION	BY

PRELIMINARY SEQUENCE OF CONSTRUCTION PHASE III

US 90 (FUTURE I-49) LA 318 INTERCHANGE

Stantec

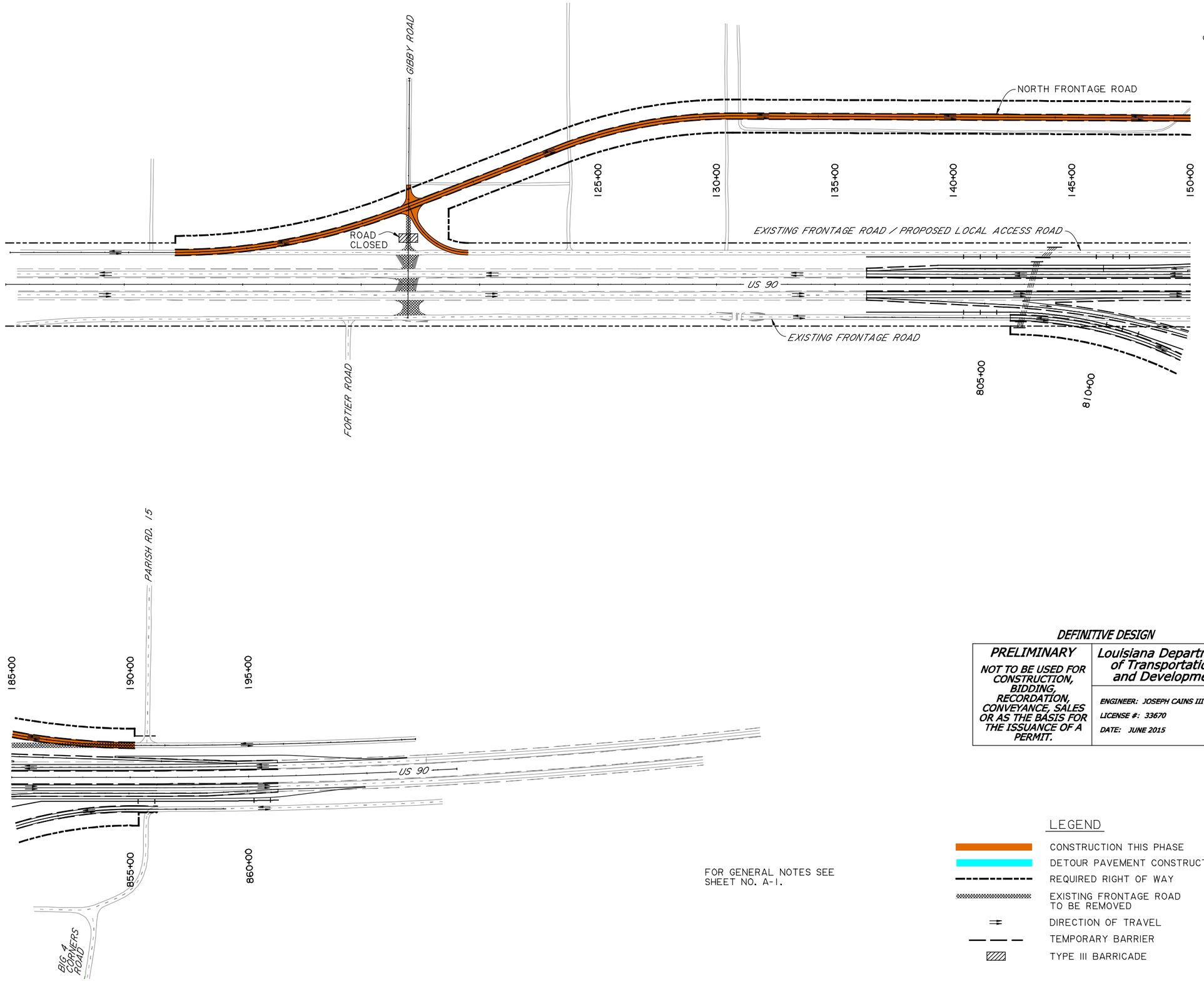

FOR GENERAL NOTES SEE SHEET NO. A-1.

DEFINITIVE DESIGN

PRELIMINARY	Louisiana Department of Transportation and Development
NOT TO BE USED FOR CONSTRUCTION, BIDDING, RECORDATION, CONVEYANCE, SALES OR AS THE BASIS FOR THE ISSUANCE OF A PERMIT.	ENGINEER: JOSEPH CAINS III LICENSE #: 33670 DATE: JUNE 2015

LEGEND

- CONSTRUCTION THIS PHASE
- DETOUR PAVEMENT CONSTRUCTION THIS PHASE
- REQUIRED RIGHT OF WAY
- EXISTING FRONTAGE ROAD TO BE REMOVED
- DIRECTION OF TRAVEL
- TEMPORARY BARRIER
- TYPE III BARRICADE

SHEET NUMBER A-6

PARISH	CONTROL SECTION	STATE PROJECT
ST. MARY	424-05	H.004932

DESIGNED JC CHECKED CMH
DETAILED TW CHECKED JC
SERIES NUMBER

DEFINITIVE DESIGN DATE: 7/1/2015

NO.	DATE	REVISION OR CHANGE ORDER DESCRIPTION	BY

PRELIMINARY SEQUENCE OF CONSTRUCTION PHASE III

US 90 (FUTURE I-49) LA 318 INTERCHANGE

Stantec

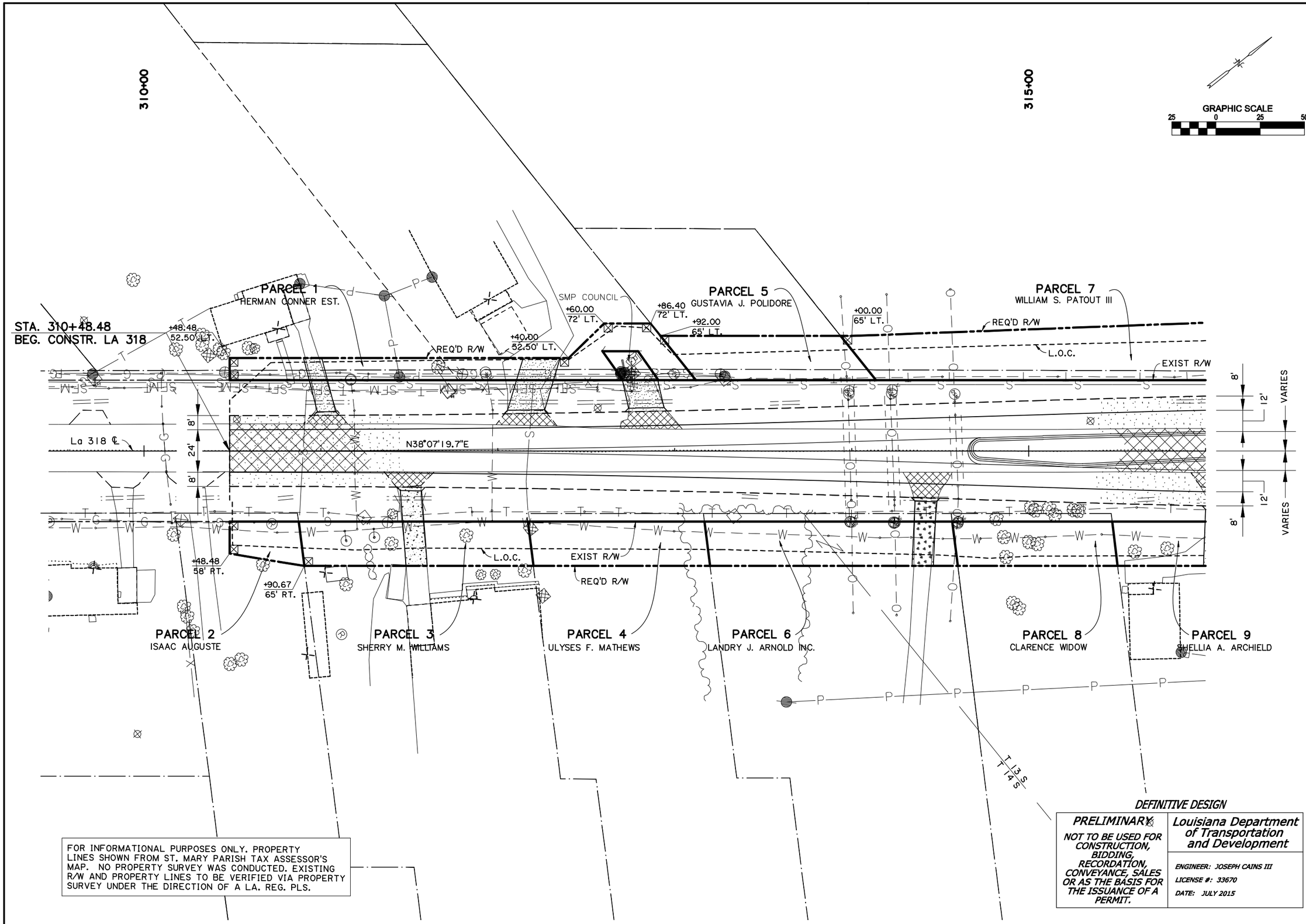

FOR INFORMATIONAL PURPOSES ONLY. PROPERTY LINES SHOWN FROM ST. MARY PARISH TAX ASSESSOR'S MAP. NO PROPERTY SURVEY WAS CONDUCTED. EXISTING R/W AND PROPERTY LINES TO BE VERIFIED VIA PROPERTY SURVEY UNDER THE DIRECTION OF A LA. REG. PLS.

DEFINITIVE DESIGN

PRELIMINARY

NOT TO BE USED FOR CONSTRUCTION, BIDDING, RECORDATION, CONVEYANCE, SALES OR AS THE BASIS FOR THE ISSUANCE OF A PERMIT.

Louisiana Department of Transportation and Development

ENGINEER: JOSEPH CAINS III

LICENSE #: 33670

DATE: JULY 2015

SHEET NUMBER: RW-1

PARISH: ST. MARY | CONTROL SECTION: 239-31 | STATE PROJECT: H.004932

DESIGNED: TH | CHECKED: CMH | DETAILED: TW | CHECKED: JC | SERIES NUMBER:

DEFINITIVE DESIGN
DATE: 7/1/2015

NO. | DATE | REVISION OR CHANGE ORDER DESCRIPTION | BY

RIGHT-OF-WAY PARCELS LA 318

US 90 (FUTURE I-49) LA 318 INTERCHANGE

Stantec

FOR INFORMATIONAL PURPOSES ONLY. PROPERTY LINES SHOWN FROM ST. MARY PARISH TAX ASSESSOR'S MAP. NO PROPERTY SURVEY WAS CONDUCTED. EXISTING R/W AND PROPERTY LINES TO BE VERIFIED VIA PROPERTY SURVEY UNDER THE DIRECTION OF A LA. REG. PLS.

PARCEL 7
WILLIAM S. PATOUT III

320+00

SOUTH FRONTAGE ROAD ℄

GRAPHIC SCALE
25 0 25 50

PARCEL 7
WILLIAM S. PATOUT III

REQ'D R/W

+91.81 LT.
TIE TO
EXIST. R/W

+5.58
95' LT.
REQ'D R/W
& C OF A

EXIST R/W &
REQ'D C OF A

PARCEL 7
WILLIAM S. PATOUT III

+00.00
80' LT.

REQ'D R/W

+48.48
80' LT.

L.O.C.

EXIST R/W

VARIES
8'
12'
12'
8'
VARIES

N38°07'19.7"E

La 318 ℄

REQ'D R/W

+80.00
65' RT.

PARCEL 11
JOSEPH A. KOURY

L.O.C.

PARCEL 9
SHELLIA A. ARCHIELD

PARCEL 10
BENJAMIN ROBINSON

TIE TO EXIST.
95' RT.

SOUTH FRONTAGE ROAD ℄

L.O.C.

+5.58
81' RT. REQ'D C OF A

EXIST R/W

EXIST R/W

PARCEL 12
JOSEPH A. KOURY

REQ'D R/W

PARCEL 12
JOSEPH A. KOURY

REQ'D R/W

DEFINITIVE DESIGN

PRELIMINARY	*Louisiana Department of Transportation and Development*
NOT TO BE USED FOR CONSTRUCTION, BIDDING, RECORDATION, CONVEYANCE, SALES OR AS THE BASIS FOR THE ISSUANCE OF A PERMIT.	*ENGINEER: JOSEPH CAINS III* *LICENSE #: 33670* *DATE: JULY 2015*

SHEET NUMBER: RW-2

PARISH	CONTROL SECTION	STATE PROJECT
ST. MARY	239-31	H.004932

DESIGNED TH
CHECKED CMH
DETAILED TW
CHECKED JC
SERIES NUMBER

DEFINITIVE DESIGN
DATE: 7/1/2015

NO.	DATE	REVISION OR CHANGE ORDER DESCRIPTION	BY

RIGHT-OF-WAY PARCELS
LA 318

US 90 (FUTURE I-49) LA 318 INTERCHANGE

Stantec

EB EXIT RAMP

PARCEL 24
ARTHUR BERGERON JR.

PARCEL 17
WILLIAM S. PATOUT III

EXIST R/W

330+00

L.O.C.

GRAPHIC SCALE
25 0 25 50

VARIES
VARIES
8'
12'
14'
12'
VARIES

N38°07'19.7"E

La 318 ℄

5.75'
12'
16'
12'
12'
8'

R/W C OF A

EB ENTRANCE RAMP

+39.37
171.87' RT.

PARCEL 28
DOROTHY G. LANDRY

L.O.C.

EXIST R/W

PARCEL 29
DOROTHY G. LANDRY

FOR INFORMATIONAL PURPOSES ONLY. PROPERTY LINES SHOWN FROM ST. MARY PARISH TAX ASSESSOR'S MAP. NO PROPERTY SURVEY WAS CONDUCTED. EXISTING R/W AND PROPERTY LINES TO BE VERIFIED VIA PROPERTY SURVEY UNDER THE DIRECTION OF A LA. REG. PLS.

DEFINITIVE DESIGN

PRELIMINARY	*Louisiana Department of Transportation and Development*
NOT TO BE USED FOR CONSTRUCTION, BIDDING, RECORDATION, CONVEYANCE, SALES OR AS THE BASIS FOR THE ISSUANCE OF A PERMIT.	*ENGINEER: JOSEPH CAINS III* *LICENSE #: 33670* *DATE: JULY 2015*

SHEET NUMBER: RW-3

PARISH	CONTROL SECTION	STATE PROJECT
ST. MARY	424-05, 239-31	H.004932

DESIGNED: TH
CHECKED: CMH
DETAILED: TW
CHECKED: JC
SERIES NUMBER:

DEFINITIVE DESIGN
DATE: 7/1/2015

NO.	DATE	REVISION OR CHANGE ORDER DESCRIPTION	BY

RIGHT-OF-WAY PARCELS
LA 318

US 90 (FUTURE I-49) LA 318 INTERCHANGE

Stantec

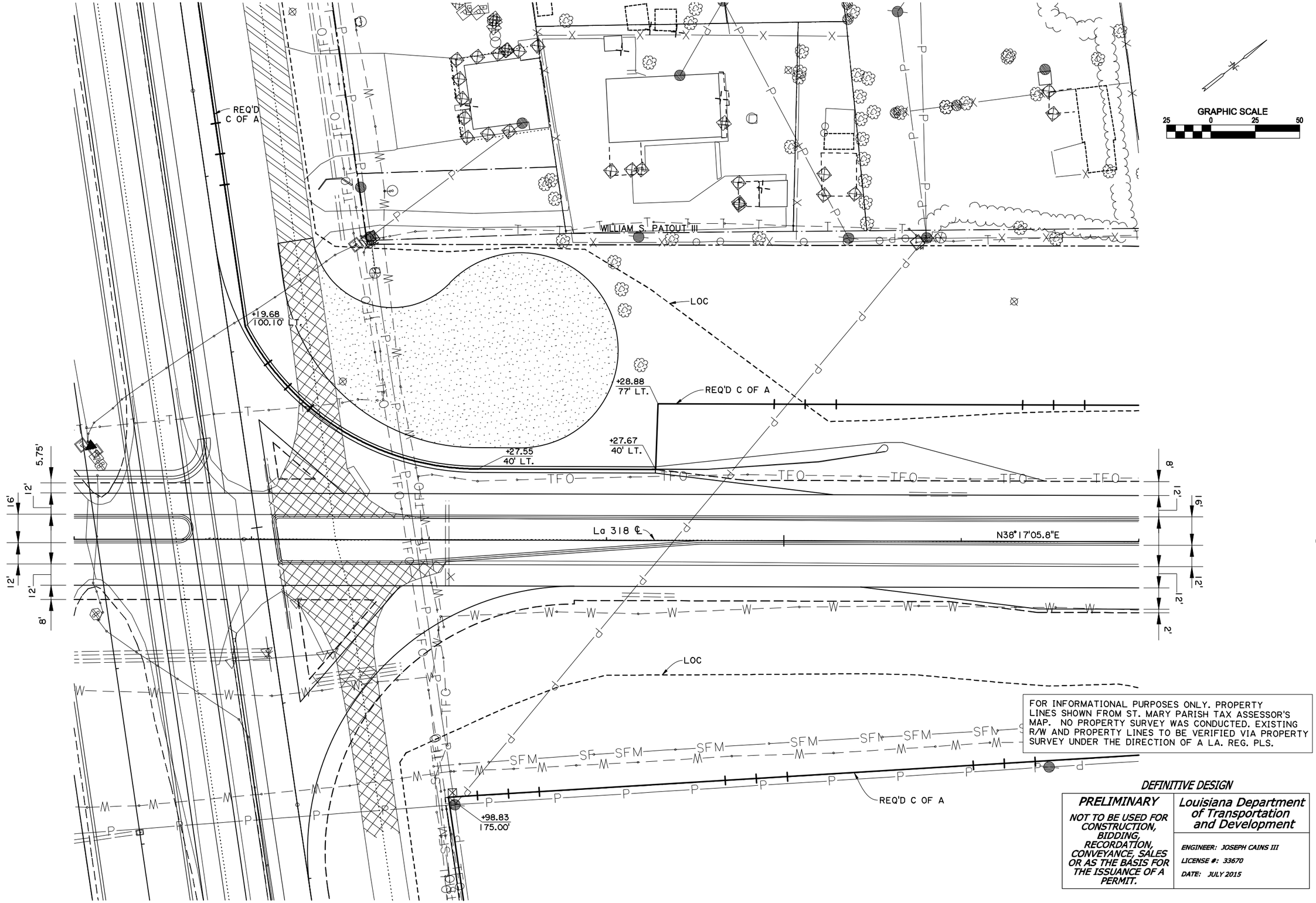

FOR INFORMATIONAL PURPOSES ONLY. PROPERTY LINES SHOWN FROM ST. MARY PARISH TAX ASSESSOR'S MAP. NO PROPERTY SURVEY WAS CONDUCTED. EXISTING R/W AND PROPERTY LINES TO BE VERIFIED VIA PROPERTY SURVEY UNDER THE DIRECTION OF A LA. REG. PLS.

DEFINITIVE DESIGN

PRELIMINARY	*Louisiana Department of Transportation and Development*
NOT TO BE USED FOR CONSTRUCTION, BIDDING, RECORDATION, CONVEYANCE, SALES OR AS THE BASIS FOR THE ISSUANCE OF A PERMIT.	*ENGINEER: JOSEPH CAINS III* *LICENSE #: 33670* *DATE: JULY 2015*

SHEET NUMBER: RW-4

PARISH	CONTROL SECTION	STATE PROJECT
ST. MARY	424-05, 239-31	H.004932

DESIGNED: TH
CHECKED: CMH
DETAILED: TW
CHECKED: JC
SERIES NUMBER:

DEFINITIVE DESIGN
DATE: 7/1/2015

NO.	DATE	REVISION OR CHANGE ORDER DESCRIPTION	BY

RIGHT-OF-WAY PARCELS
LA 318

US 90 (FUTURE I-49) LA 318 INTERCHANGE

Stantec

FOR INFORMATIONAL PURPOSES ONLY. PROPERTY LINES SHOWN FROM ST. MARY PARISH TAX ASSESSOR'S MAP. NO PROPERTY SURVEY WAS CONDUCTED. EXISTING R/W AND PROPERTY LINES TO BE VERIFIED VIA PROPERTY SURVEY UNDER THE DIRECTION OF A LA. REG. PLS.

REQ'D R/W

REQ'D R/W

NW FRONTAGE ROAD ℄

PARCEL 13
VOLMER CAROL E.
CLOSE TRUST

PARCEL 13
VOLMER CAROL E.
CLOSE TRUST

EXIST R/W

GRAPHIC SCALE
25 0 25 50

340+00

REQ'D C OF A

+32.49
77' LT.

L.O.C.

5.75'

8'
12'
16'
14'
12'
12'
2'

N38°17'05.8"E
La 318 ℄

12'
12'
8'
8'
12'
VARIES
12'
14'

L.O.C.

LOC

REQ'D C OF A

EXIST R/W

+44.34
117.56' RT.

+84.34
108.63' RT.

EXIST R/W

REQ'D R/W

REQ'D R/W

NE FRONTAGE ROAD ℄

PARCEL 14
DOROTHY G. LANDRY

PARCEL 14
DOROTHY G. LANDRY

DEFINITIVE DESIGN

PRELIMINARY	*Louisiana Department of Transportation and Development*
NOT TO BE USED FOR CONSTRUCTION, BIDDING, RECORDATION, CONVEYANCE, SALES OR AS THE BASIS FOR THE ISSUANCE OF A PERMIT.	*ENGINEER: JOSEPH CAINS III* *LICENSE #: 33670* *DATE: JULY 2015*

SHEET NUMBER: RW-5

PARISH	CONTROL SECTION	STATE PROJECT
ST. MARY	239-31	H.004932

DESIGNED: TH
CHECKED: CMH
DETAILED: TW
CHECKED: JC
SERIES NUMBER:

DEFINITIVE DESIGN
DATE: 7/1/2015

NO.	DATE	REVISION OR CHANGE ORDER DESCRIPTION	BY

RIGHT-OF-WAY PARCELS
LA 318

US 90 (FUTURE I-49) LA 318 INTERCHANGE

Stantec

FOR INFORMATIONAL PURPOSES ONLY. PROPERTY LINES SHOWN FROM ST. MARY PARISH TAX ASSESSOR'S MAP. NO PROPERTY SURVEY WAS CONDUCTED. EXISTING R/W AND PROPERTY LINES TO BE VERIFIED VIA PROPERTY SURVEY UNDER THE DIRECTION OF A LA. REG. PLS.

GRAPHIC SCALE
25 0 25 50

345+00

DEFINITIVE DESIGN

PRELIMINARY	*Louisiana Department of Transportation and Development*
NOT TO BE USED FOR CONSTRUCTION, BIDDING, RECORDATION, CONVEYANCE, SALES OR AS THE BASIS FOR THE ISSUANCE OF A PERMIT.	*ENGINEER: JOSEPH CAINS III* *LICENSE #: 33670* *DATE: JULY 2015*

P.I. STA. 350+11.66
D = 3°22'48.86"
° = 21°24'20.09"LT.
T = 320.36'
L = 633.26'
R = 1695.02'
N = 498572.9360
E = 3186848.3209

EXIST R/W
L.O.C.
PARCEL 15
VOLMER CAROL E.
CLOSE TRUST
TIE TO EXIST.
30' LT.
+00.00
65' LT.
REQ'D R/W
+91.29
54' LT.
P.C. STA. 346+91.29
VARIES
8'
12'
14'
12'
8'
TFO
La 318 ℄
N38°17'05.8"E
8'
12'
12'
8'
L.O.C.
EXIST R/W
+55.51
64.19' RT.
+75.00
72' RT.
REQ'D R/W
+65.09
72' RT.
+34.54
69' RT.
+03.05
69' RT.
PARCEL 16
S.M.P. RECREATION
DIST. NO. 5
PARCEL 17
EDWARD PATRICK JR.
PARCEL 18
BARBARA MATHEWS
PARCEL 19
BETTY JOYCE TILLMAN

SHEET NUMBER	RW-6
PARISH	ST. MARY
CONTROL SECTION	239-31
STATE PROJECT	H.004932
DESIGNED TH / CHECKED CMH	
DETAILED TW / CHECKED JC	
SERIES NUMBER	

DEFINITIVE DESIGN
DATE: 7/1/2015

NO.	DATE	REVISION OR CHANGE ORDER DESCRIPTION	BY

RIGHT-OF-WAY PARCELS
LA 318

US 90 (FUTURE I-49) LA 318 INTERCHANGE

Stantec

FOR INFORMATIONAL PURPOSES ONLY. PROPERTY LINES SHOWN FROM ST. MARY PARISH TAX ASSESSOR'S MAP. NO PROPERTY SURVEY WAS CONDUCTED. EXISTING R/W AND PROPERTY LINES TO BE VERIFIED VIA PROPERTY SURVEY UNDER THE DIRECTION OF A LA. REG. PLS.

350+00

355+00

GRAPHIC SCALE
25 0 25 50

P.I. STA. 350+11.66
△= 3°22'48.86"
° = 21°24'20.09"LT.
T = 320.36'
L = 633.26'
R = 1695.02'
N = 498572.9360
E = 3186848.3209

P.T. STA.353+24.55

+00.00
54' LT.

+00.00
40' LT.

EXIST R/W

N16°52'45.7"E

PARCEL 15
VOLMER CAROL E.
CLOSE TRUST

REQ'D R/W

L.O.C.

La 318 ℄

EXIST R/W

8'
12'
12'
8'

STA. 352+00.00
END CONSTR. LA 318

L.O.C.

REQ'D R/W

+44.38
69' RT.

PARCEL 19
BETTY JOYCE
TILLMAN

PARCEL 20
NELLA L. C.
JACKSON

VIOLA CERF

DEFINITIVE DESIGN

PRELIMINARY	*Louisiana Department of Transportation and Development*
NOT TO BE USED FOR CONSTRUCTION, BIDDING, RECORDATION, CONVEYANCE, SALES OR AS THE BASIS FOR THE ISSUANCE OF A PERMIT.	*ENGINEER: JOSEPH CAINS III* *LICENSE #: 33670* *DATE: JULY 2015*

SHEET NUMBER: RW-7

PARISH	CONTROL SECTION	STATE PROJECT
ST. MARY	239-31	H.004932

DESIGNED: TH
CHECKED: CMH
DETAILED: TW
CHECKED: JC
SERIES NUMBER:

DEFINITIVE DESIGN
DATE: 7/1/2015

NO.	DATE	REVISION OR CHANGE ORDER DESCRIPTION	BY

RIGHT-OF-WAY PARCELS
LA 318

US 90 (FUTURE I-49) LA 318 INTERCHANGE

Stantec

FOR INFORMATIONAL PURPOSES ONLY. PROPERTY LINES SHOWN FROM ST. MARY PARISH TAX ASSESSOR'S MAP. NO PROPERTY SURVEY WAS CONDUCTED. EXISTING R/W AND PROPERTY LINES TO BE VERIFIED VIA PROPERTY SURVEY UNDER THE DIRECTION OF A LA. REG. PLS.

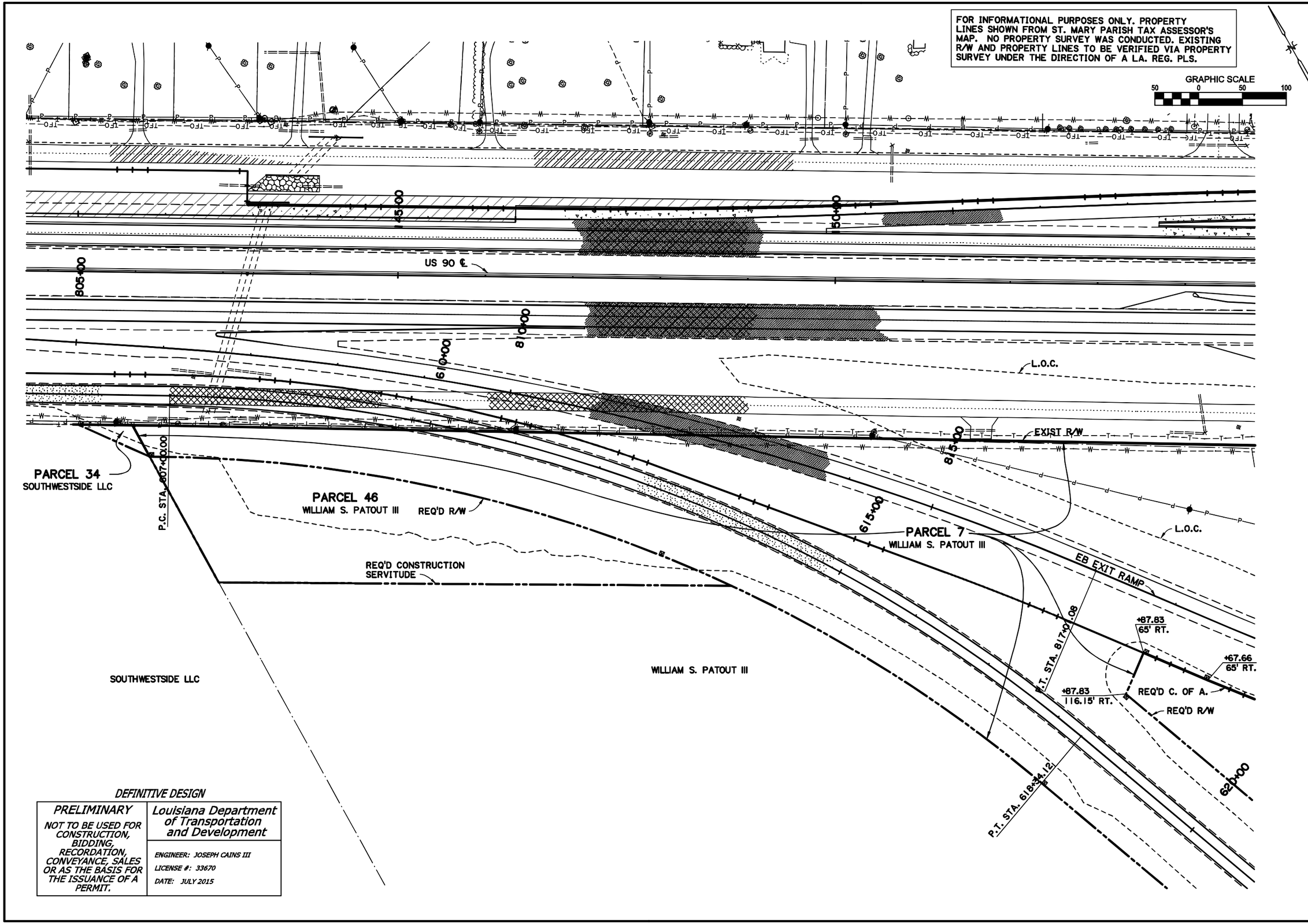

DEFINITIVE DESIGN

PRELIMINARY	*Louisiana Department of Transportation and Development*
NOT TO BE USED FOR CONSTRUCTION, BIDDING, RECORDATION, CONVEYANCE, SALES OR AS THE BASIS FOR THE ISSUANCE OF A PERMIT.	*ENGINEER: JOSEPH CAINS III* *LICENSE #: 33670* *DATE: JULY 2015*

SHEET NUMBER RW-8

PARISH ST. MARY
CONTROL SECTION 424-05
STATE PROJECT H.004932

DESIGNED TH
CHECKED CMH
DETAILED TW
CHECKED JC
SERIES NUMBER

DEFINITIVE DESIGN
DATE: 7/1/2015

NO. DATE REVISION OR CHANGE ORDER DESCRIPTION BY

RIGHT-OF-WAY PARCELS
EB RAMPS

US 90 (FUTURE I-49) LA 318 INTERCHANGE

Stantec

FOR INFORMATIONAL PURPOSES ONLY. PROPERTY LINES SHOWN FROM ST. MARY PARISH TAX ASSESSOR'S MAP. NO PROPERTY SURVEY WAS CONDUCTED. EXISTING R/W AND PROPERTY LINES TO BE VERIFIED VIA PROPERTY SURVEY UNDER THE DIRECTION OF A LA. REG. PLS.

DEFINITIVE DESIGN

PRELIMINARY	*Louisiana Department of Transportation and Development*
NOT TO BE USED FOR CONSTRUCTION, BIDDING, RECORDATION, CONVEYANCE, SALES OR AS THE BASIS FOR THE ISSUANCE OF A PERMIT.	*ENGINEER: JOSEPH CAINS III* *LICENSE #: 33670* *DATE: JULY 2015*

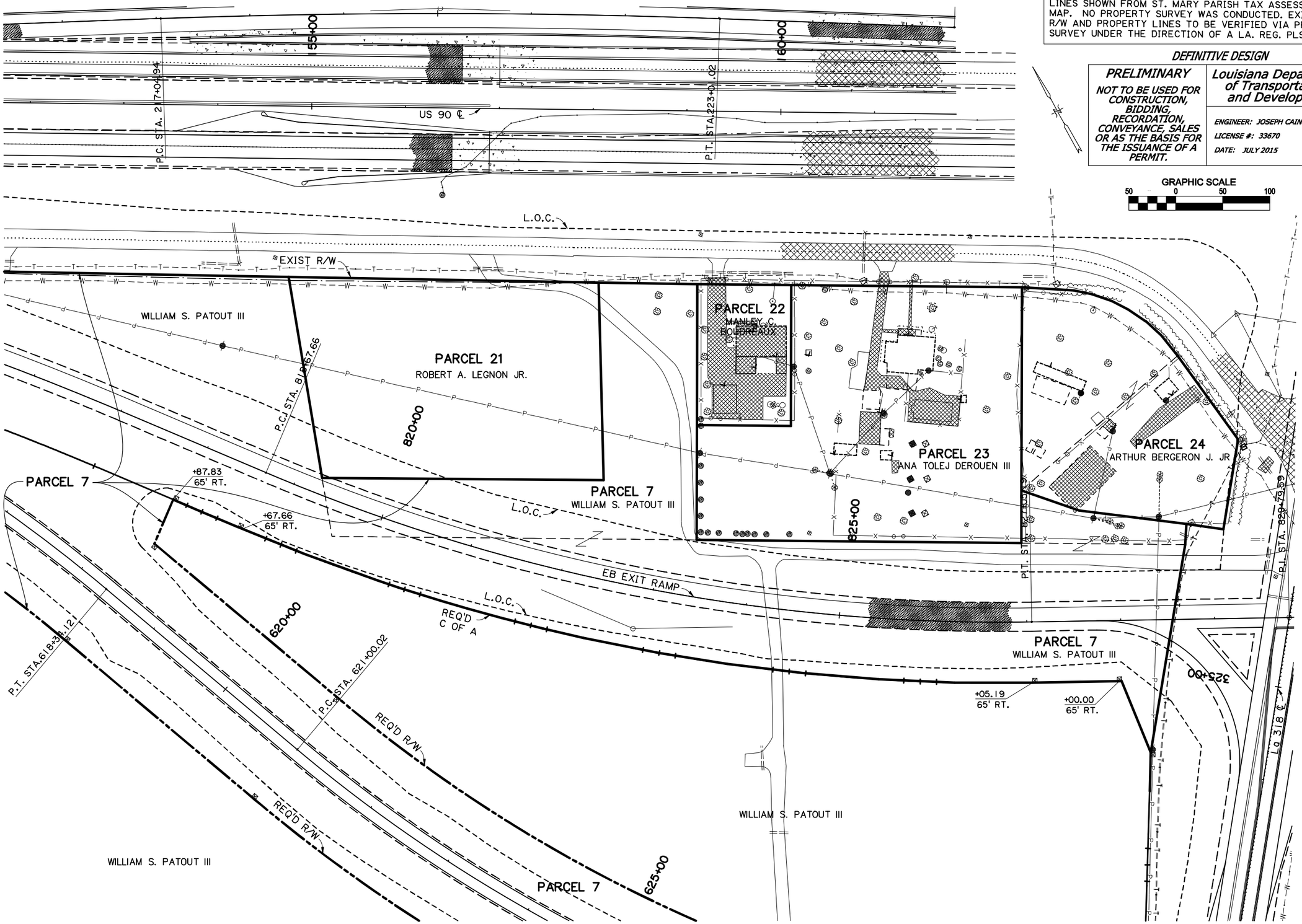

SHEET NUMBER RW-9

PARISH ST. MARY

CONTROL SECTION 424-05, 239-31

STATE PROJECT H.004932

DESIGNED TH
CHECKED CMH
DETAILED TW
CHECKED JC
SERIES NUMBER

DEFINITIVE DESIGN

DATE: 7/1/2015

NO.	DATE	REVISION OR CHANGE ORDER DESCRIPTION	BY

RIGHT-OF-WAY PARCELS EB RAMPS

US 90 (FUTURE I-49) LA 318 INTERCHANGE

Stantec

GRAPHIC SCALE
50 0 50 100

FOR INFORMATIONAL PURPOSES ONLY. PROPERTY LINES SHOWN FROM ST. MARY PARISH TAX ASSESSOR'S MAP. NO PROPERTY SURVEY WAS CONDUCTED. EXISTING R/W AND PROPERTY LINES TO BE VERIFIED VIA PROPERTY SURVEY UNDER THE DIRECTION OF A LA. REG. PLS.

DEFINITIVE DESIGN

PRELIMINARY	*Louisiana Department of Transportation and Development*
NOT TO BE USED FOR CONSTRUCTION, BIDDING, RECORDATION, CONVEYANCE, SALES OR AS THE BASIS FOR THE ISSUANCE OF A PERMIT.	*ENGINEER: JOSEPH CAINS III* *LICENSE #: 33670* *DATE: JULY 2015*

LA 318 ℄
230+00
P.C. STA. 231+57.87
235+00
P.T. STA.235+71.86
240+00
US 90 ℄
P.T. STA. 337+96.58
170+00
175+00
P.C. STA. 236+41.86
P.T. STA 243+48.70
EXIST R/W
845+00
L.O.C.
PARCEL 26
DOROTHY G. LANDRY
PARCEL 28
UNKNOWN
PARCEL 29
CELESTE TRIMBLE EST.
PARCEL 27
SAM WARE JR.
P.C. STA. 841+06.31
840+00
+18.13
65' RT.
P.C. STA. 841+18.13
+06.31
65' RT.
835+00
P.C. STA. 832+53.99
EXIST R/W
L.O.C.
EB ENTRANCE RAMP
L.O.C.
EXIST R/W
BIG 4 CORNERS ROAD
(EXISTING FRONTAGE ROAD)
PARCEL 25
DOROTHY G. LANDRY
EXIST R/W
PARCEL 29
CELESTE TRIMBLE EST.
+42.62
65' RT.
+53.99
65' RT.
DOROTHY G. LANDRY
PARCEL 32
PARCEL 31
GAYNELL H. SONNIER
P.C. STA. 715+10.28

SHEET NUMBER RW-10
PARISH ST. MARY
CONTROL SECTION 424-05, 239-31
STATE PROJECT H.004932
DESIGNED TH
CHECKED CMH
DETAILED TW
CHECKED JC
SERIES
NUMBER

DEFINITIVE DESIGN
DATE: 7/1/2015

NO.	DATE	REVISION OR CHANGE ORDER DESCRIPTION	BY

STATE OF LOUISIANA
JOSEPH CAINS III
33670
REGISTERED PROFESSIONAL ENGINEER

RIGHT-OF-WAY PARCELS EB RAMPS

US 90 (FUTURE I-49) LA 318 INTERCHANGE

DEPARTMENT OF TRANSPORTATION AND DEVELOPMENT
DOTD

Stantec

FOR INFORMATIONAL PURPOSES ONLY. PROPERTY LINES SHOWN FROM ST. MARY PARISH TAX ASSESSOR'S MAP. NO PROPERTY SURVEY WAS CONDUCTED. EXISTING R/W AND PROPERTY LINES TO BE VERIFIED VIA PROPERTY SURVEY UNDER THE DIRECTION OF A LA. REG. PLS.

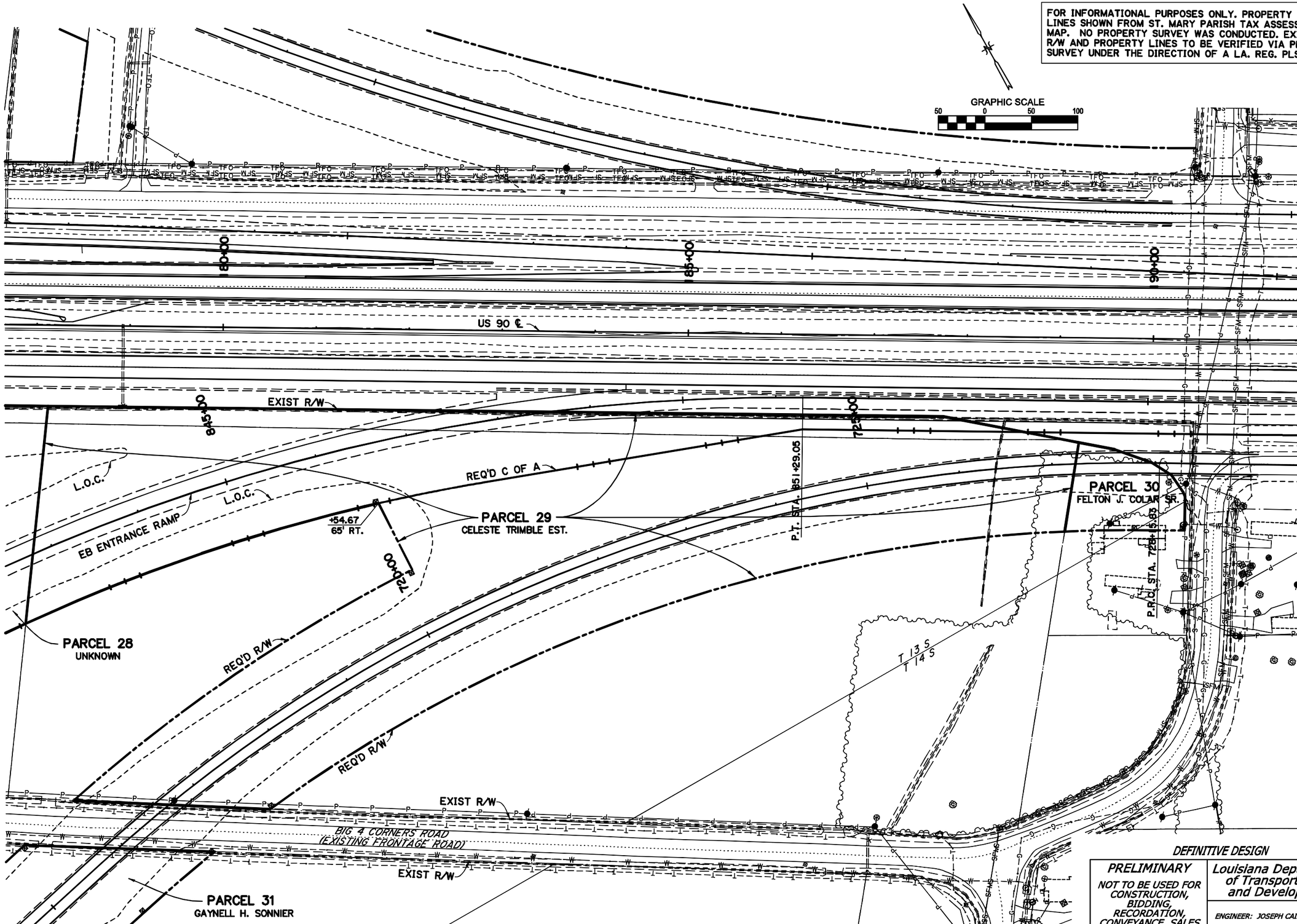

DEFINITIVE DESIGN

PRELIMINARY	Louisiana Department of Transportation and Development
NOT TO BE USED FOR CONSTRUCTION, BIDDING, RECORDATION, CONVEYANCE, SALES OR AS THE BASIS FOR THE ISSUANCE OF A PERMIT.	ENGINEER: JOSEPH CAINS III LICENSE #: 33670 DATE: JULY 2015

SHEET NUMBER RW-11

PARISH ST. MARY
CONTROL SECTION 424-05
STATE PROJECT H.004932

DESIGNED TH
CHECKED CMH
DETAILED TW
CHECKED JC
SERIES NUMBER

DEFINITIVE DESIGN
DATE: 7/1/2015

NO. DATE REVISION OR CHANGE ORDER DESCRIPTION BY

RIGHT-OF-WAY PARCELS
EB RAMPS

US 90 (FUTURE I-49) LA 318 INTERCHANGE

Stantec

6/30/2015 18:45

PRELIMINARY PLANS

I:\THB\LA 318_US 90 DB\Definitive Design\DGN\Sheets\ROW Exhibits\04_ROW_NW.dgn

LEGEND

- REQ'D ASPHALT PAVEMENT
- REMOVAL OF SURFACING & BASE
- REMOVAL OF ASPHALT

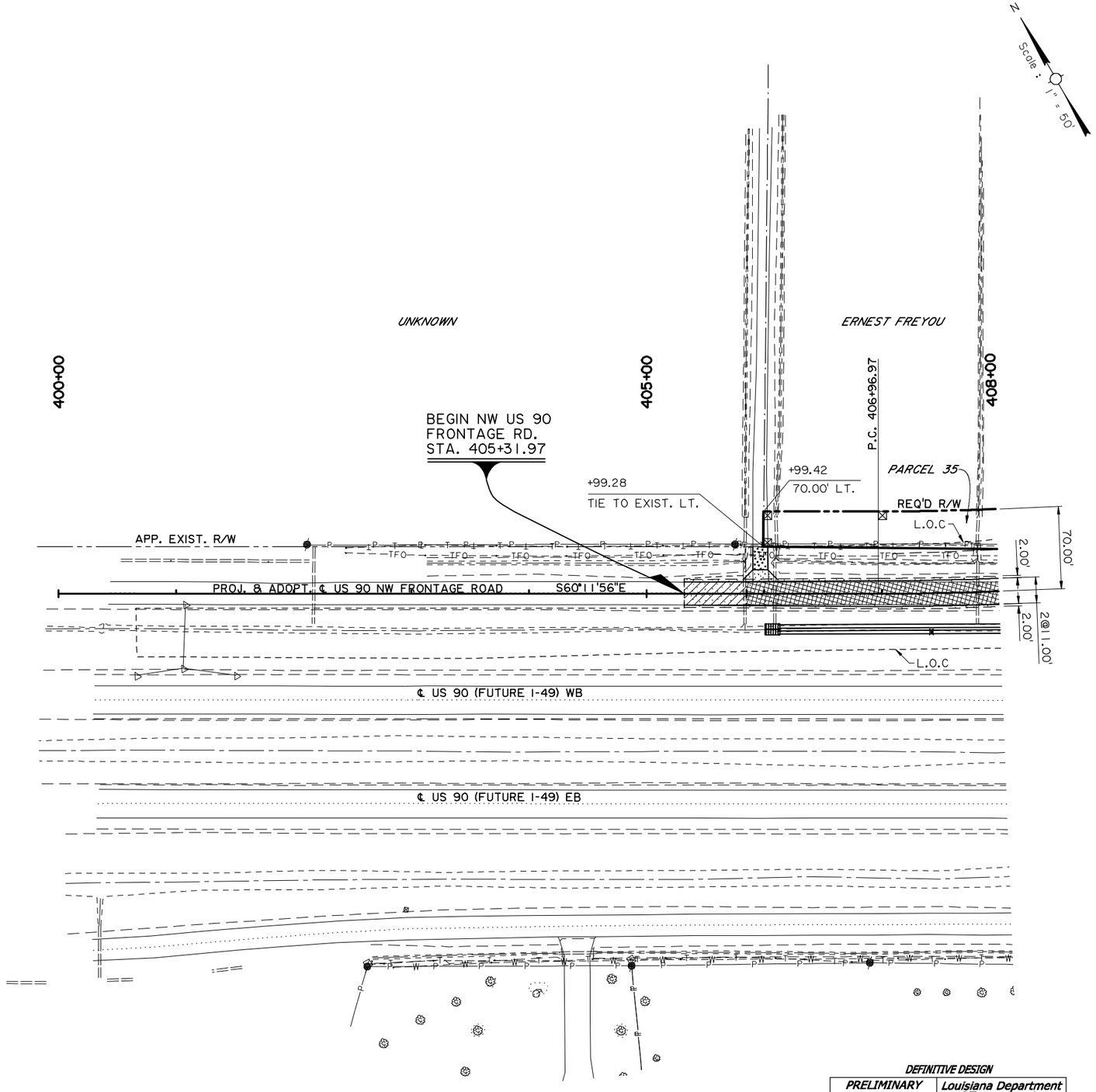

FOR INFORMATIONAL PURPOSES ONLY
PROPERTY LINES SHOWN FROM ST. MARY PARISH TAX ASSESSOR'S MAP. NO PROPERTY SURVEY WAS CONDUCTED.
EXISTING R/W AND PROPERTY LINES TO BE VERIFIED VIA PROPERTY SURVEY UNDER THE DIRECTION OF A LA. REG. PLS.

DEFINITIVE DESIGN

PRELIMINARY	*Louisiana Department of Transportation and Development*
NOT TO BE USED FOR CONSTRUCTION, BIDDING, RECORDATION, CONVEYANCE, SALES OR AS THE BASIS FOR THE ISSUANCE OF A PERMIT.	*ENGINEER: DENNIS M. HYMEL JR.* *LICENSE #: 38172* *DATE:* JULY 2015

SHEET NUMBER RW-12

PARISH	CONTROL SECTION	STATE PROJECT
ST. MARY	424-05, 239-31	H.004932

DESIGNED / CHECKED	DETAILED / CHECKED	SERIES NUMBER
P. OLIVIER / D. HYMEL	G. ARIAS / D. BINET	

NO.	DATE	REVISION OR CHANGE ORDER DESCRIPTION	BY

RIGHT-OF-WAY PARCELS
NW FRONTAGE ROAD
US 90 @ LA 318 INTERCHANGE

TBS

PRELIMINARY PLANS

I:\THB\LA 318_US 90 DB\Definitive Design\DGN\Sheets\ROW Exhibits\05_ROW_NW.dgn 6/30/2015 18:46

408+00

410+00

415+00

420+00

421+00

ERNEST FREYOU

ERNEST FREYOU

KERRY LANDRY

LANDRY LIVING TRUST

ASHLEY LANDRY LLC

KERRY LANDRY

DONELSON T. CAFFERY

DONELSON T. CAFFERY

PROJ. & ADOPT ℄ CURVE DATA
P.I. STA. 411+84.07
Δ = 21°13'19"
D = 02°12'13"
T = 487.10'
L = 963.03'
R = 2600.00'

REQ'D R/W

PARCEL 35

+37.06
70.00' LT.

L.O.C

+68.56
70.00' LT.

PARCEL 36

+11.94
70.00' LT.

+58.82
70.00' LT.

PARCEL 37

+07.59
70.00' LT.

P.T. 416+60.00

PARCEL 38

APP. EXIST. R/W

APP. EXIST. R/W

+64.46
77.84' LT.

+70.86
70.00' LT.

PARCEL 40

REQ'D R/W

PROJ. & ADOPT ℄ US 90
NW FRONTAGE ROAD

S81°25'16"E

L.O.C

2.00'

2@11.00'

70.00'

140.00'

2.00'

70.00'

L.O.C

REQ'D R/W

+61.13
70.00' RT.

+21.37
172.39' RT.

REQ'D R/W

+22.50
248.09' RT.

APP. EXIST. R/W

WILLIAM S. PATOUT INC.

PARCEL 39

℄ US 90 (FUTURE I-49) WB

℄ US 90 (FUTURE I-49) EB

℄ US 90 (FUTURE I-49) FRONTAGE RD.

Scale : 1" = 50'

FOR INFORMATIONAL PURPOSES ONLY
PROPERTY LINES SHOWN FROM ST. MARY PARISH TAX ASSESSOR'S MAP. NO PROPERTY SURVEY WAS CONDUCTED.
EXISTING R/W AND PROPERTY LINES TO BE VERIFIED VIA PROPERTY SURVEY UNDER THE DIRECTION OF A LA. REG. PLS.

DEFINITIVE DESIGN

PRELIMINARY	Louisiana Department of Transportation and Development
NOT TO BE USED FOR CONSTRUCTION, BIDDING, RECORDATION, CONVEYANCE, SALES OR AS THE BASIS FOR THE ISSUANCE OF A PERMIT.	ENGINEER: DENNIS M. HYMEL JR. LICENSE #: 38172 DATE: JULY 2015

SHEET NUMBER RW-13

PARISH	CONTROL SECTION	STATE PROJECT
ST. MARY	424-05, 239-31	H.004932

DESIGNED P. OLIVIER
CHECKED D. HYMEL
DETAILED G. ARIAS
CHECKED D. BINET
SERIES NUMBER

NO. | DATE | REVISION OR CHANGE ORDER DESCRIPTION | BY

RIGHT-OF-WAY PARCELS
NW FRONTAGE ROAD
US 90 @ LA 318 INTERCHANGE

TBS

PRELIMINARY PLANS

I:\THB\LA 318_US 90 DB\Definitive Design\DGN\Sheets\ROW Exhibits\06_ROW NW.dgn 6/30/2015 18:49

DONELSON T. CAFFERY

BERYL G. DUCOTE

421+00

425+00

430+00

432+00

+47.64
70.00' LT.

PARCEL 40

REQ'D R/W

L.O.C

PROJ. & ADOPT. ℄ US 90 NW FRONTAGE ROAD

+38.20
70.00' LT.

REQ'D R/W

PARCEL 13

70.00'
2.00'
140.00'
70.00'
2.00'
2@11.00'

S81°25'16"E

S39°56'07"E

2.00'
70.00'
140.00'

PARCEL 42

+01.54
70.00' RT.

L.O.C

PARCEL 43

REQ'D R/W

BERYL G. DUCOTE

REQ'D R/W

+94.99
70.00' RT.

+28.61
70.00' RT.

PARCEL 41

PROJ. & ADOPT ℄
CURVE DATA
P.I. STA. 427+68.08
Δ = 21°29'09"
D = 02°51'53"
T = 379.46
L = 750.00'
R = 2000.00'

+38.53
70.00' RT.

P.C. 423+88.62

P.T. 431+38.62

DONELSON T. CAFFERY

ANASTASIA P. DOMINGUES

SANDRA WYBLE BROUSSARD

LORI B. FUSELIER

ANASTASIA P. DOMINGUES

BERYL G. DUCOTE

ANASTASIA P. DOMINGUES

THE FOUL CARD CORP.

APP. EXIST. R/W

FOR INFORMATIONAL PURPOSES ONLY
PROPERTY LINES SHOWN FROM ST. MARY PARISH TAX ASSESSOR'S MAP. NO PROPERTY SURVEY WAS CONDUCTED.
EXISTING R/W AND PROPERTY LINES TO BE VERIFIED
VIA PROPERTY SURVEY UNDER THE DIRECTION OF A LA. REG. PLS.

DEFINITIVE DESIGN

PRELIMINARY	Louisiana Department of Transportation and Development
NOT TO BE USED FOR CONSTRUCTION, BIDDING, RECORDATION, CONVEYANCE, SALES OR AS THE BASIS FOR THE ISSUANCE OF A PERMIT.	ENGINEER: DENNIS M. HYMEL, JR. LICENSE #: 38172 DATE: JULY 2015

SHEET NUMBER RW-14

DESIGNED P. OLIVIER CHECKED D. HYMEL	PARISH ST. MARY	CONTROL SECTION 424-05, 239-31	STATE PROJECT H.004932
DETAILED G. ARIAS CHECKED D. BINET			

NO.	DATE	REVISION OR CHANGE ORDER DESCRIPTION	BY

RIGHT-OF-WAY PARCELS
NW FRONTAGE ROAD
US 90 @ LA 318 INTERCHANGE

PRELIMINARY PLANS

I:\THB\LA 318_US 90 DB\Definitive Design\DGN\Sheets\ROW Exhibits\07_ROW NW.dgn 6/30/2015 18:50

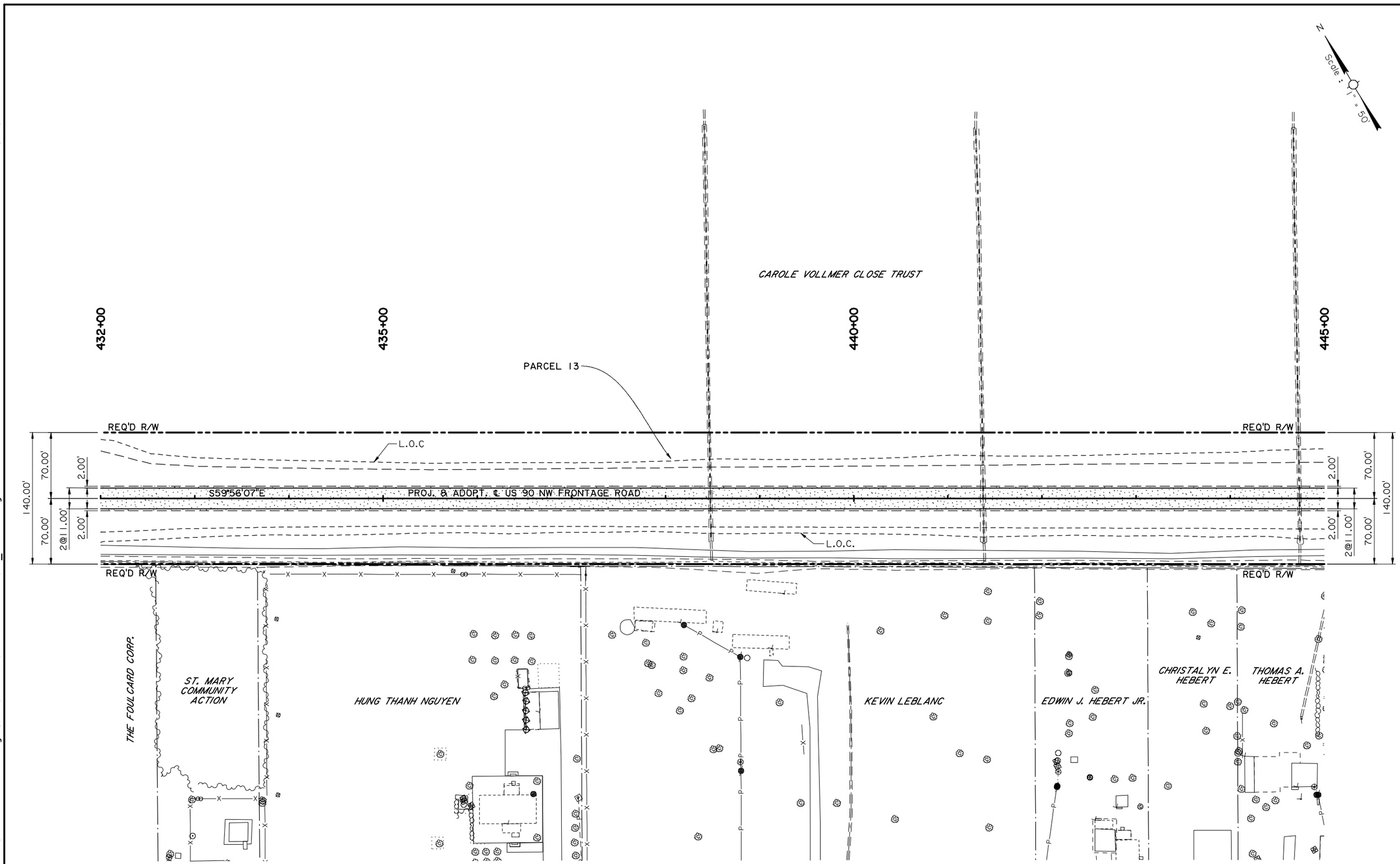

FOR INFORMATIONAL PURPOSES ONLY
PROPERTY LINES SHOWN FROM ST. MARY PARISH TAX ASSESSOR'S MAP. NO PROPERTY SURVEY WAS CONDUCTED.
EXISTING R/W AND PROPERTY LINES TO BE VERIFIED
VIA PROPERTY SURVEY UNDER THE DIRECTION OF A LA. REG. PLS.

DEFINITIVE DESIGN

PRELIMINARY	Louisiana Department of Transportation and Development
NOT TO BE USED FOR CONSTRUCTION, BIDDING, RECORDATION, CONVEYANCE, SALES OR AS THE BASIS FOR THE ISSUANCE OF A PERMIT.	ENGINEER: DENNIS M. HYMEL, JR. LICENSE #: 38172 DATE: JULY 2015

SHEET NUMBER RW-15

PARISH	CONTROL SECTION	STATE PROJECT
ST. MARY	424-05, 239-31	H.004932

DESIGNED	P. OLIVIER
CHECKED	D. HYMEL
DETAILED	G. ARIAS
CHECKED	D. BINET
SERIES NUMBER	

NO.	DATE	REVISION OR CHANGE ORDER DESCRIPTION	BY

RIGHT OF WAY PARCELS
NW FRONTAGE ROAD
US 90 @ LA 318 INTERCHANGE

TBS

PRELIMINARY PLANS

I:\THB\LA 318_US 90 DB\Definitive Design\DGN\Sheets\ROW Exhibits\08_ROW_NW.dgn 6/30/2015 18:53

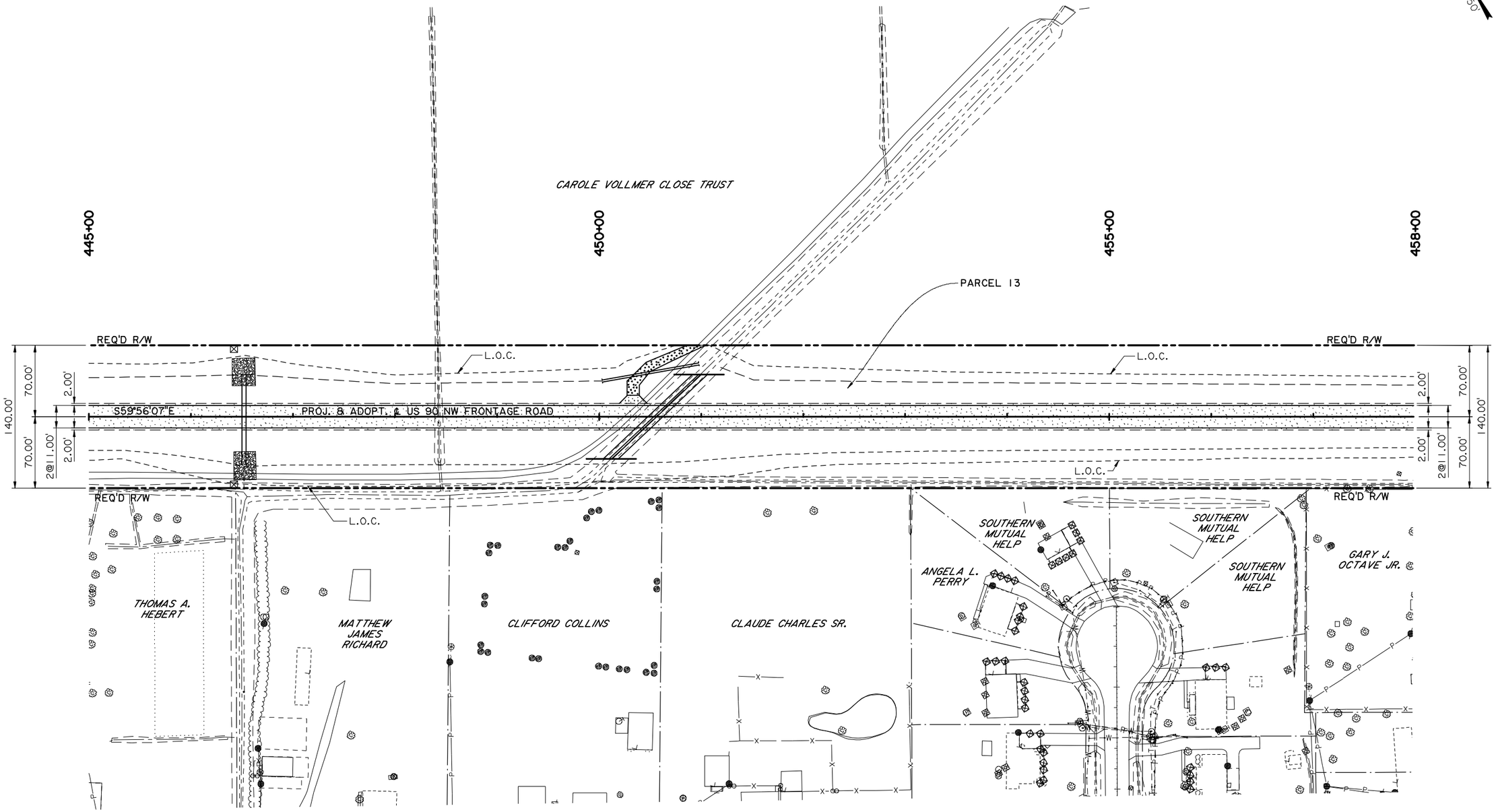

FOR INFORMATIONAL PURPOSES ONLY
PROPERTY LINES SHOWN FROM ST. MARY PARISH TAX ASSESSOR'S MAP. NO PROPERTY SURVEY WAS CONDUCTED.
EXISTING R/W AND PROPERTY LINES TO BE VERIFIED
VIA PROPERTY SURVEY UNDER THE DIRECTION OF A LA. REG. PLS.

DEFINITIVE DESIGN

PRELIMINARY	Louisiana Department of Transportation and Development
NOT TO BE USED FOR CONSTRUCTION, BIDDING, RECORDATION, CONVEYANCE, SALES OR AS THE BASIS FOR THE ISSUANCE OF A PERMIT.	ENGINEER: DENNIS M. HYMEL JR. LICENSE #: 38172 DATE: JULY 2015

SHEET NUMBER RW-16

DESIGNED P. OLIVIER CHECKED D. HYMEL	PARISH ST. MARY	CONTROL SECTION 424-05, 239-31	STATE PROJECT H.004932
DETAILED G. ARIAS CHECKED D. BINET			

NO.	DATE	REVISION OR CHANGE ORDER DESCRIPTION	BY

RIGHT-OF-WAY PARCELS
NW FRONTAGE ROAD
US 90 @ LA 318 INTERCHANGE

STATE OF LOUISIANA DEPARTMENT OF TRANSPORTATION AND DEVELOPMENT DOTD

TBS

PRELIMINARY PLANS

I:\THB\LA 318_US 90 DB\Definitive Design\DGN\Sheets\ROW Exhibits\09_ROW_NW.dgn 6/30/2015 18:55

458+00

460+00

CAROLE VOLLMER CLOSE TRUST

465+00

APP. EXIST. R/W

+41.15
TIE TO EXIST. LT.

PARCEL 13

REQ'D R/W

L.O.C.

140.00'
70.00'
2.00'
2@11.00'
2.00'
70.00'

S59°56'07"E

PROJ. & ADOPT. ℄ US 90 NW FRONTAGE ROAD

+20.97
TIE TO EXIST. RT.

REQ'D R/W

L.O.C.

REQ'D R/W

GARY J. OCTAVE, JR.

PATRICK VERRET

ALTON STACY

ALTON STACY

WILLIAM J. STACY

APP. EXIST. R/W

REQ'D C OF A

500+00

LA HWY. 318

END NW US 90
FRONTAGE RD.
STA. 467+73.30

P.C. 502+36.00

REQ'D C OF A

PARCEL 14

N

Scale: 1" = 50'

FOR INFORMATIONAL PURPOSES ONLY
PROPERTY LINES SHOWN FROM ST. MARY PARISH TAX ASSESSOR'S MAP. NO PROPERTY SURVEY WAS CONDUCTED. EXISTING R/W AND PROPERTY LINES TO BE VERIFIED VIA PROPERTY SURVEY UNDER THE DIRECTION OF A LA. REG. PLS.

DEFINITIVE DESIGN

PRELIMINARY	Louisiana Department of Transportation and Development
NOT TO BE USED FOR CONSTRUCTION, BIDDING, RECORDATION, CONVEYANCE, SALES OR AS THE BASIS FOR THE ISSUANCE OF A PERMIT.	ENGINEER: DENNIS M. HYMEL JR. LICENSE #: 38172 DATE: JULY 2015

SHEET NUMBER RW-17

PARISH	CONTROL SECTION	STATE PROJECT
ST. MARY	424-05, 239-31	H.004932

DESIGNED P. OLIVIER
CHECKED D. HYMEL
DETAILED G. ARIAS
CHECKED D. BINET
SERIES NUMBER

NO.	DATE	REVISION OR CHANGE ORDER DESCRIPTION	BY

STATE OF LOUISIANA DEPARTMENT OF TRANSPORTATION AND DEVELOPMENT

RIGHT-OF-WAY PARCELS
NW FRONTAGE ROAD
US 90 @ LA 318 INTERCHANGE

DOTD

TBS

PRELIMINARY PLANS

I:\THB\LA 318_US 90 DB\Definitive Design\DGN\Sheets\ROW Exhibits\10_ROW_NE.dgn 6/30/2015 18:56

LEGEND

REQ'D ASPHALT PAVEMENT

REMOVAL OF SURFACING & BASE

REMOVAL OF ASPHALT

Scale: 1" = 50'

BEGIN NE US 90 FRONTAGE ROAD STA. 500+26.00

500+00

505+00

508+00

SMP RECREATION DIST No. 5

ROEMAN ALEXANDER EST

DOROTHY G. LANDRY

PARCEL 14

REQ'D R/W

+08.63

TIE TO EXIST. LT.

L.O.C.

S51°42'34"E PROJ. & ADOPT. ℄ US 90 NE FRONTAGE ROAD

℄ LA HWY. 318

REQ'D R/W

+17.56

TIE TO EXIST. RT.

P.C. 502+36.00

REQ'D C OF A

L.O.C.

2.00'

70.00'

2@11.00'

2.00'

70.00'

140.00'

PROJ. & ADOPT ℄

REQ'D R/W

CURVE DATA

P.I. STA. 506+16.51

Δ = 14°56'42"

D = 01°58'30"

T = 380.51'

L = 756.69'

R = 2901.00'

DOROTHY G. LANDRY

FOR INFORMATIONAL PURPOSES ONLY
PROPERTY LINES SHOWN FROM ST. MARY PARISH TAX ASSESSOR'S MAP. NO PROPERTY SURVEY WAS CONDUCTED. EXISTING R/W AND PROPERTY LINES TO BE VERIFIED VIA PROPERTY SURVEY UNDER THE DIRECTION OF A LA. REG. PLS.

DEFINITIVE DESIGN

PRELIMINARY	Louisiana Department of Transportation and Development
NOT TO BE USED FOR CONSTRUCTION, BIDDING, RECORDATION, CONVEYANCE, SALES OR AS THE BASIS FOR THE ISSUANCE OF A PERMIT.	ENGINEER: DENNIS M. HYMEL JR. LICENSE #: 38172 DATE: JULY 2015

SHEET NUMBER RW-18

DESIGNED P. OLIVIER	PARISH ST. MARY	CONTROL SECTION 424-05, 239-31	STATE PROJECT H.004932
CHECKED D. HYMEL			
DETAILED G. ARIAS			
CHECKED D. BINET			

SERIES NUMBER

NO.	REVISION OR CHANGE ORDER DESCRIPTION	BY	DATE

RIGHT-OF-WAY PARCELS

NE FRONTAGE ROAD

US 90 @ LA 318 INTERCHANGE

PRELIMINARY PLANS

I:\THB\LA 318_US 90 DB\Definitive Design\DGN\Sheets\ROW Exhibits\11_ROW_NE.dgn 6/30/2015 18:57

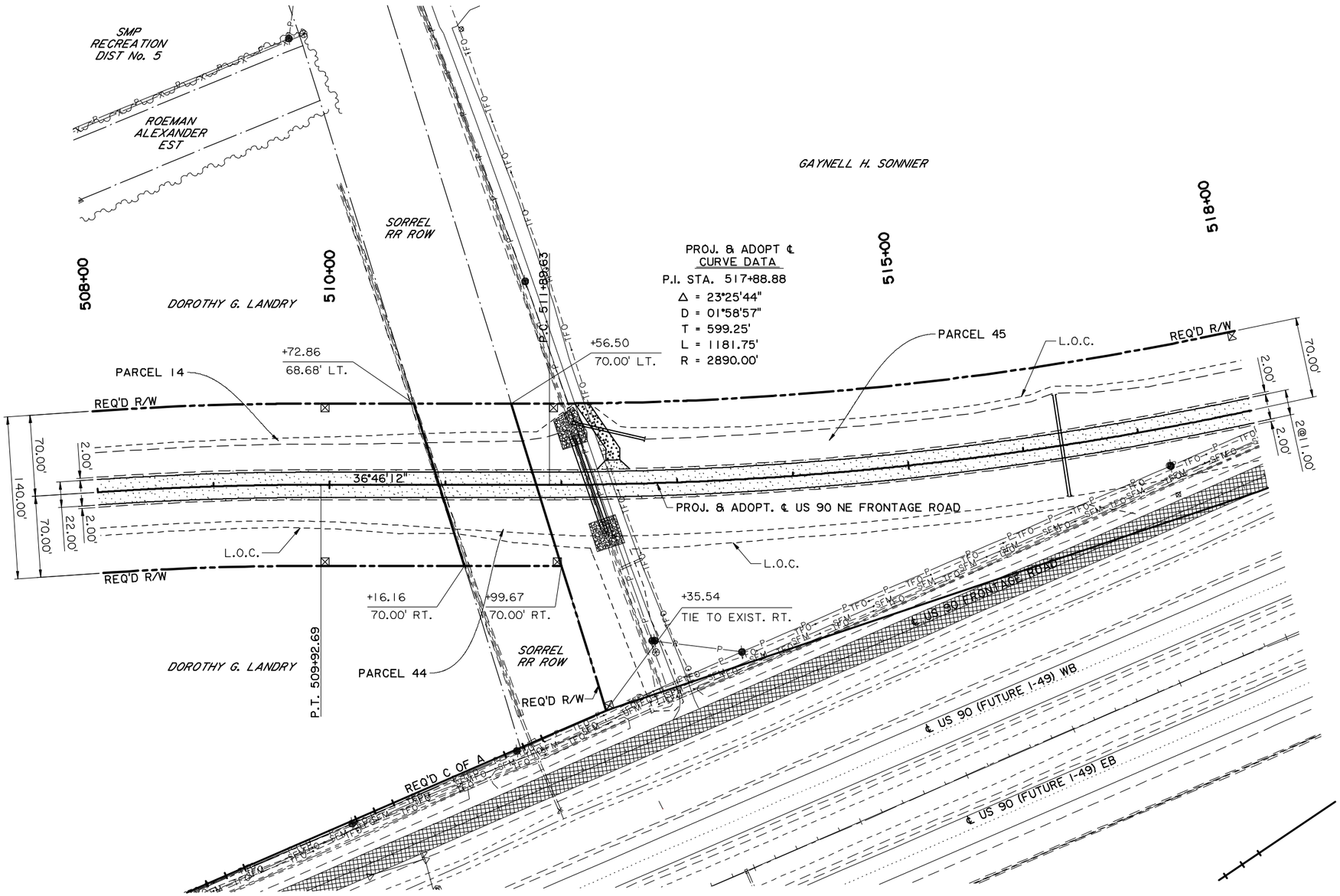

FOR INFORMATIONAL PURPOSES ONLY
PROPERTY LINES SHOWN FROM ST. MARY PARISH TAX ASSESSOR'S MAP. NO PROPERTY SURVEY WAS CONDUCTED. EXISTING R/W AND PROPERTY LINES TO BE VERIFIED VIA PROPERTY SURVEY UNDER THE DIRECTION OF A LA. REG. PLS.

DEFINITIVE DESIGN

PRELIMINARY	Louisiana Department of Transportation and Development
NOT TO BE USED FOR CONSTRUCTION, BIDDING, RECORDATION, CONVEYANCE, SALES OR AS THE BASIS FOR THE ISSUANCE OF A PERMIT.	ENGINEER: DENNIS M. HYMEL JR. LICENSE #: 38172 DATE: JULY 2015

SHEET NUMBER RW-19

DESIGNED P. OLIVIER CHECKED D. HYMEL	PARISH ST. MARY	CONTROL SECTION 424-05, 239-31	STATE PROJECT H.004932
DETAILED G. ARIAS CHECKED D. BINET			

NO.	DATE	REVISION OR CHANGE ORDER DESCRIPTION	BY

RIGHT-OF-WAY PARCELS
NE FRONTAGE ROAD
US 90 @ LA 318 INTERCHANGE

PRELIMINARY PLANS

6/30/2015 18:59

I:\THB\LA 318_US 90 DB\Definitive Design\DGN\Sheets\ROW Exhibits\12_ROW_NE.dgn

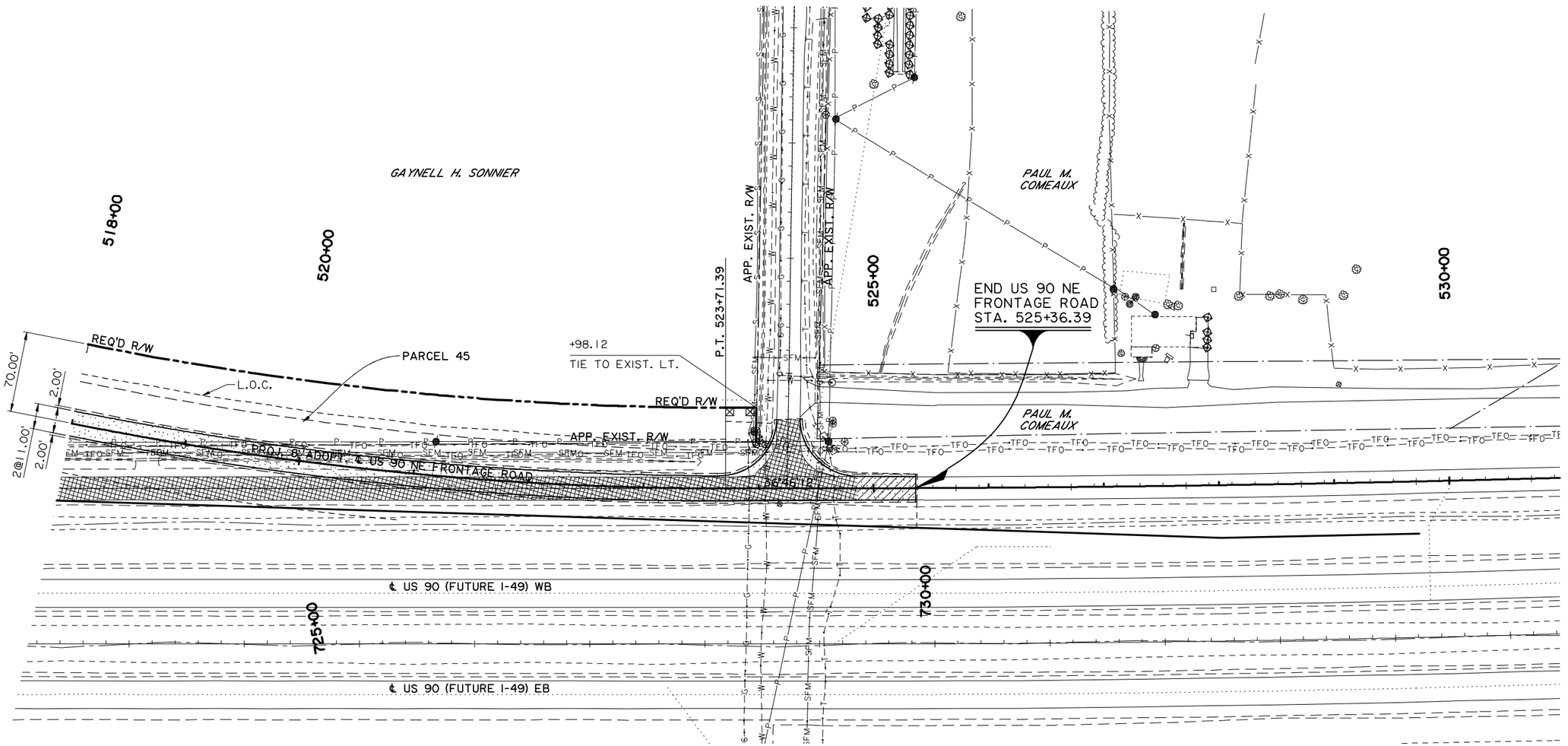

FOR INFORMATIONAL PURPOSES ONLY
PROPERTY LINES SHOWN FROM ST. MARY PARISH TAX ASSESSOR'S MAP. NO PROPERTY SURVEY WAS CONDUCTED.
EXISTING R/W AND PROPERTY LINES TO BE VERIFIED
VIA PROPERTY SURVEY UNDER THE DIRECTION OF A LA. REG. PLS.

DEFINITIVE DESIGN

PRELIMINARY	*Louisiana Department of Transportation and Development*
NOT TO BE USED FOR CONSTRUCTION, BIDDING, RECORDATION, CONVEYANCE, SALES OR AS THE BASIS FOR THE ISSUANCE OF A PERMIT.	*ENGINEER: DENNIS M. HYMEL, JR.* *LICENSE #: 38172* *DATE:* JULY 2015

SHEET NUMBER RW-20

PARISH	CONTROL SECTION	STATE PROJECT
ST. MARY	424-05, 239-31	H.004932

DESIGNED	DETAILED	SERIES NUMBER
P. OLIVIER D. HYMEL	G. ARIAS D. BINET	

NO.	DATE	REVISION OR CHANGE ORDER DESCRIPTION	BY

RIGHT-OF-WAY PARCELS
NE FRONTAGE ROAD
US 90 @ LA 318 INTERCHANGE

TBS

PRELIMINARY PLANS
I:\THB\LA 318_US 90 DB\Definitive Design\DGN\Sheets\ROW Exhibits\V13_ROW_SW.dgn
6/30/2015 19:00

LEGEND

- REQ'D ASPHALT PAVEMENT
- REMOVAL OF SURFACING & BASE
- REMOVAL OF ASPHALT

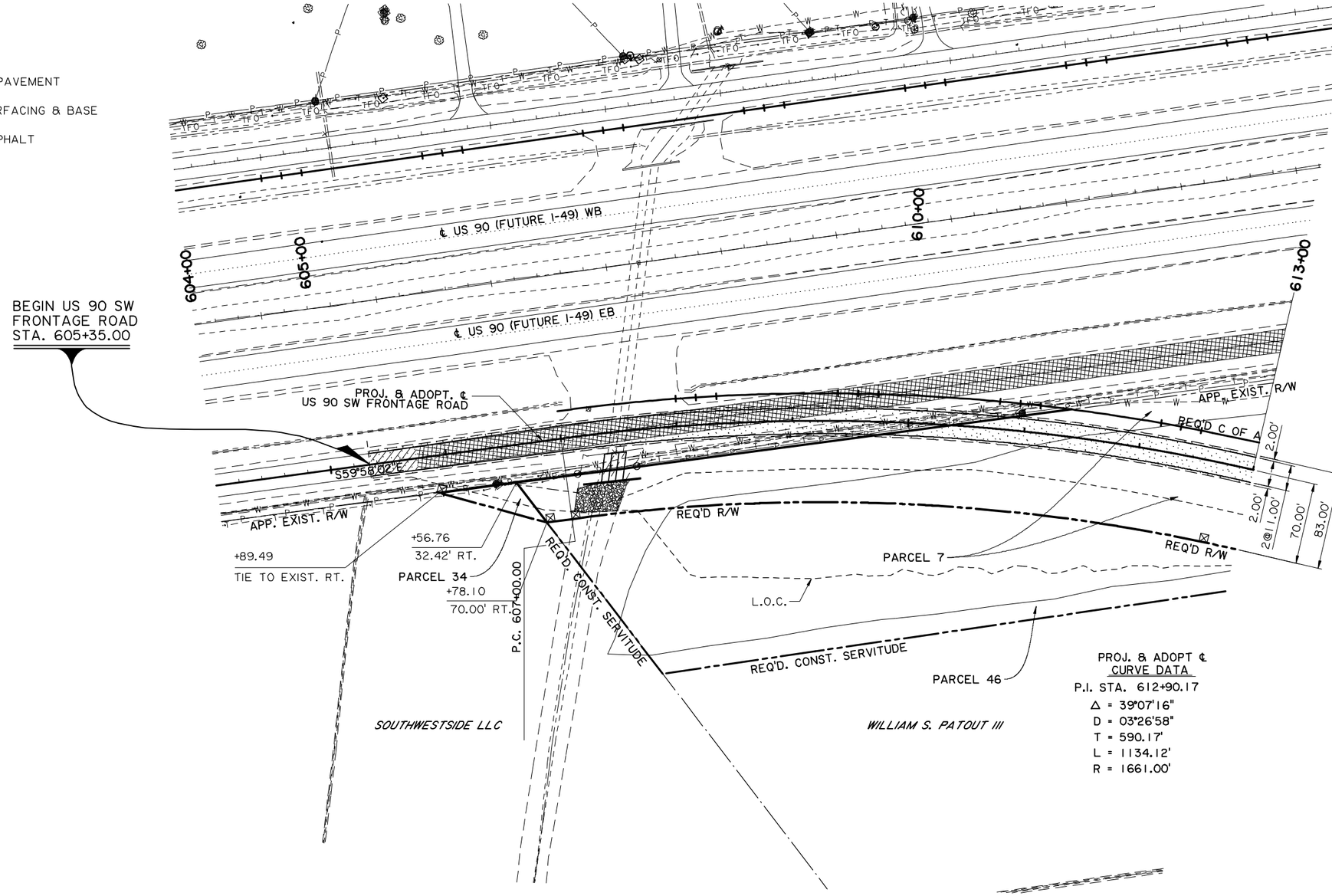

FOR INFORMATIONAL PURPOSES ONLY
PROPERTY LINES SHOWN FROM ST. MARY PARISH TAX ASSESSOR'S MAP. NO PROPERTY SURVEY WAS CONDUCTED.
EXISTING R/W AND PROPERTY LINES TO BE VERIFIED VIA PROPERTY SURVEY UNDER THE DIRECTION OF A LA. REG. PLS.

DEFINITIVE DESIGN

PRELIMINARY	Louisiana Department of Transportation and Development
NOT TO BE USED FOR CONSTRUCTION, BIDDING, RECORDATION, CONVEYANCE, SALES OR AS THE BASIS FOR THE ISSUANCE OF A PERMIT.	ENGINEER: DENNIS M. HYMEL JR. LICENSE #: 38172 DATE: JULY 2015

SHEET NUMBER	RW-21
PARISH	ST. MARY
CONTROL SECTION	424-05, 239-31
STATE PROJECT	H.004932
DESIGNED P. OLIVIER CHECKED D. HYMEL	DETAILED G. ARIAS CHECKED D. BINET
SERIES NUMBER	

NO.	DATE	REVISION OR CHANGE ORDER DESCRIPTION	BY

RIGHT-OF-WAY PARCELS
SW FRONTAGE ROAD
US 90 @ LA 318 INTERCHANGE

PRELIMINARY PLANS
I:\THB\LA 318_US 90 DB\Definitive Design\DGN\Sheets\ROW Exhibits\14_ROW_SW.dgn 6/30/2015 19:02

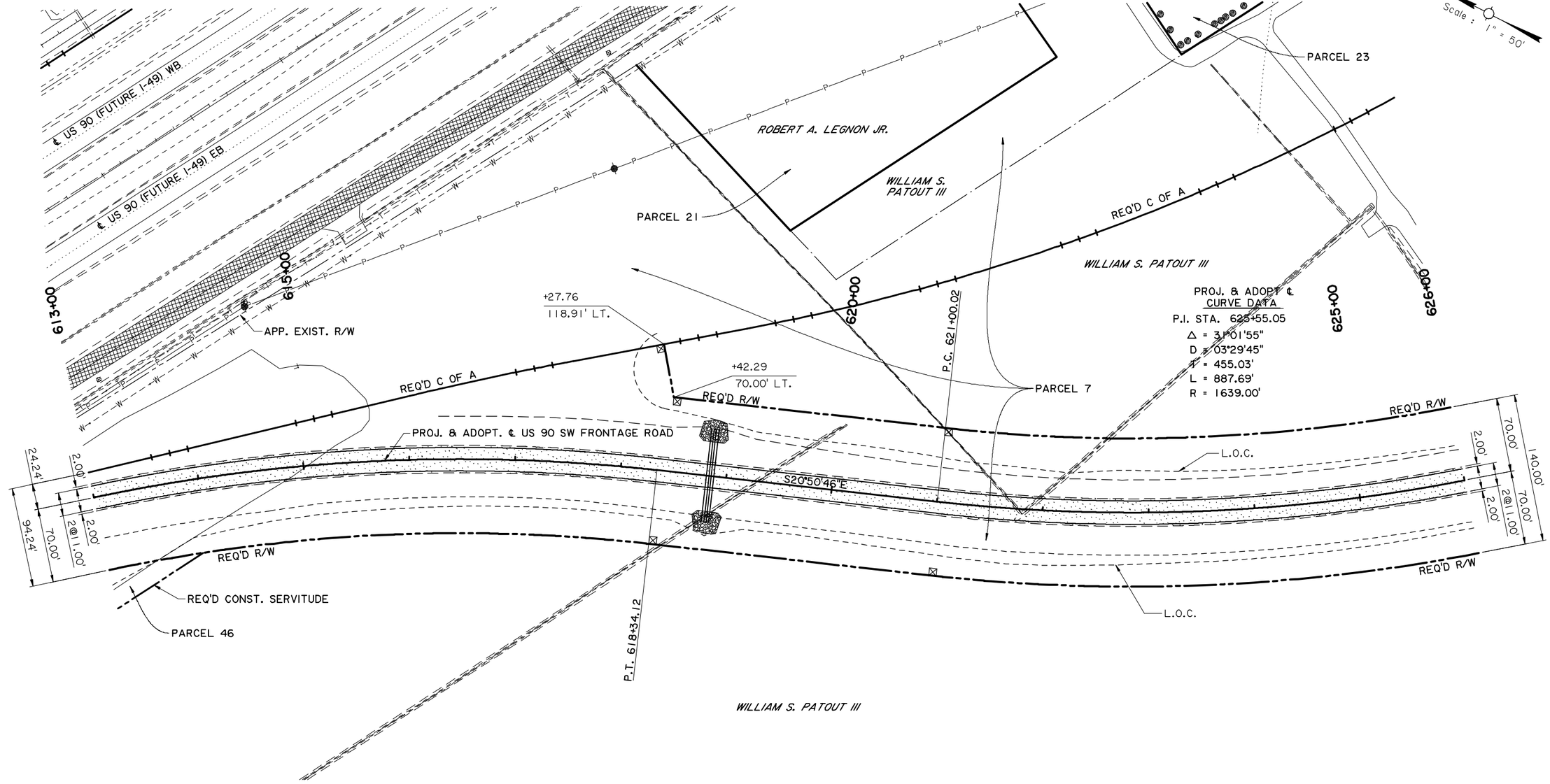

FOR INFORMATIONAL PURPOSES ONLY
PROPERTY LINES SHOWN FROM ST. MARY PARISH TAX ASSESSOR'S MAP. NO PROPERTY SURVEY WAS CONDUCTED.
EXISTING R/W AND PROPERTY LINES TO BE VERIFIED VIA PROPERTY SURVEY UNDER THE DIRECTION OF A LA. REG. PLS.

DEFINITIVE DESIGN

PRELIMINARY	*Louisiana Department of Transportation and Development*
NOT TO BE USED FOR CONSTRUCTION, BIDDING, RECORDATION, CONVEYANCE, SALES OR AS THE BASIS FOR THE ISSUANCE OF A PERMIT.	*ENGINEER: DENNIS M. HYMEL, JR.* *LICENSE #: 38172* *DATE:* JULY 2015

SHEET NUMBER: RW-22

DESIGNED / CHECKED	DETAILED / CHECKED	PARISH	CONTROL SECTION	STATE PROJECT
P. OLIVIER / D. HYMEL	G. ARIAS / D. BINET	ST. MARY	424-05, 239-31	H.004932

NO.	DATE	REVISION OR CHANGE ORDER DESCRIPTION	BY

RIGHT-OF-WAY PARCELS
SW FRONTAGE ROAD
US 90 @ LA 318 INTERCHANGE

PRELIMINARY PLANS

I:\THB\LA 318_US 90 DB\Definitive Design\DGN\Sheets\ROW Exhibits\15_ROW_SW.dgn 6/30/2015 19:03

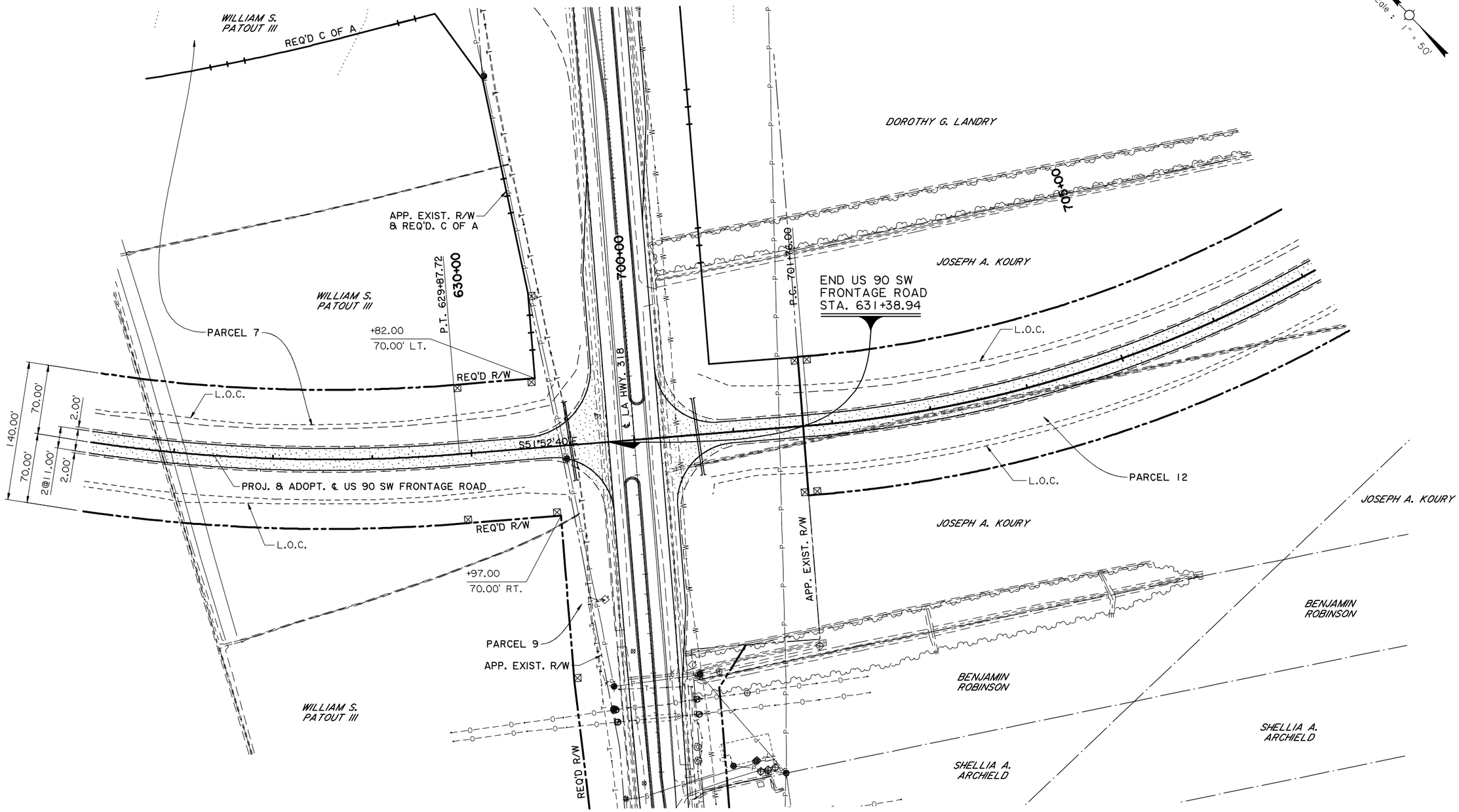

FOR INFORMATIONAL PURPOSES ONLY
PROPERTY LINES SHOWN FROM ST. MARY PARISH TAX ASSESSOR'S MAP. NO PROPERTY SURVEY WAS CONDUCTED.
EXISTING R/W AND PROPERTY LINES TO BE VERIFIED VIA PROPERTY SURVEY UNDER THE DIRECTION OF A LA. REG. PLS.

DEFINITIVE DESIGN

PRELIMINARY	Louisiana Department of Transportation and Development
NOT TO BE USED FOR CONSTRUCTION, BIDDING, RECORDATION, CONVEYANCE, SALES OR AS THE BASIS FOR THE ISSUANCE OF A PERMIT.	ENGINEER: DENNIS M. HYMEL, JR. LICENSE #: 38172 DATE: JULY 2015

SHEET NUMBER RW-23

PARISH	CONTROL SECTION	STATE PROJECT
ST. MARY	424-05, 239-31	H.004932

DESIGNED	P. OLIVIER
CHECKED	D. HYMEL
DETAILED	G. ARIAS
CHECKED	D. BINET

SERIES NUMBER

NO.	DATE	REVISION OR CHANGE ORDER DESCRIPTION	BY

RIGHT-OF-WAY PARCELS
SE FRONTAGE ROAD
US 90 @ LA 318 INTERCHANGE

PRELIMINARY PLANS
I:\THB\LA 318_US 90 DB\Definitive Design\DGN\Sheets\ROW Exhibits\16_ROW_SE.dgn
6/30/2015 19:05

LEGEND

- REQ'D ASPHALT PAVEMENT
- REMOVAL OF SURFACING & BASE
- REMOVAL OF ASPHALT

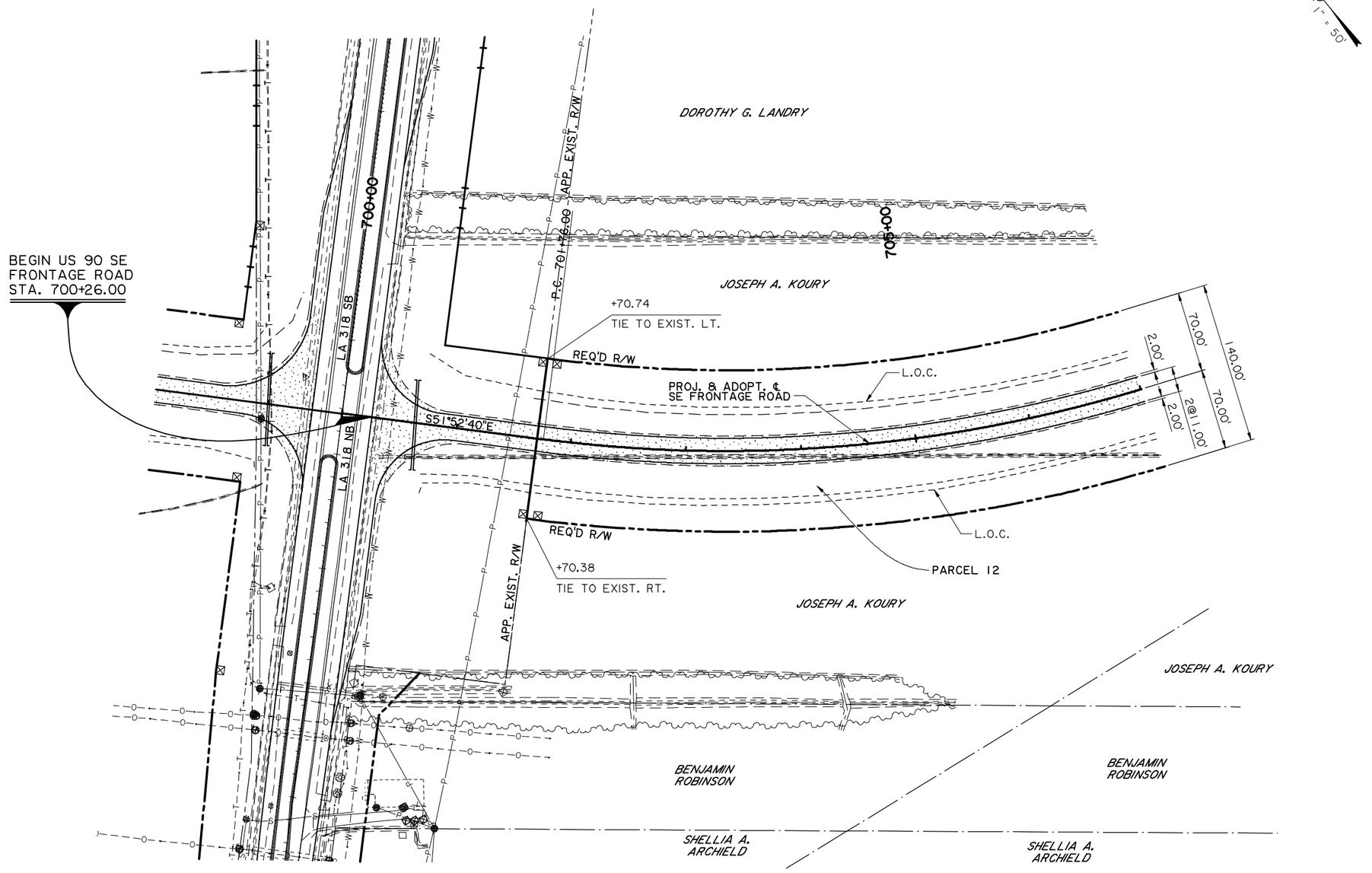

FOR INFORMATIONAL PURPOSES ONLY
PROPERTY LINES SHOWN FROM ST. MARY PARISH TAX ASSESSOR'S MAP. NO PROPERTY SURVEY WAS CONDUCTED.
EXISTING R/W AND PROPERTY LINES TO BE VERIFIED
VIA PROPERTY SURVEY UNDER THE DIRECTION OF A LA. REG. PLS.

DEFINITIVE DESIGN

PRELIMINARY	Louisiana Department of Transportation and Development
NOT TO BE USED FOR CONSTRUCTION, BIDDING, RECORDATION, CONVEYANCE, SALES OR AS THE BASIS FOR THE ISSUANCE OF A PERMIT.	ENGINEER: DENNIS M. HYMEL, JR. LICENSE #: 38172 DATE: JULY 2015

SHEET NUMBER RW-24

PARISH	CONTROL SECTION	STATE PROJECT
ST. MARY	424-05, 239-31	H.004932

DESIGNED / CHECKED	DETAILED / CHECKED	SERIES NUMBER
P. OLIVIER / D. HYMEL	G. ARIAS / D. BINET	

NO.	DATE	REVISION OR CHANGE ORDER DESCRIPTION	BY

RIGHT-OF-WAY PARCELS
SE FRONTAGE ROAD
US 90 @ LA 318 INTERCHANGE

PRELIMINARY PLANS

I:\THB\LA 318_US 90 DB\Definitive Design\DGN\Sheets\ROW Exhibits\17_ROW_SE.dgn 6/30/2015 19:08

DOROTHY G. LANDRY

PARCEL 27

SAM WARE JR.

SORREL RR ROW

PARCEL 28

CELESTE TRIMBLE EST.

APP. EXIST. R/W

PARCEL 26

APP. EXIST. R/W

CELESTE TRIMBLE EST.

N

Scale : 1" = 50'

PROJ. & ADOPT ℄ CURVE DATA

P.I. STA. 707+73.86

Δ = 51°28'55"

D = 04°37'14"

T = 597.86'

L = 1114.18'

R = 1240.00'

710+00

715+00

P.T. 718+90.18

+22.28

TIE TO EXIST. LT.

+92.93

TIE TO EXIST. LT.

PARCEL 29

DOROTHY G. LANDRY

L.O.C.

REQ'D R/W

PARCEL 31

N76°38'25"E

140.00'

70.00'

2@11.00'

2.00'

REQ'D R/W

+51.82

TIE TO EXIST. RT.

PROJ. & ADOPT. ℄ SE FRONTAGE ROAD

REQ'D R/W

L.O.C.

PARCEL 33

+72.68

TIE TO EXIST. RT.

+90.69

70.00' RT.

+19.05

70.00' RT.

PARCEL 12

+17.31

70.00' RT.

JOSEPH A. KOURY

SORREL RR ROW

PARCEL 32

P.C. 715+70.24

GAYNELL H. SONNIER

℄ US 90 FRONTAGE RD.

JOSEPH A. KOURY

SORREL RR ROW

GAYNELL H. SONNIER

FOR INFORMATIONAL PURPOSES ONLY
PROPERTY LINES SHOWN FROM ST. MARY PARISH TAX ASSESSOR'S MAP. NO PROPERTY SURVEY WAS CONDUCTED. EXISTING R/W AND PROPERTY LINES TO BE VERIFIED VIA PROPERTY SURVEY UNDER THE DIRECTION OF A LA. REG. PLS.

DEFINITIVE DESIGN

PRELIMINARY	Louisiana Department of Transportation and Development
NOT TO BE USED FOR CONSTRUCTION, BIDDING, RECORDATION, CONVEYANCE, SALES OR AS THE BASIS FOR THE ISSUANCE OF A PERMIT.	ENGINEER: DENNIS M. HYMEL JR. LICENSE #: 38172 DATE: JULY 2015

SHEET NUMBER RW-25

PARISH	CONTROL SECTION	STATE PROJECT
ST. MARY	424-05, 239-31	H.004932

DESIGNED	DETAILED	CHECKED	SERIES NUMBER
P. OLIVIER D. HYMEL	G. ARIAS D. BINET		

NO.	DATE	REVISION OR CHANGE ORDER DESCRIPTION	BY

RIGHT-OF-WAY PARCELS

SE FRONTAGE ROAD

US 90 @ LA 318 INTERCHANGE

PRELIMINARY PLANS
6/30/2015 19:09
I:\THB\LA 318_US 90 DB\Definitive Design\DGN\Sheets\ROW Exhibits\18_ROW_SE.dgn

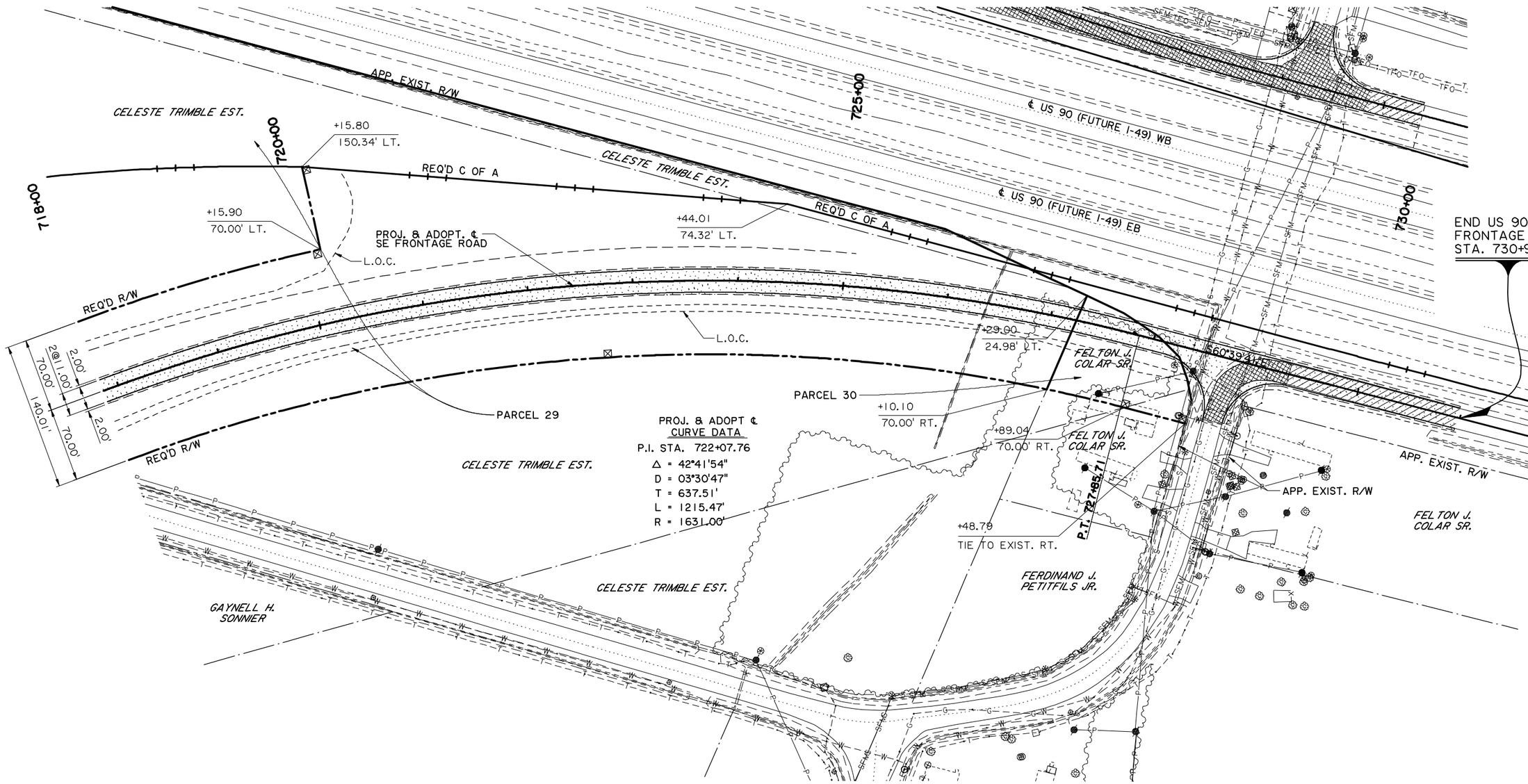

FOR INFORMATIONAL PURPOSES ONLY
PROPERTY LINES SHOWN FROM ST. MARY PARISH TAX ASSESSOR'S MAP. NO PROPERTY SURVEY WAS CONDUCTED.
EXISTING R/W AND PROPERTY LINES TO BE VERIFIED VIA PROPERTY SURVEY UNDER THE DIRECTION OF A LA. REG. PLS.

DEFINITIVE DESIGN

PRELIMINARY	Louisiana Department of Transportation and Development
NOT TO BE USED FOR CONSTRUCTION, BIDDING, RECORDATION, CONVEYANCE, SALES OR AS THE BASIS FOR THE ISSUANCE OF A PERMIT.	ENGINEER: DENNIS M. HYMEL JR. LICENSE #: 38172 DATE: JULY 2015

SHEET NUMBER RW-26

PARISH	CONTROL SECTION	STATE PROJECT
ST. MARY	424-05, 239-31	H.004932

DESIGNED	P. OLIVIER
CHECKED	D. HYMEL
DETAILED	G. ARIAS
CHECKED	D. BINET
SERIES NUMBER	

NO.	DATE	REVISION OR CHANGE ORDER DESCRIPTION	BY

RIGHT-OF-WAY PARCELS
SE FRONTAGE ROAD
US 90 @ LA 318 INTERCHANGE

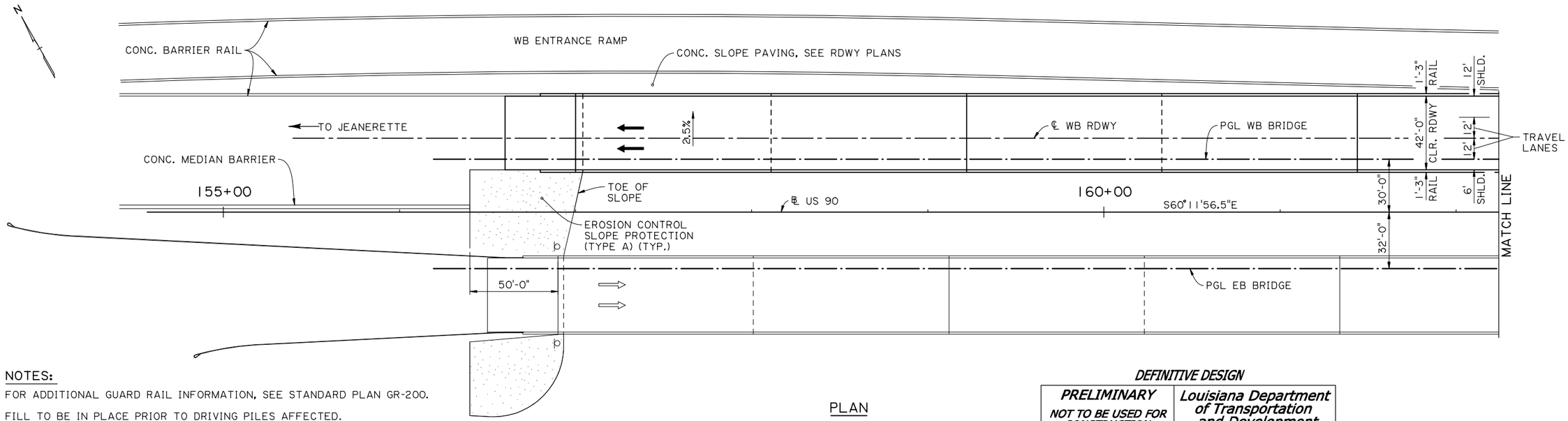

PLAN

NOTES:

FOR ADDITIONAL GUARD RAIL INFORMATION, SEE STANDARD PLAN GR-200.

FILL TO BE IN PLACE PRIOR TO DRIVING PILES AFFECTED.

REFER TO FOUNDATION PLAN FOR LOCATIONS OF PILES, TEST PILES, BORINGS, AND CPTS.

VERTICAL CURVE DATA, BRIDGE ELEVATIONS & BRIDGE STATIONS SHOWN ARE AT PGL WESTBOUND, US 90.

WESTBOUND PROFILE SHOWN. EXISTING GROUND LINE SHOWN IS AT WESTBOUND PROFILE GRADE LINE.

FOR DECK DRAIN LAYOUT, SEE SPAN SHEETS.

FINAL PILE LENGTHS SHALL BE DETERMINED UPON COMPLETION OF TEST PILE.

SEE SHEET 113 FOR TYPICAL ABUTMENT SECTION.

SS = STRIP SEAL JOINT

DEFINITIVE DESIGN

PRELIMINARY	*Louisiana Department of Transportation and Development*
NOT TO BE USED FOR CONSTRUCTION, BIDDING, RECORDATION, CONVEYANCE, SALES OR AS THE BASIS FOR THE ISSUANCE OF A PERMIT.	*ENGINEER: ARUNAVA SAHA* *LICENSE #: 38334* *DATE: JULY 2015*

SHEET SCALE: 1" = 30'

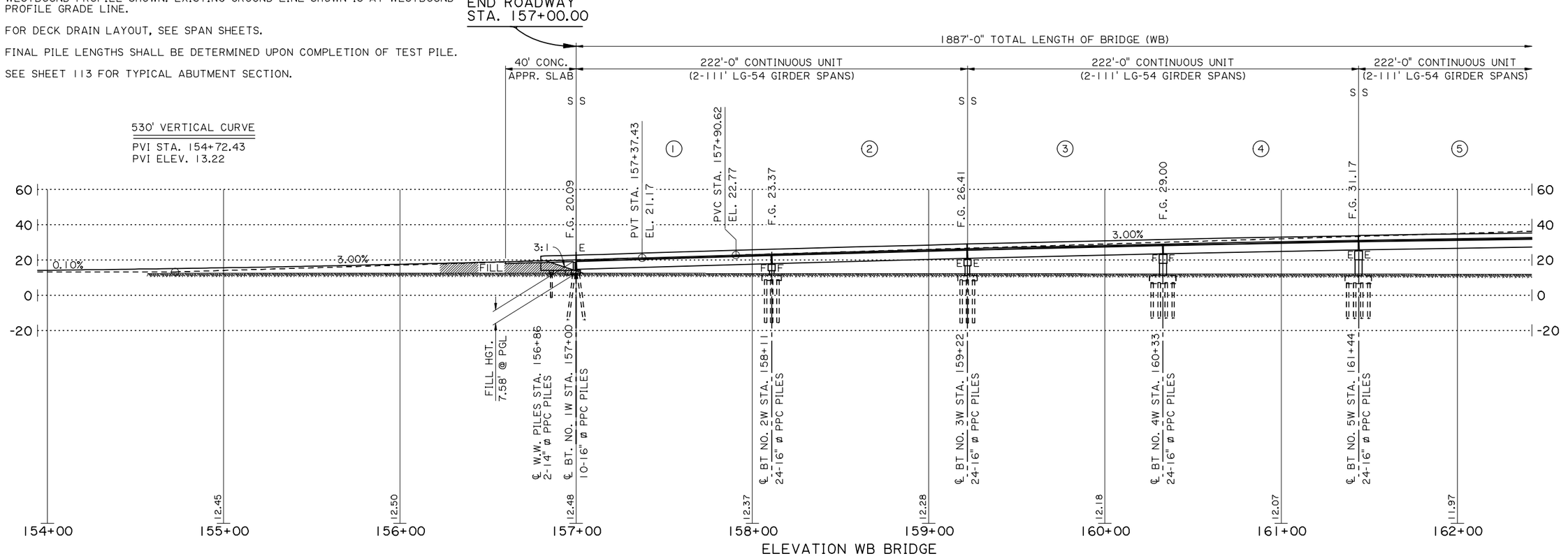

ELEVATION WB BRIDGE

SHEET NUMBER	101
PARISH	ST. MARY
CONTROL SECTION	424-05, 239-31
STATE PROJECT	H.004932
DESIGNED JAP / CHECKED AS	
DETAILED PRG / CHECKED AS	
REVIEWED JBJ / SERIES #	1 OF 6

DEFINITIVE DESIGN
DATE: 7-01-15

NO.	DATE	REVISION OR CHANGE ORDER DESCRIPTION	BY

GENERAL PLAN & ELEVATION
WESTBOUND BRIDGE

DEFINITIVE DESIGN: US 90 @ LA 318

Stantec

v:\2018\active\201802578\03 disciplines\structures\drawing\definitive design\101_GP_1 of 6.dgn 02-JUL-2015 07:53

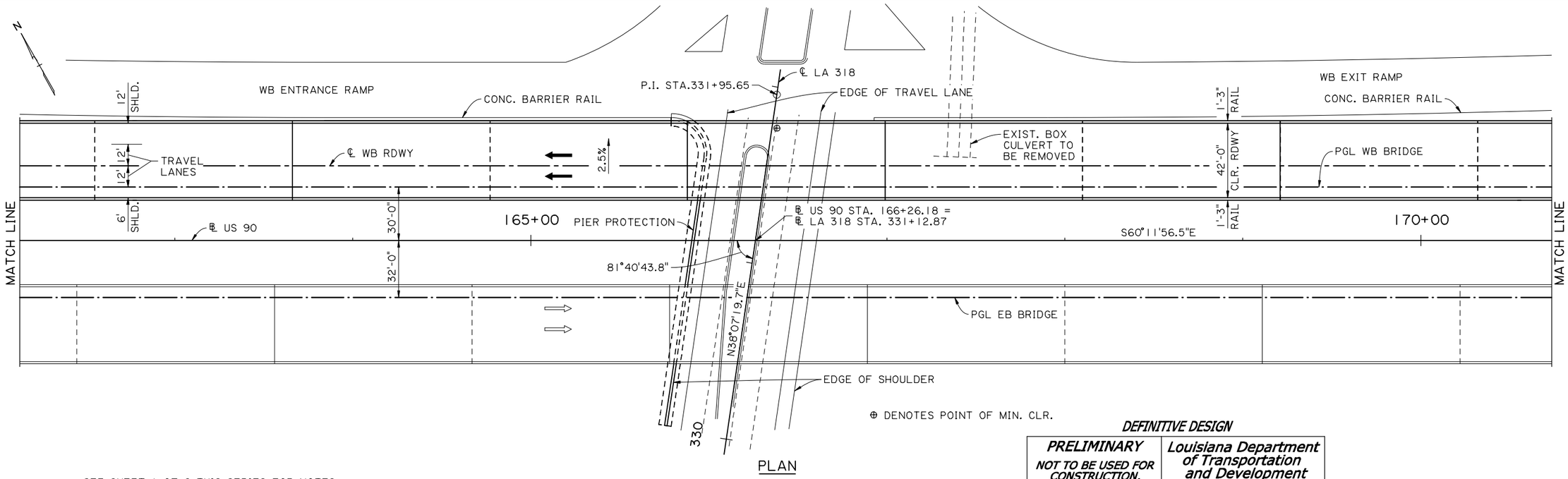

PLAN

SEE SHEET 1 OF 6 THIS SERIES FOR NOTES.

SEE SHEET 113 FOR PIER PROTECTION LAYOUT AND VERTICAL/HORIZONTAL CLEARANCES

1700' VERTICAL CURVE
PVI STA. 166+40.62
PVI ELEV. 48.27

DEFINITIVE DESIGN

PRELIMINARY	***Louisiana Department of Transportation and Development***
NOT TO BE USED FOR CONSTRUCTION, BIDDING, RECORDATION, CONVEYANCE, SALES OR AS THE BASIS FOR THE ISSUANCE OF A PERMIT.	***ENGINEER: ARUNAVA SAHA*** ***LICENSE #: 38334*** ***DATE: JULY 2015***

SHEET SCALE:
1" = 30'

1887'-0" TOTAL LENGTH OF BRIDGE (WB)

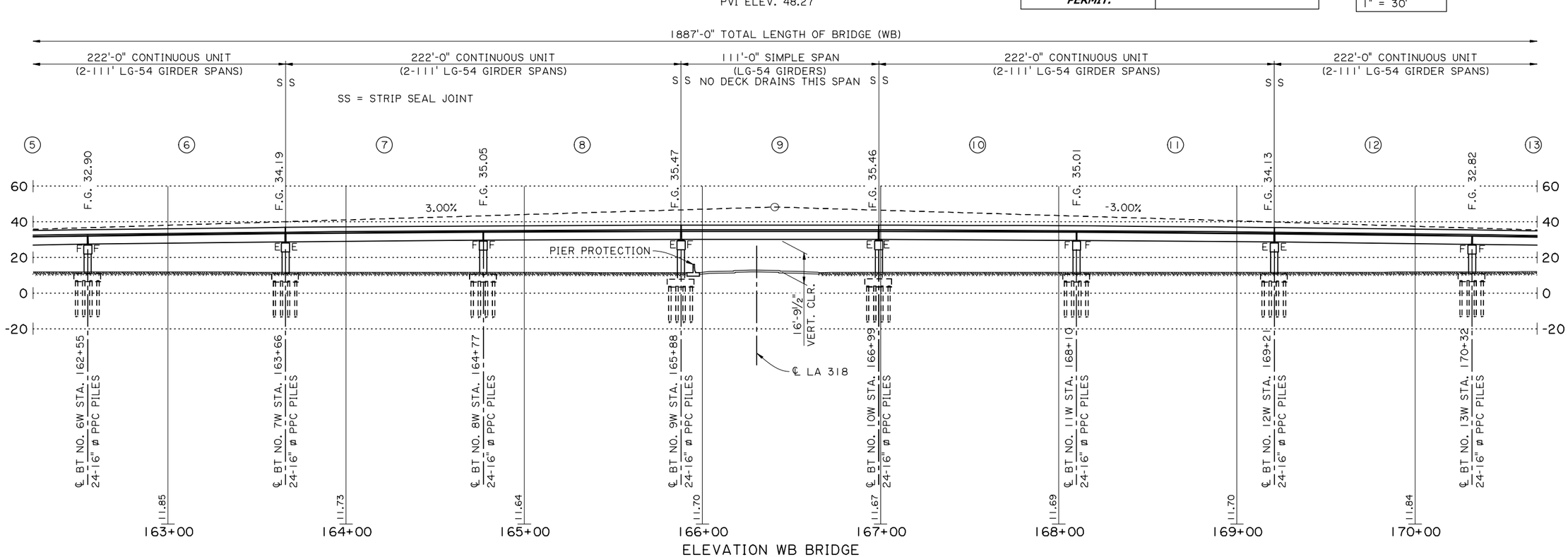

ELEVATION WB BRIDGE

SHEET NUMBER 102
PARISH ST. MARY
CONTROL SECTION 424-05, 239-31
STATE PROJECT H.004932
DESIGNED JAP
CHECKED AS
DETAILED PRG
CHECKED AS
REVIEWED JBJ
SERIES # 2 OF 6

DEFINITIVE DESIGN
DATE: 7-01-15

NO.	DATE	REVISION OR CHANGE ORDER DESCRIPTION	BY

GENERAL PLAN & ELEVATION
WESTBOUND BRIDGE

DEFINITIVE DESIGN: US 90 @ LA 318

Stantec

V:\2018\active\201802578\03 disciplines\structures\drawing\definitive design\102_GP_2 of 6.dgn 02-JUL-2015 07:53

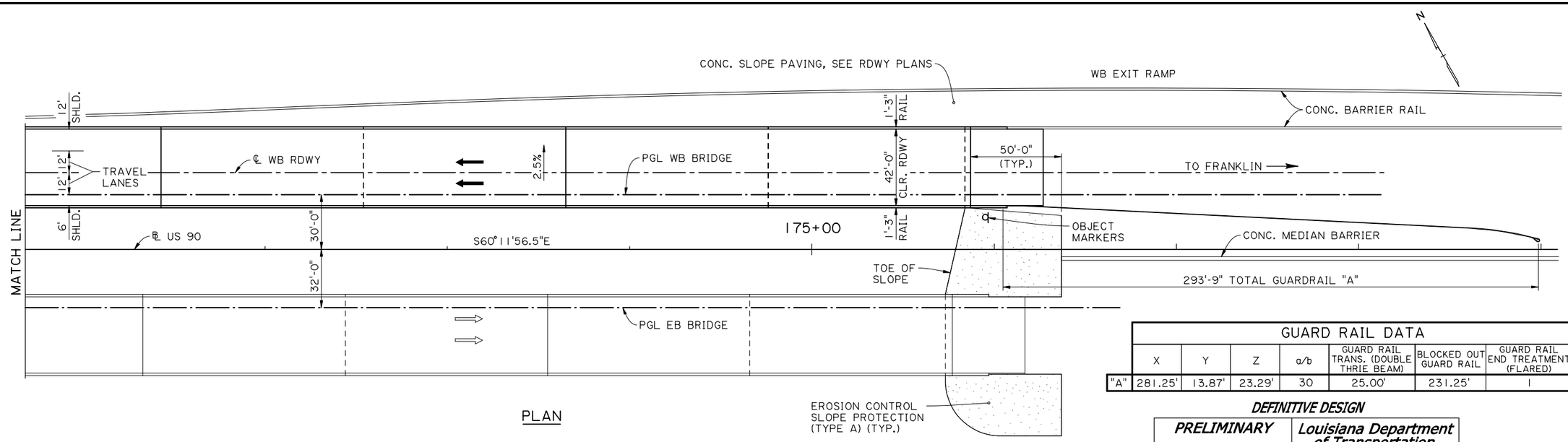

PLAN

SEE SHEET 1 OF 6 THIS SERIES FOR NOTES.

GUARD RAIL DATA							
	X	Y	Z	a/b	GUARD RAIL TRANS. (DOUBLE THRIE BEAM)	BLOCKED OUT GUARD RAIL	GUARD RAIL END TREATMENT (FLARED)
"A"	281.25'	13.87'	23.29'	30	25.00'	231.25'	1

DEFINITIVE DESIGN

PRELIMINARY

NOT TO BE USED FOR CONSTRUCTION, BIDDING, RECORDATION, CONVEYANCE, SALES OR AS THE BASIS FOR THE ISSUANCE OF A PERMIT.

Louisiana Department of Transportation and Development

ENGINEER: ARUNAVA SAHA

LICENSE #: 38334

DATE: JULY 2015

SS = STRIP SEAL JOINT

SHEET SCALE: 1" = 30'

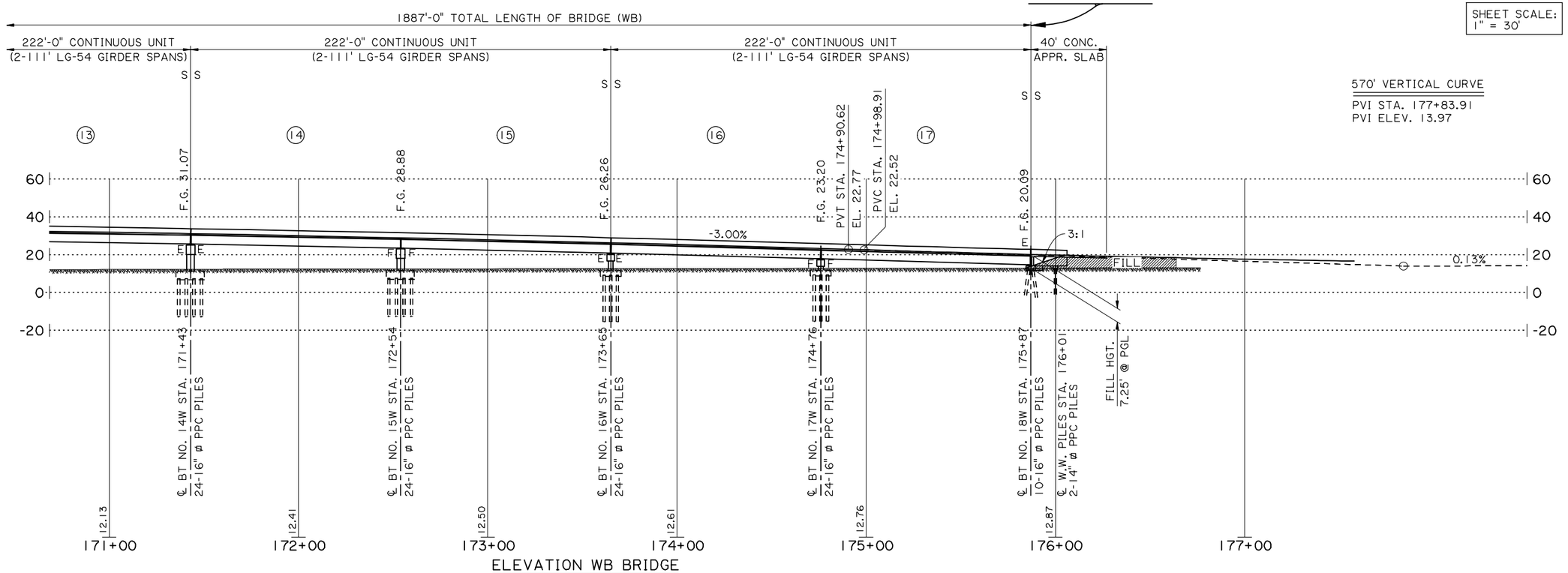

ELEVATION WB BRIDGE

SHEET NUMBER 103

PARISH: ST. MARY | CONTROL SECTION: 424-05, 239-31 | STATE PROJECT: H.004932

DESIGNED JAP | CHECKED AS | DETAILED PRG | CHECKED AS | REVIEWED JBJ | SERIES # 3 OF 6

DEFINITIVE DESIGN

DATE: 7-01-15

NO.	DATE	REVISION OR CHANGE ORDER DESCRIPTION	BY

GENERAL PLAN & ELEVATION
WESTBOUND BRIDGE

DEFINITIVE DESIGN: US 90 @ LA 318

Stantec

v:\2018\active\201802578\03 disciplines\structures\drawing\definitive design\103_GP_3 of 6.dgn 02-JUL-2015 07:53

07:53
02-JUL-2015
v:\2018\active\201802578\03 disciplines\structures\drawing\definitive design\104_GP_4 of 6.dgn

GUARD RAIL DATA							
	X	Y	Z	a/b	GUARD RAIL TRANS. (DOUBLE THRIE BEAM)	BLOCKED OUT GUARD RAIL	GUARD RAIL END TREATMENT (FLARED)
"A"	281.25'	13.87'	23.29'	30	25.00'	231.25'	1
"B"	175.00'	21.47'	31.31'	15	25.00'	125.00'	1

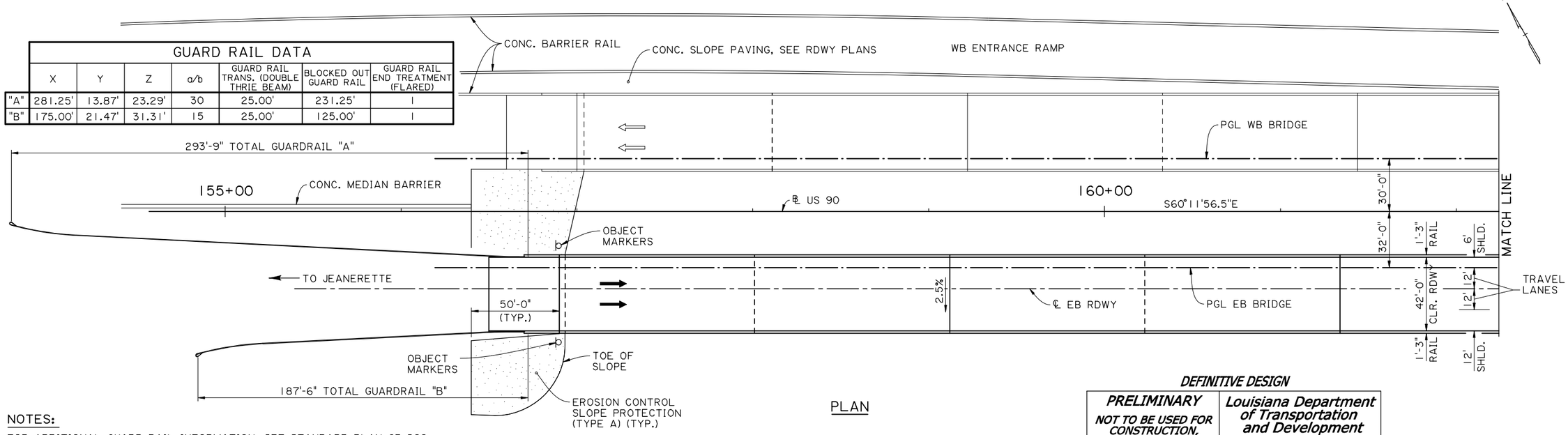

PLAN

NOTES:

FOR ADDITIONAL GUARD RAIL INFORMATION, SEE STANDARD PLAN GR-200.

FILL TO BE IN PLACE PRIOR TO DRIVING PILES AFFECTED.

REFER TO FOUNDATION PLAN FOR LOCATIONS OF PILES, TEST PILES, BORINGS, AND CPTS.

VERTICAL CURVE DATA, BRIDGE ELEVATIONS & BRIDGE STATIONS SHOWN ARE AT PGL EASTBOUND, US 90.

EASTBOUND PROFILE SHOWN. EXISTING GROUND LINE SHOWN IS AT EAST-BOUND PROFILE GRADE LINE.

FOR DECK DRAIN LAYOUT, SEE SPAN SHEETS.

FINAL PILE LENGTHS SHALL BE DETERMINED UPON COMPLETION OF TEST PILE.

SEE SHEET 113 FOR TYPICAL ABUTMENT SECTION.

DEFINITIVE DESIGN

PRELIMINARY	*Louisiana Department of Transportation and Development*
NOT TO BE USED FOR CONSTRUCTION, BIDDING, RECORDATION, CONVEYANCE, SALES OR AS THE BASIS FOR THE ISSUANCE OF A PERMIT.	*ENGINEER: ARUNAVA SAHA* *LICENSE #: 38334* *DATE: JULY 2015*

SHEET SCALE: 1" = 30'

BEGIN EB BRIDGE
END ROADWAY
STA. 156+90.00

SS = STRIP SEAL JOINT

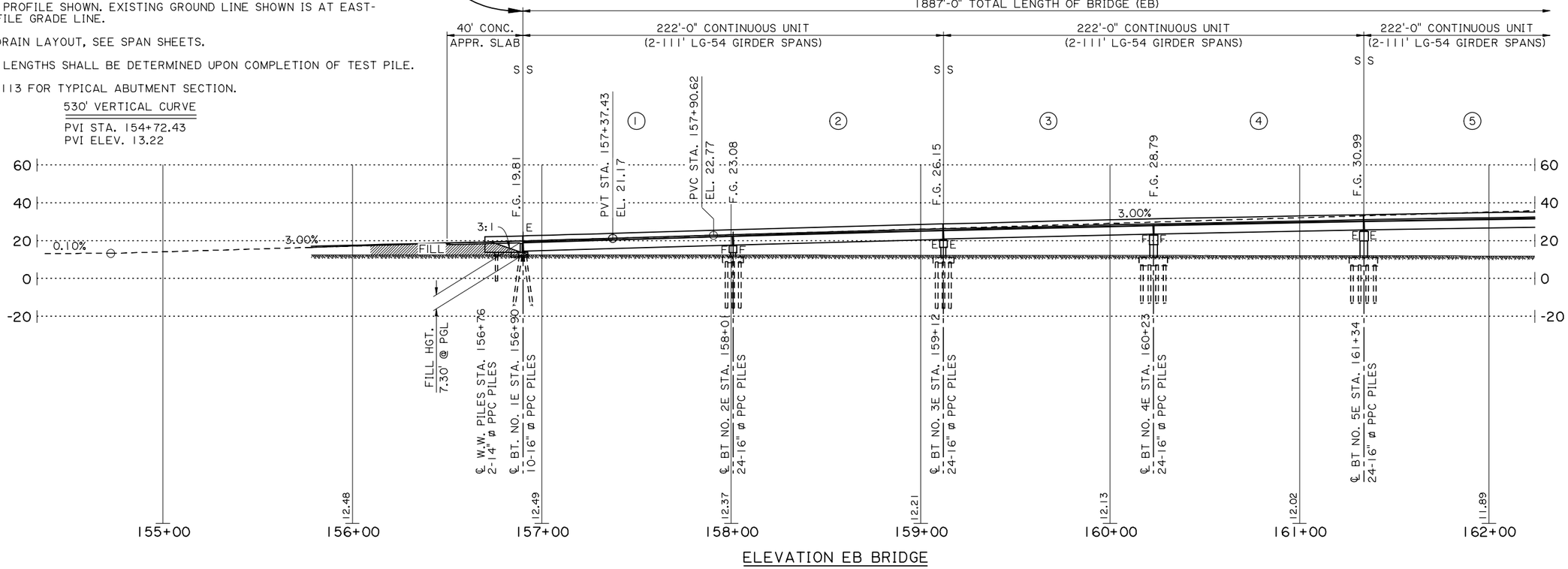

ELEVATION EB BRIDGE

SHEET NUMBER	104
PARISH	ST. MARY
CONTROL SECTION	424-05, 239-31
STATE PROJECT	H.004932
DESIGNED JAP CHECKED AS	
DETAILED PRG CHECKED AS	
REVIEWED JBJ SERIES # 4 OF 6	

DEFINITIVE DESIGN
DATE: 7-01-15

NO.	DATE	REVISION OR CHANGE ORDER DESCRIPTION	BY

GENERAL PLAN & ELEVATION
EASTBOUND BRIDGE

DEFINITIVE DESIGN; US 90 @ LA 318

Stantec

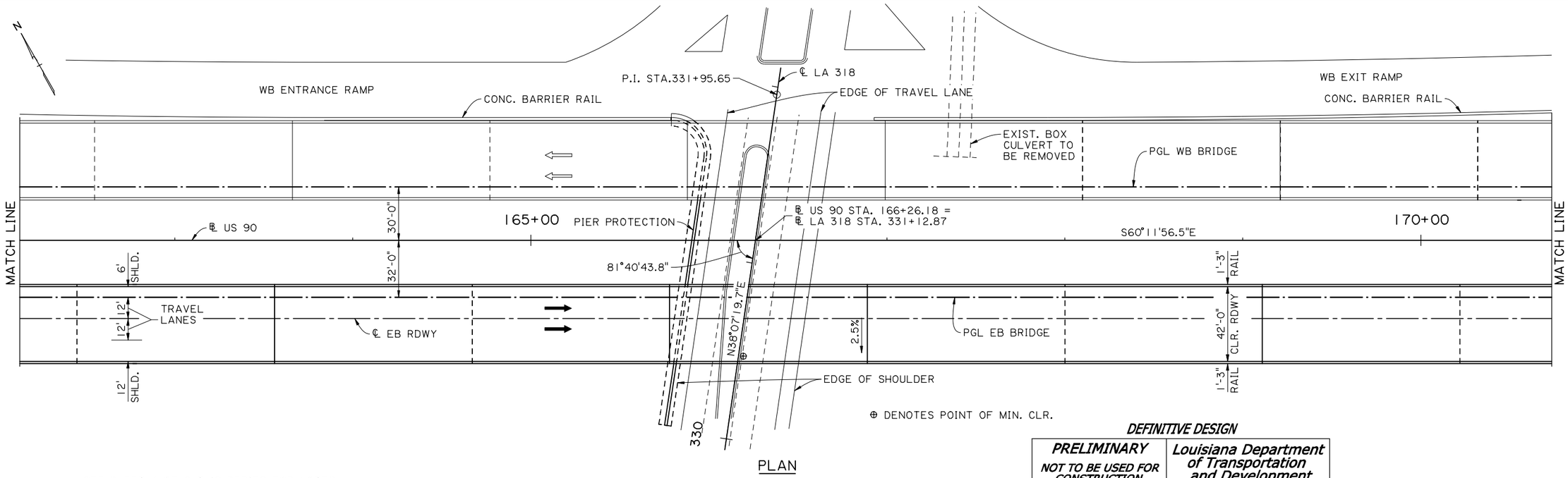

PLAN

SEE SHEET 4 OF 6 THIS SERIES FOR NOTES.

SEE SHEET 113 FOR PIER PROTECTION LAYOUT AND VERTICAL/HORIZONTAL CLEARANCES

1700' VERTICAL CURVE

PVI STA. 166+40.62
PVI ELEV. 48.27

DEFINITIVE DESIGN

PRELIMINARY

NOT TO BE USED FOR CONSTRUCTION, BIDDING, RECORDATION, CONVEYANCE, SALES OR AS THE BASIS FOR THE ISSUANCE OF A PERMIT.

Louisiana Department of Transportation and Development

ENGINEER: ARUNAVA SAHA
LICENSE #: 38334
DATE: JULY 2015

SHEET SCALE: 1" = 30'

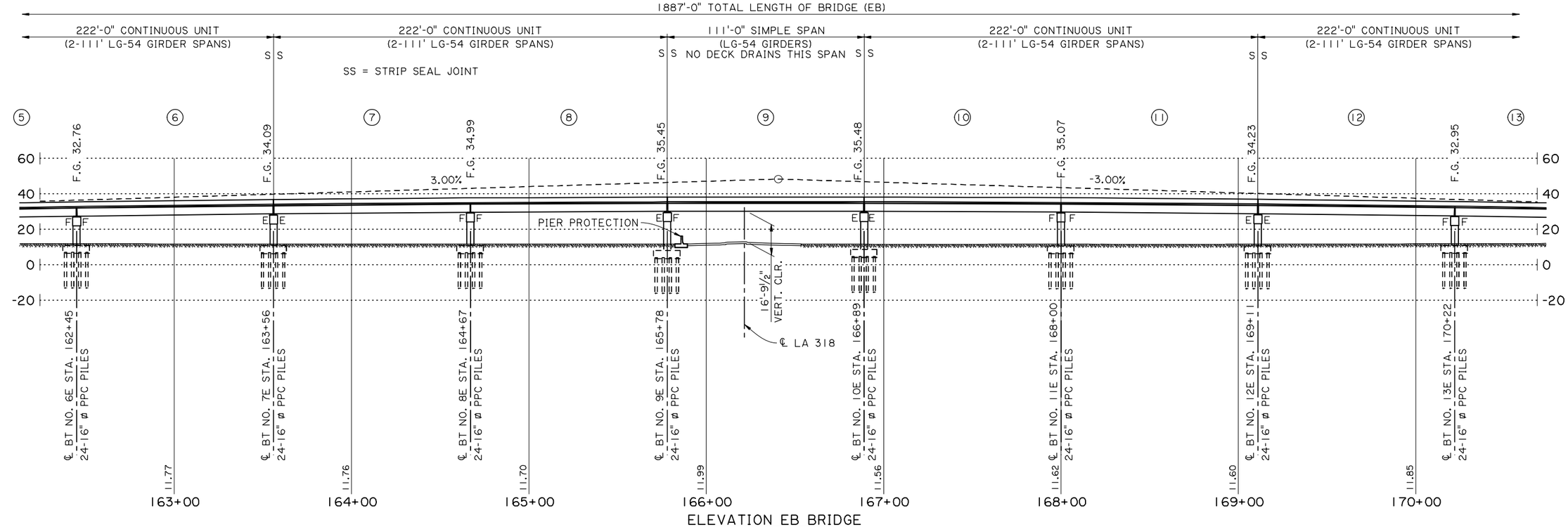

ELEVATION EB BRIDGE

SHEET NUMBER 105

PARISH: ST. MARY
CONTROL SECTION: 424-05, 239-31
STATE PROJECT: H.004932

DESIGNED JAP
CHECKED AS
DETAILED PRG
CHECKED AS
REVIEWED JBJ
SERIES # 5 OF 6

DEFINITIVE DESIGN
DATE: 7-01-15

NO. | DATE | REVISION OR CHANGE ORDER DESCRIPTION | BY

GENERAL PLAN & ELEVATION
EASTBOUND BRIDGE

DEFINITIVE DESIGN: US 90 @ LA 318

Stantec

07:53
02-JUL-2015
V:\2018\active\201802578\03 disciplines\structures\drawing\definitive design\105_GP_5 of 6.dgn

V:\2018\active\201802578\03 disciplines\structures\drawing\definitive design\106_GP_6 of 6.dgn 02-JUL-2015 07:53

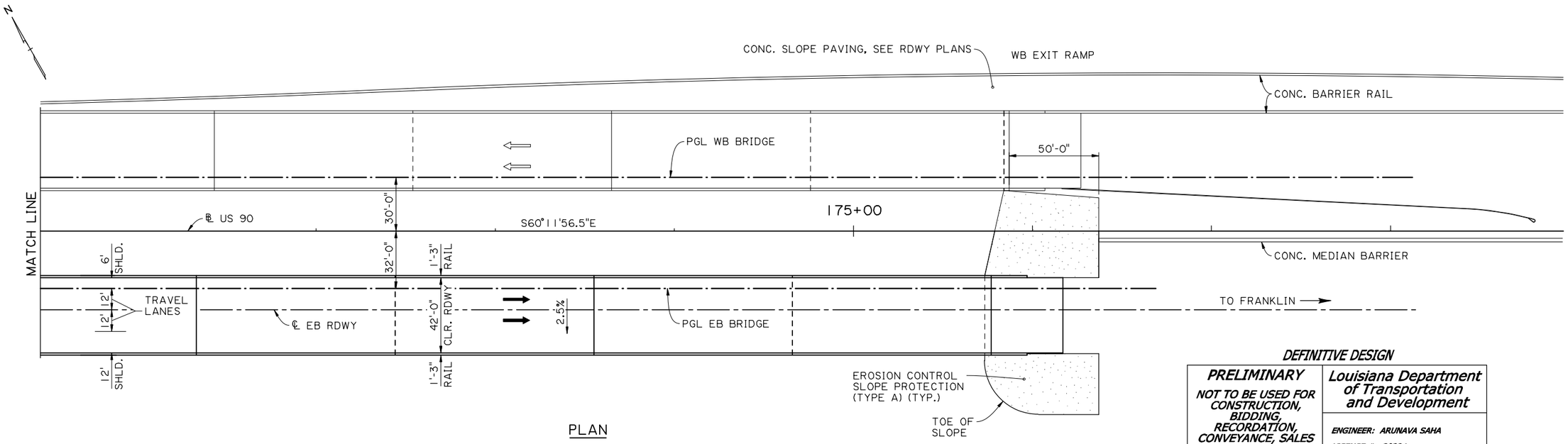

PLAN

SEE SHEET 4 OF 6 THIS SERIES FOR NOTES.

SS = STRIP SEAL JOINT

END EB BRIDGE
BEGIN ROADWAY
STA. 175+77.00

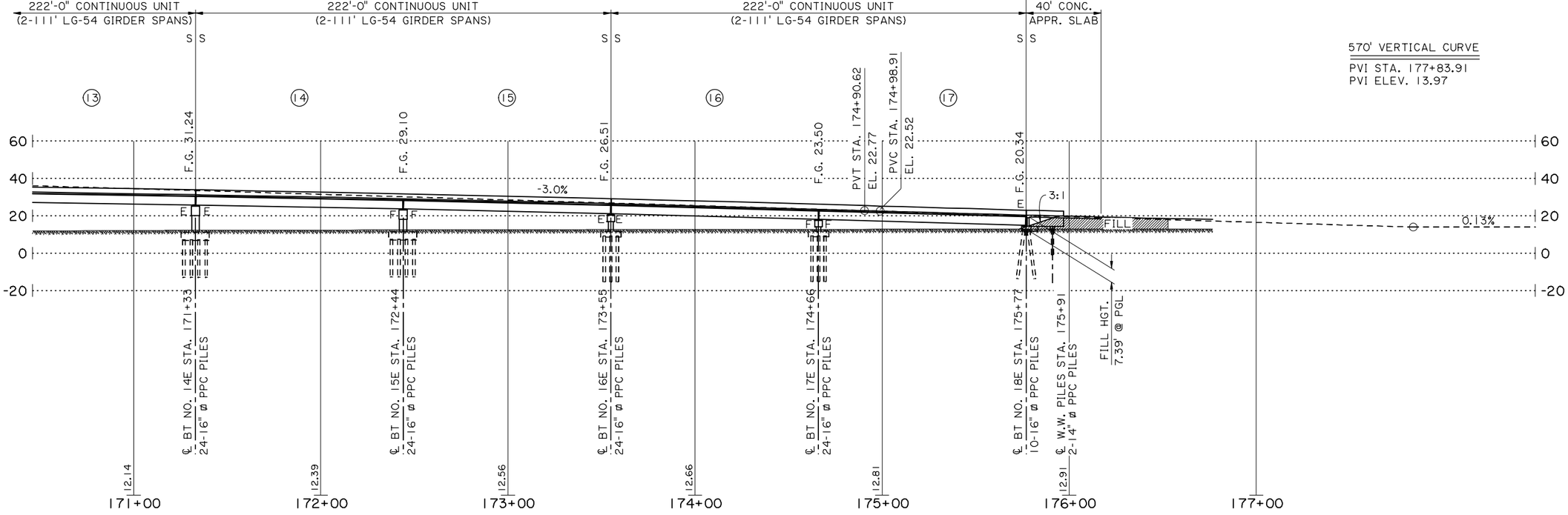

ELEVATION EB BRIDGE

DEFINITIVE DESIGN

PRELIMINARY

NOT TO BE USED FOR CONSTRUCTION, BIDDING, RECORDATION, CONVEYANCE, SALES OR AS THE BASIS FOR THE ISSUANCE OF A PERMIT.

Louisiana Department of Transportation and Development

ENGINEER: ARUNAVA SAHA

LICENSE #: 38334

DATE: JULY 2015

SHEET SCALE: 1" = 30'

SHEET NUMBER 106

PARISH: ST. MARY
CONTROL SECTION: 424-05, 239-31
STATE PROJECT: H.004932

DESIGNED JAP
CHECKED AS
DETAILED PRG
CHECKED AS
REVIEWED JBJ
SERIES # 6 OF 6

DEFINITIVE DESIGN
DATE: 7-01-15

NO. | DATE | REVISION OR CHANGE ORDER DESCRIPTION | BY

GENERAL PLAN & ELEVATION
EASTBOUND BRIDGE

DEFINITIVE DESIGN: US 90 @ LA 318

Stantec

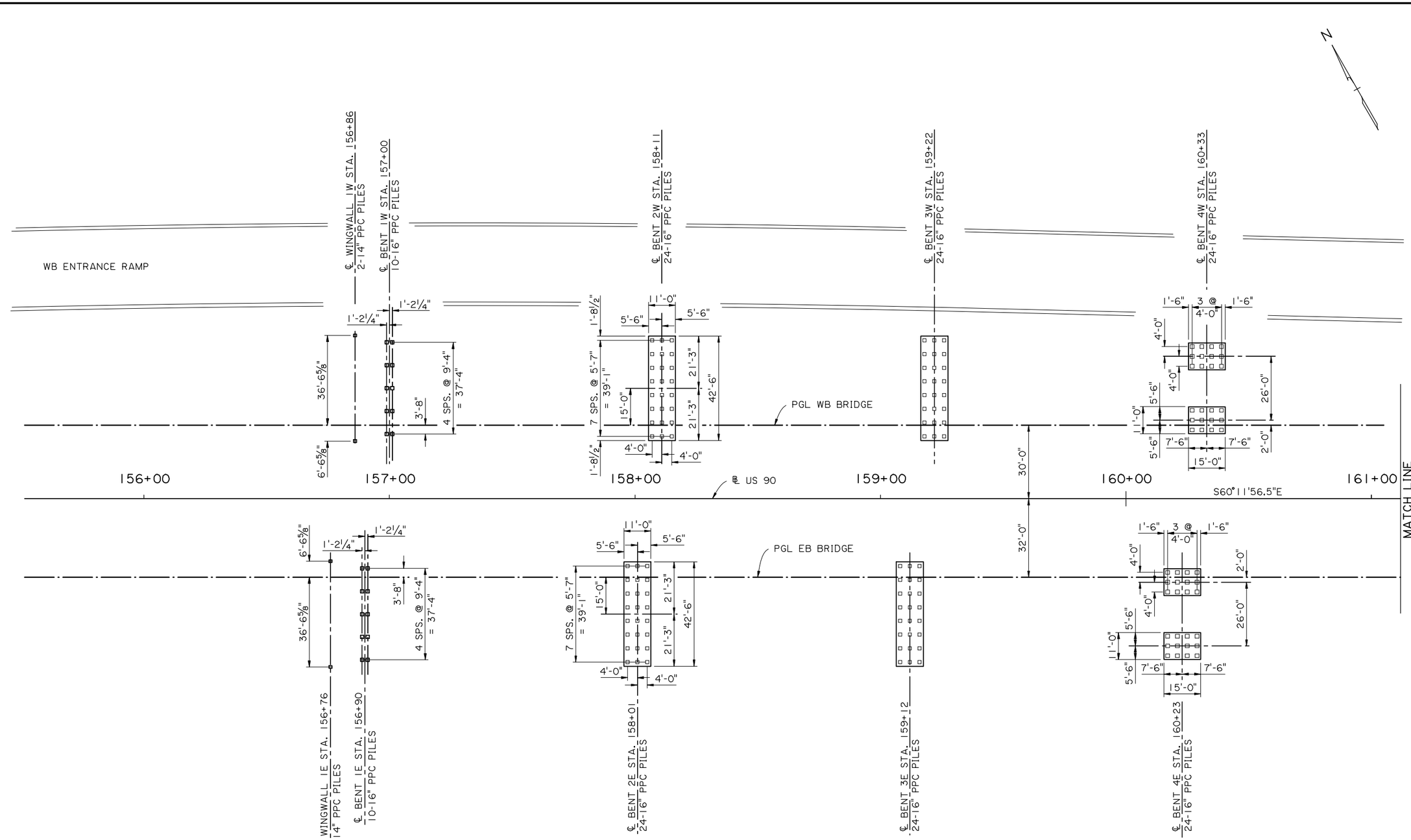

LEGEND

- BORING
- CPT
- TEST PILE

FOUNDATION LAYOUT

SCALE: 1"=20'

NOTES:

FOOTING & PILE LAYOUTS ARE TYPICAL EXCEPT AS SHOWN.

℄ BENTS ARE 90° TO PGL.

LOCATIONS OF BORINGS, CPTS, AND TEST PILES TO BE DETERMINED.

DEFINITIVE DESIGN

PRELIMINARY	*Louisiana Department of Transportation and Development*
NOT TO BE USED FOR CONSTRUCTION, BIDDING, RECORDATION, CONVEYANCE, SALES OR AS THE BASIS FOR THE ISSUANCE OF A PERMIT.	*ENGINEER: ARUNAVA SAHA* *LICENSE #: 38334* *DATE: JULY 2015*

SHEET NUMBER 107

PARISH: ST. MARY
CONTROL SECTION: 424-05, 239-31
STATE PROJECT: H.004932

DESIGNED JAP
CHECKED AS
DETAILED PRG
CHECKED AS
REVIEWED JBJ
SERIES # 1 OF 4

DEFINITIVE DESIGN
DATE: 7-01-15

NO. | DATE | REVISION OR CHANGE ORDER DESCRIPTION | BY

FOUNDATION PLAN

DEFINITIVE DESIGN: US 90 @ LA 318

Stantec

V:\2018\active\201802578\03 disciplines\structures\drawing\definitive design\107_Foundation Layout 1 of 4.dgn 02-JUL-2015 07:54

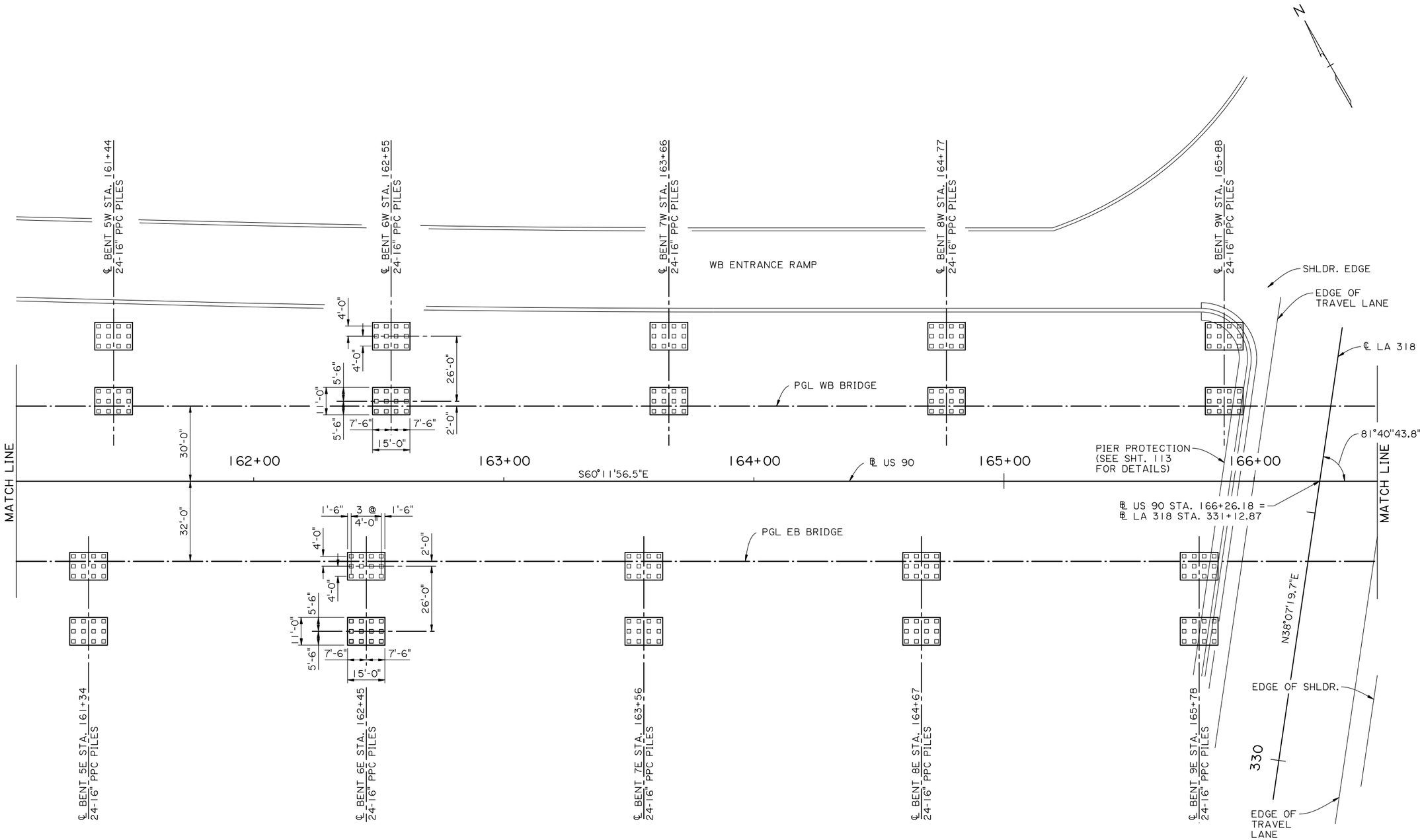

FOUNDATION LAYOUT

SCALE: 1"=20'

LEGEND

- BORING
- CPT
- TEST PILE

NOTES:

FOOTING & PILE LAYOUTS ARE TYPICAL EXCEPT AS SHOWN.

℄ BENTS ARE 90° TO PGL.

LOCATIONS OF BORINGS, CPTS, AND TEST PILES TO BE DETERMINED.

DEFINITIVE DESIGN

PRELIMINARY	***Louisiana Department of Transportation and Development***
NOT TO BE USED FOR CONSTRUCTION, BIDDING, RECORDATION, CONVEYANCE, SALES OR AS THE BASIS FOR THE ISSUANCE OF A PERMIT.	***ENGINEER: ARUNAVA SAHA*** ***LICENSE #: 38334*** ***DATE: JULY 2015***

SHEET NUMBER 108

PARISH	CONTROL SECTION	STATE PROJECT
ST. MARY	424-05, 239-31	H.004932

DESIGNED JAP
CHECKED AS
DETAILED PRG
CHECKED AS
REVIEWED JBJ
SERIES # 2 OF 4

DEFINITIVE DESIGN
DATE: 7-01-15

NO.	DATE	REVISION OR CHANGE ORDER DESCRIPTION	BY

FOUNDATION PLAN

DEFINITIVE DESIGN: US 90 @ LA 318

Stantec

V:\2018\active\201802578\03 disciplines\structures\drawing\definitive design\108_Foundation Layout 2 of 4.dgn 02-JUL-2015 07:54

v:\2018\active\201802578\03 disciplines\structures\drawing\definitive design\109_Foundation Layout 3 of 4.dgn 02-JUL-2015 07:54

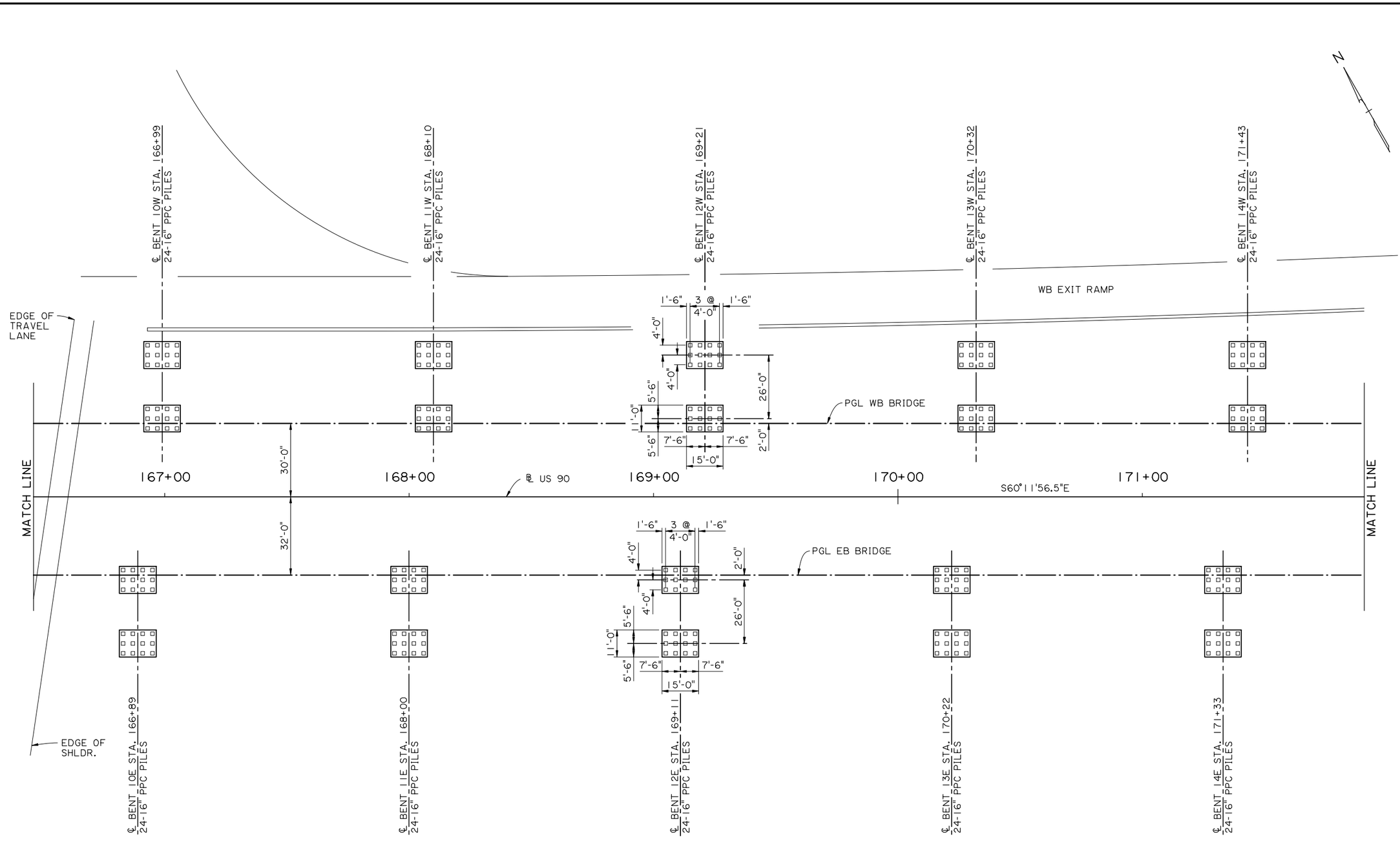

FOUNDATION LAYOUT

SCALE: 1"=20'

LEGEND

- BORING
- CPT
- TEST PILE

NOTES:

FOOTING & PILE LAYOUTS ARE TYPICAL EXCEPT AS SHOWN.

℄ BENTS ARE 90° TO PGL.

LOCATIONS OF BORINGS, CPTS, AND TEST PILES TO BE DETERMINED.

DEFINITIVE DESIGN

PRELIMINARY	*Louisiana Department of Transportation and Development*
NOT TO BE USED FOR CONSTRUCTION, BIDDING, RECORDATION, CONVEYANCE, SALES OR AS THE BASIS FOR THE ISSUANCE OF A PERMIT.	*ENGINEER: ARUNAVA SAHA* *LICENSE #: 38334* *DATE: JULY 2015*

SHEET NUMBER 109

PARISH	CONTROL SECTION	STATE PROJECT
ST. MARY	424-05, 239-31	H.004932

DESIGNED JAP CHECKED AS
DETAILED PRG CHECKED AS
REVIEWED JBJ SERIES # 3 OF 4

DEFINITIVE DESIGN
DATE: 7-01-15

NO.	DATE	REVISION OR CHANGE ORDER DESCRIPTION	BY

FOUNDATION PLAN

DEFINITIVE DESIGN: US 90 @ LA 318

Stantec

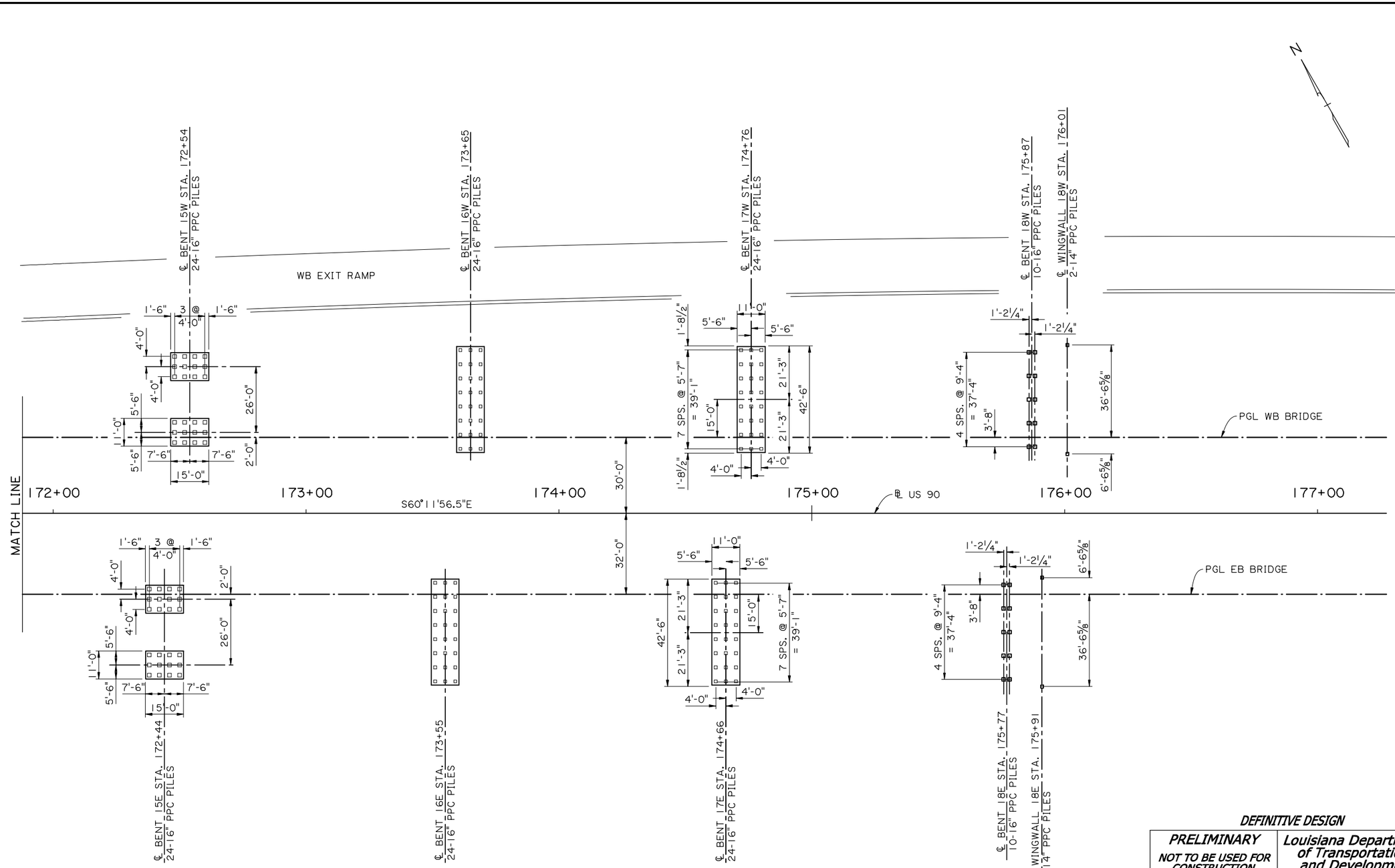

FOUNDATION LAYOUT
SCALE: 1"=20'

LEGEND
- BORING
- CPT
- TEST PILE

NOTES:
FOOTING & PILE LAYOUTS ARE TYPICAL EXCEPT AS SHOWN.
℄ BENTS ARE 90° TO PGL.
LOCATIONS OF BORINGS, CPTS, AND TEST PILES TO BE DETERMINED.

DEFINITIVE DESIGN

PRELIMINARY	Louisiana Department of Transportation and Development
NOT TO BE USED FOR CONSTRUCTION, BIDDING, RECORDATION, CONVEYANCE, SALES OR AS THE BASIS FOR THE ISSUANCE OF A PERMIT.	ENGINEER: ARUNAVA SAHA LICENSE #: 38334 DATE: JULY 2015

SHEET NUMBER 110

DESIGNED JAP	PARISH ST. MARY	
CHECKED AS		
DETAILED PRG	CONTROL SECTION 424-05, 239-31	
CHECKED AS		
REVIEWED JBJ	STATE PROJECT H.004932	
SERIES # 4 OF 4		

DEFINITIVE DESIGN

NO.	DATE	REVISION OR CHANGE ORDER DESCRIPTION	BY

FOUNDATION LAYOUT

DEFINITIVE DESIGN: US 90 @ LA 318

Stantec

V:\2018\active\201802578\03 disciplines\structures\drawing\definitive design\110 Foundation Layout 4 of 4.dgn 02-JUL-2015 07:54

V:\2018\active\201802578\03 disciplines\structures\drawing\definitive design\111_Typical Sections_Pile Wall.dgn 02-JUL-2015 07:54

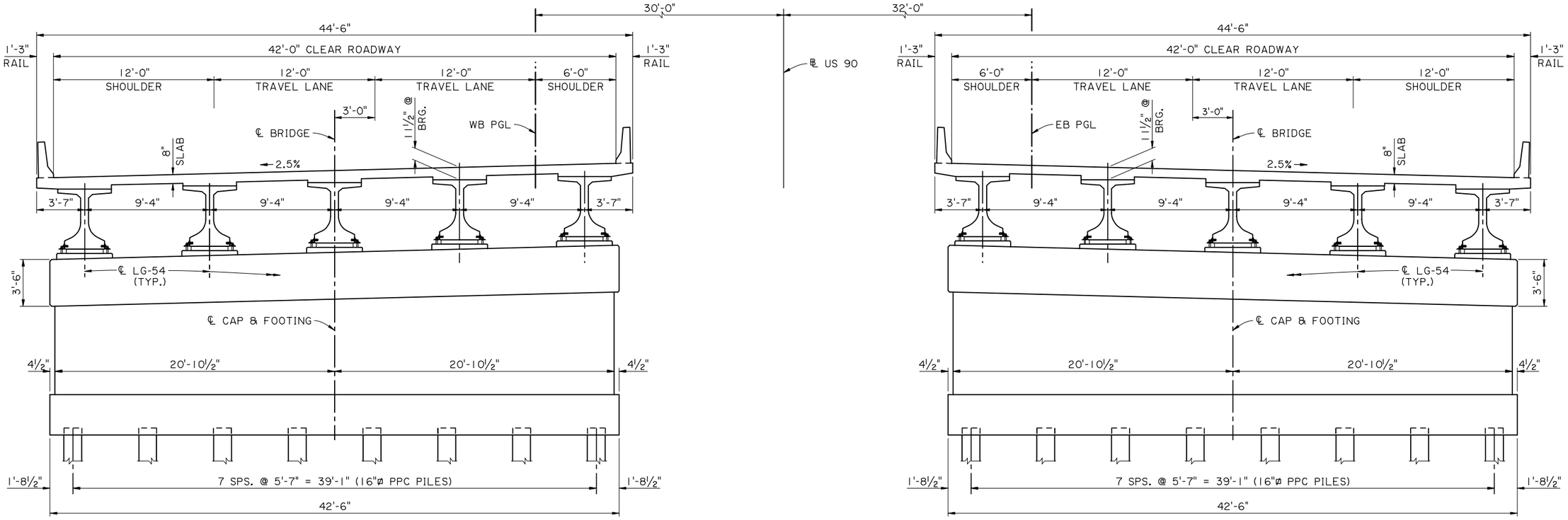

TYPICAL SECTION AT PIER WALL BENTS 2W/E, 3W/E, 16W/E, & 17W/E

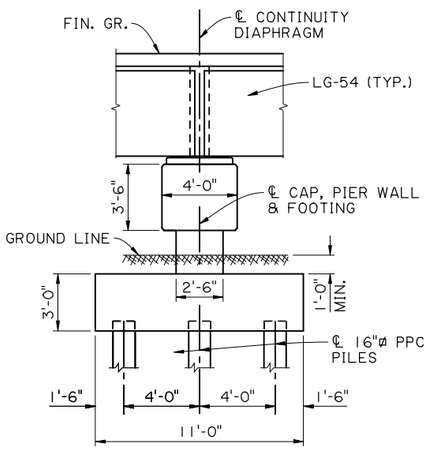

ELEVATION AT PIER WALL BENTS 2W/E & 17W/E

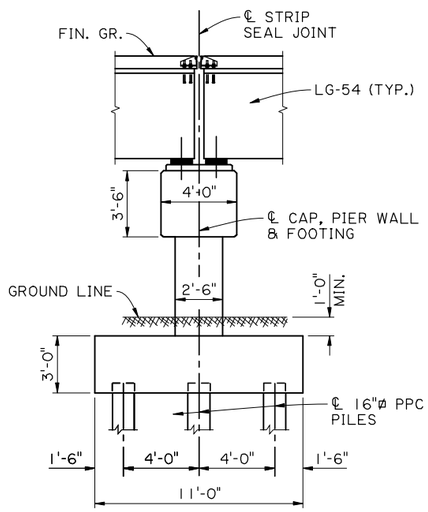

ELEVATION AT PIER WALL BENTS 3W/E & 16W/E

DEFINITIVE DESIGN

PRELIMINARY	*Louisiana Department of Transportation and Development*
NOT TO BE USED FOR CONSTRUCTION, BIDDING, RECORDATION, CONVEYANCE, SALES OR AS THE BASIS FOR THE ISSUANCE OF A PERMIT.	*ENGINEER: ARUNAVA SAHA* *LICENSE #: 38334* *DATE: JULY 2015*

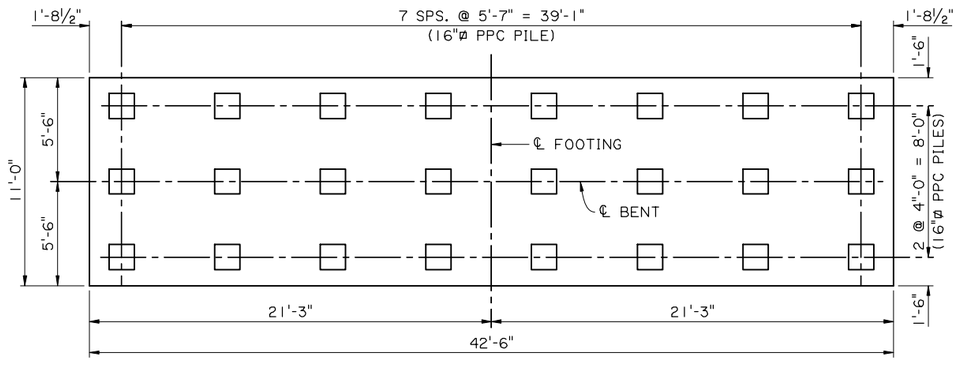

TYPICAL FOOTING LAYOUT

SHEET NUMBER 111

PARISH	CONTROL SECTION	STATE PROJECT
ST. MARY	424-05, 239-31	H.004932

DESIGNED JAP CHECKED AS
DETAILED PRG CHECKED AS
REVIEWED JBJ SERIES #

DEFINITIVE DESIGN
DATE: 7-01-15

NO.	DATE	REVISION OR CHANGE ORDER DESCRIPTION	BY

TYPICAL SECTION AT PIER WALL BENTS

DEFINITIVE DESIGN: US 90 @ LA 318

Stantec

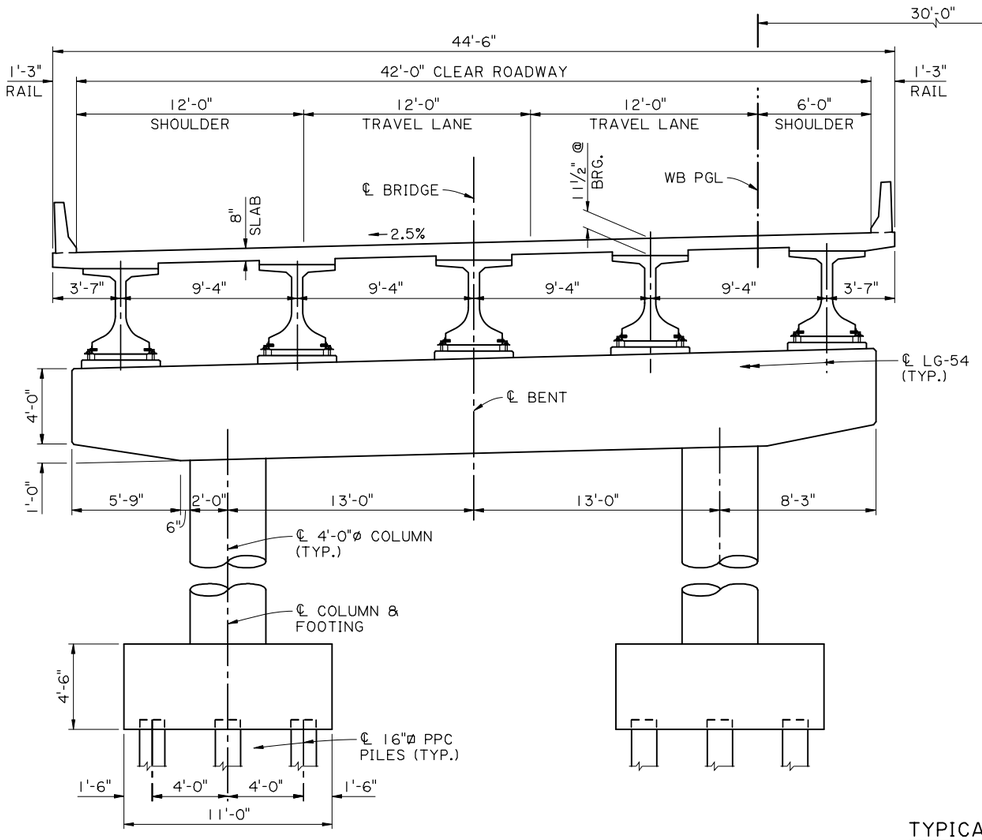

TYPICAL SECTION AT COLUMN BENT

(BENTS 4W/E THRU 15W/E)

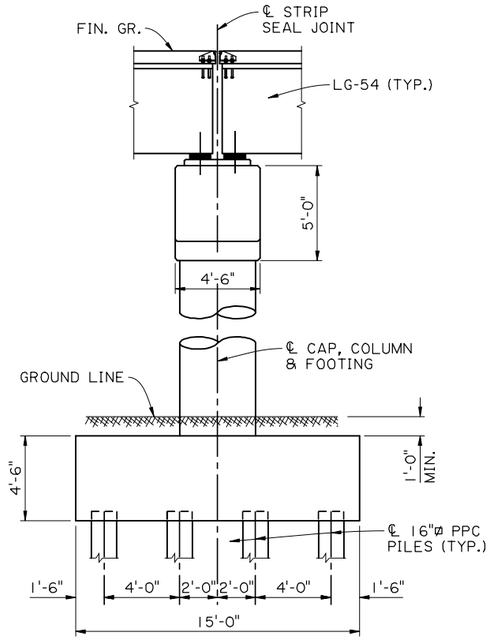

ELEVATION AT TYPICAL EXPANSION BENT

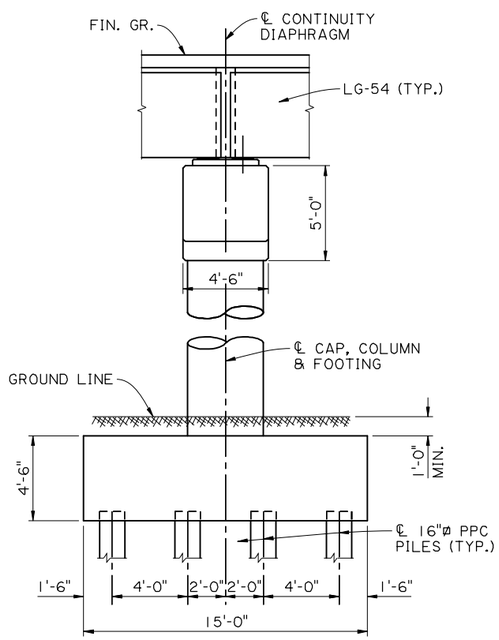

ELEVATION AT TYPICAL FIXED BENT

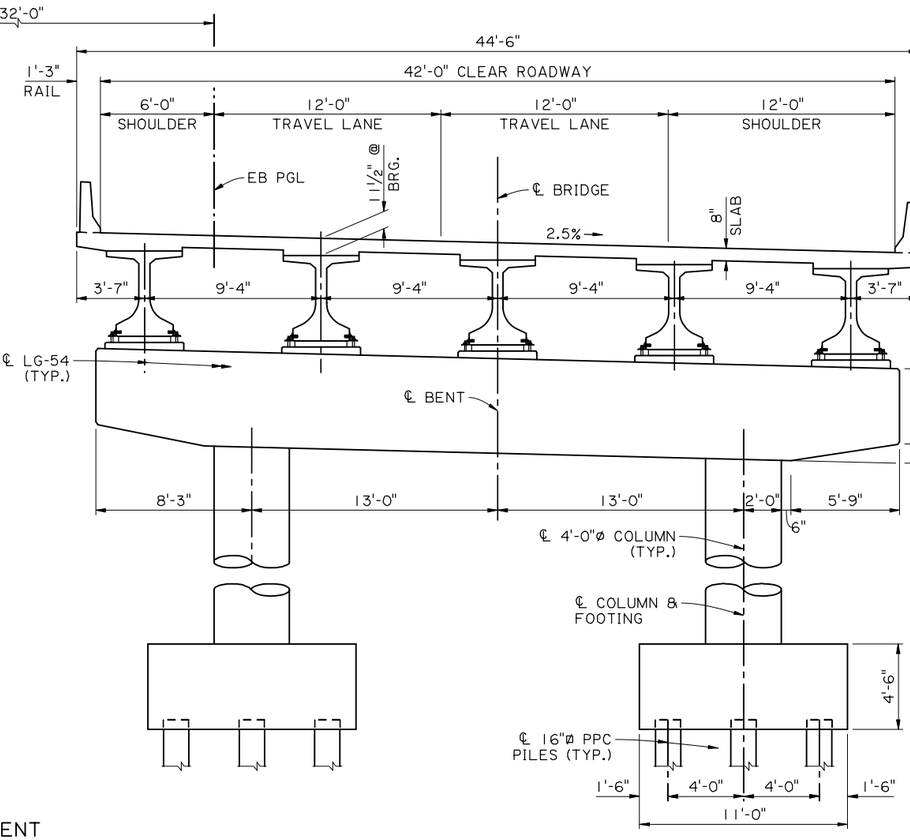

DEFINITIVE DESIGN

PRELIMINARY	***Louisiana Department of Transportation and Development***
NOT TO BE USED FOR CONSTRUCTION, BIDDING, RECORDATION, CONVEYANCE, SALES OR AS THE BASIS FOR THE ISSUANCE OF A PERMIT.	***ENGINEER: ARUNAVA SAHA*** ***LICENSE #: 38334*** ***DATE: JULY 2015***

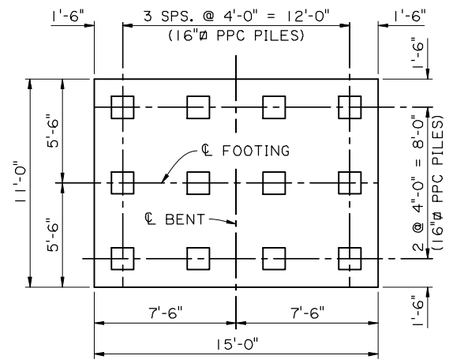

TYPICAL FOOTING LAYOUT

SHEET NUMBER	112
PARISH	ST. MARY
CONTROL SECTION	424-05, 239-31
STATE PROJECT	H.004932
DESIGNED JAP / CHECKED AS	
DETAILED PRG / CHECKED AS	
REVIEWED JBJ / SERIES #	

DEFINITIVE DESIGN
DATE: 7-01-15

NO.	DATE	REVISION OR CHANGE ORDER DESCRIPTION	BY

TYPICAL SECTION AT COLUMN BENTS

DEFINITIVE DESIGN: US 90 @ LA 318

Stantec

V:\2018\active\201802578\03 disciplines\structures\drawing\definitive design\112_Typical Sections_Column Bent.dgn 02-JUL-2015 07:54

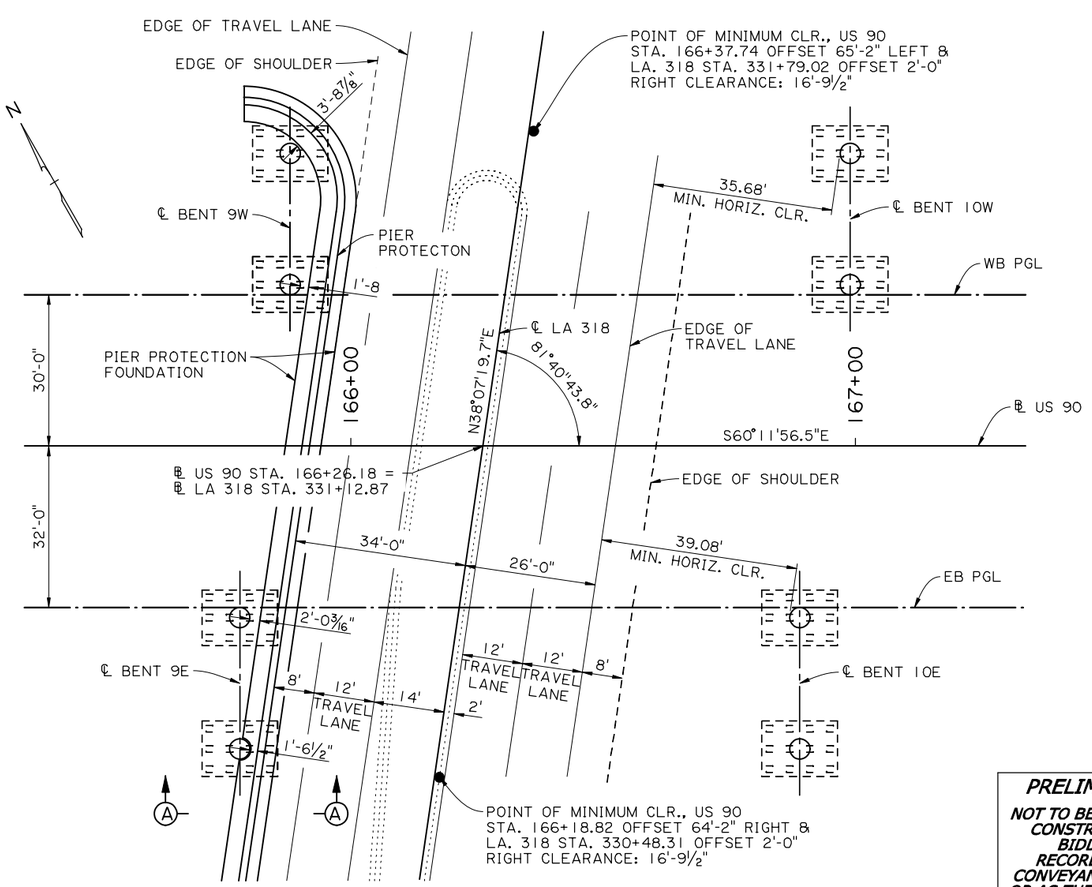

PARTIAL PLAN AT US 90 OVER LA 318

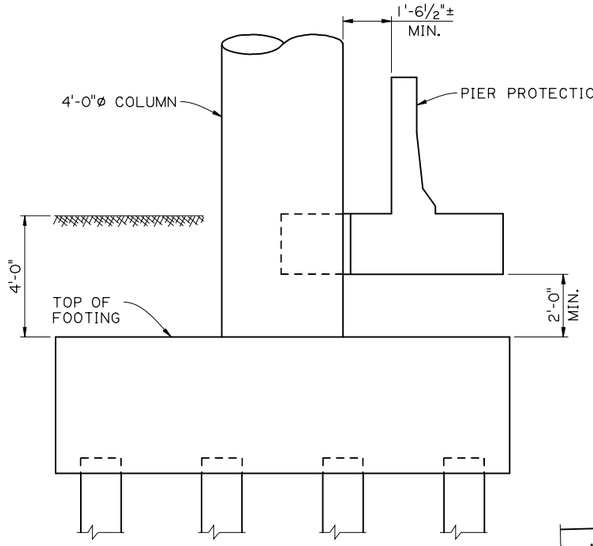

SECTION A-A

DEFINITIVE DESIGN

PRELIMINARY	***Louisiana Department of Transportation and Development***
NOT TO BE USED FOR CONSTRUCTION, BIDDING, RECORDATION, CONVEYANCE, SALES OR AS THE BASIS FOR THE ISSUANCE OF A PERMIT.	***ENGINEER: ARUNAVA SAHA*** ***LICENSE #: 38334*** ***DATE: JULY 2015***

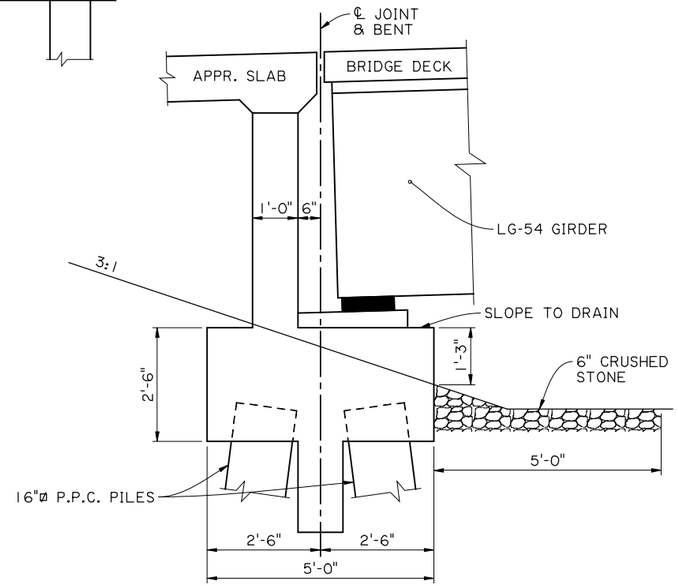

TYPICAL ABUTMENT SECTION

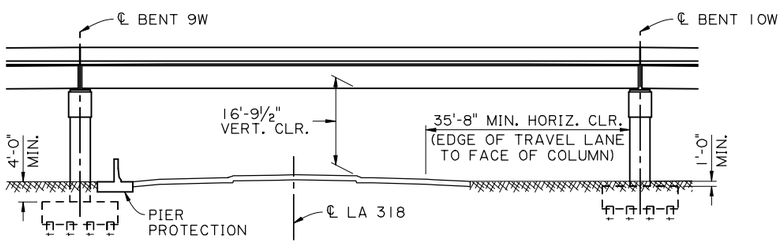

ELEVATION ALONG US 90 WB PGL AT LA 318

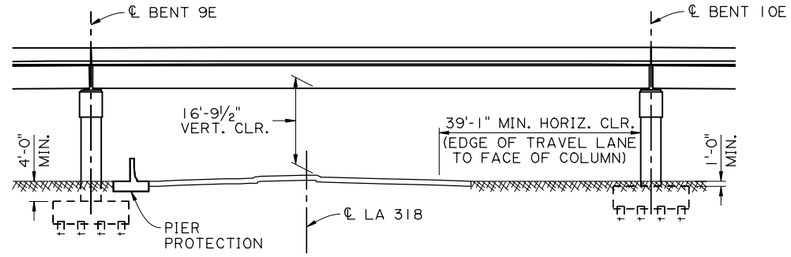

ELEVATION ALONG US 90 EB PGL AT LA 318

SHEET NUMBER 113

PARISH	CONTROL SECTION	STATE PROJECT
ST. MARY	424-05, 239-31	H.004932

DESIGNED JAP
CHECKED AS
DETAILED PRG
CHECKED AS
REVIEWED JBJ
SERIES #

DEFINITIVE DESIGN
DATE: 7-01-15

NO. | DATE | REVISION OR CHANGE ORDER DESCRIPTION | BY

PIER PROTECTION, CLEARANCE DETAILS, & ABUTMENT DETAILS

DEFINITIVE DESIGN: US 90 @ LA 318

Stantec

v:\2018\active\2018025781\03 disciplines\structures\drawing\definitive design\113_Clearance Details.dgn 02-JUL-2015 07:5

APPENDIX B

US-90 / LA-318 INTERCHANGE	
6/17/2015	
H.004932	
US 90 Interchange Cost Estimate Summary	
ITEM	**COST**
DB CONSTRUCTION TOTAL	**$ 55,718,841**
LA DOTD COST	
SUE	**$ 25,000**
GEOTECHNICAL ENGINEERING	**$ 360,075**
SURVEY	**$ 594,794**
UTILTIY	**$ 1,000,000**
ROW COST (LAND AND RELOCATION)	**$ 5,500,000**
PROCUREMENT CONTRACT	**$ 300,000**
CE&I SERVICES	**$ 3,602,190**
TOTAL LA DOTD COST	**$ 11,382,059**
Contingency (10%)	**$ 5,571,884**
TOTAL PROJECT COST	**$ 72,672,784**
Old Estimate	**$ 75,707,869**
Differnce	**$ 3,035,085**

APPENDIX C

U.S. DEPARTMENT OF AGRICULTURE
Natural Resources Conservation Service

NRCS-CPA-106
(Rev. 1-91)

FARMLAND CONVERSION IMPACT RATING FOR CORRIDOR TYPE PROJECTS

PART I *(To be completed by Federal Agency)*	3. Date of Land Evaluation Request 7/29/15	4. Sheet 1 of _____
1. Name of Project **US 90 at LA 318 Interchange (ATC)**	5. Federal Agency Involved **FHWA**	
2. Type of Project **Road Construction**	6. County and State **St. Mary Parish, Louisiana**	

PART II *(To be completed by NRCS)*	1. Date Request Received by NRCS 8/5/15	2. Person Completing Form M. Mouton
3. Does the corridor contain prime, unique statewide or local important farmland? (If no, the FPPA does not apply - Do not complete additional parts of this form) YES ☑ NO ☐		4. Acres Irrigated 0 / Average Farm Size 807
5. Major Crop(s) Sugarcane and Soybean	6. Farmable Land in Government Jurisdiction Acres: 127,963 32 %	7. Amount of Farmland As Defined in FPPA Acres: 118,654 29 %
8. Name Of Land Evaluation System Used St. Mary LESA	9. Name of Local Site Assessment System N/A	10. Date Land Evaluation Returned by NRCS 8/10/15

PART III *(To be completed by Federal Agency)*	Alternative Corridor For Segment _____			
	Corridor A	Corridor B	Corridor C	Corridor D
A. Total Acres To Be Converted Directly	60.2			
B. Total Acres To Be Converted Indirectly, Or To Receive Services				
C. Total Acres In Corridor	60.2			
PART IV *(To be completed by NRCS) Land Evaluation Information*				
A. Total Acres Prime And Unique Farmland	58.8			
B. Total Acres Statewide And Local Important Farmland				
C. Percentage Of Farmland in County Or Local Govt. Unit To Be Converted	.0004			
D. Percentage Of Farmland in Govt. Jurisdiction With Same Or Higher Relative Value	28.4			
PART V *(To be completed by NRCS) Land Evaluation Information Criterion Relative value of Farmland to Be Serviced or Converted (Scale of 0 - 100 Points)*	83			
PART VI *(To be completed by Federal Agency) Corridor Assessment Criteria (These criteria are explained in 7 CFR 658.5(c))* — Maximum Points				
1. Area in Nonurban Use — 15				
2. Perimeter in Nonurban Use — 10				
3. Percent Of Corridor Being Farmed — 20				
4. Protection Provided By State And Local Government — 20				
5. Size of Present Farm Unit Compared To Average — 10				
6. Creation Of Nonfarmable Farmland — 25				
7. Availablility Of Farm Support Services — 5				
8. On-Farm Investments — 20				
9. Effects Of Conversion On Farm Support Services — 25				
10. Compatibility With Existing Agricultural Use — 10				
TOTAL CORRIDOR ASSESSMENT POINTS — 160	0	0	0	0
PART VII *(To be completed by Federal Agency)*				
Relative Value Of Farmland (From Part V) — 100	83	0	0	0
Total Corridor Assessment (From Part VI above or a local site assessment) — 160	0	0	0	0
TOTAL POINTS *(Total of above 2 lines)* — 260	83	0	0	0

1. Corridor Selected:	2. Total Acres of Farmlands to be Converted by Project:	3. Date Of Selection:	4. Was A Local Site Assessment Used? YES ☐ NO ☐

5. Reason For Selection:

Signature of Person Completing this Part: | DATE

NOTE: Complete a form for each segment with more than one Alternate Corridor

CORRIDOR - TYPE SITE ASSESSMENT CRITERIA

The following criteria are to be used for projects that have a linear or corridor - type site configuration connecting two distant points, and crossing several different tracts of land. These include utility lines, highways, railroads, stream improvements, and flood control systems. Federal agencies are to assess the suitability of each corridor - type site or design alternative for protection as farmland along with the land evaluation information.

(1) How much land is in nonurban use within a radius of 1.0 mile from where the project is intended?
More than 90 percent - 15 points
90 to 20 percent - 14 to 1 point(s)
Less than 20 percent - 0 points

(2) How much of the perimeter of the site borders on land in nonurban use?
More than 90 percent - 10 points
90 to 20 percent - 9 to 1 point(s)
Less than 20 percent - 0 points

(3) How much of the site has been farmed (managed for a scheduled harvest or timber activity) more than five of the last 10 years?
More than 90 percent - 20 points
90 to 20 percent - 19 to 1 point(s)
Less than 20 percent - 0 points

(4) Is the site subject to state or unit of local government policies or programs to protect farmland or covered by private programs to protect farmland?
Site is protected - 20 points
Site is not protected - 0 points

(5) Is the farm unit(s) containing the site (before the project) as large as the average - size farming unit in the County ? (Average farm sizes in each county are available from the NRCS field offices in each state. Data are from the latest available Census of Agriculture, Acreage or Farm Units in Operation with $1,000 or more in sales.)
As large or larger - 10 points
Below average - deduct 1 point for each 5 percent below the average, down to 0 points if 50 percent or more below average - 9 to 0 points

(6) If the site is chosen for the project, how much of the remaining land on the farm will become non-farmable because of interference with land patterns?
Acreage equal to more than 25 percent of acres directly converted by the project - 25 points
Acreage equal to between 25 and 5 percent of the acres directly converted by the project - 1 to 24 point(s)
Acreage equal to less than 5 percent of the acres directly converted by the project - 0 points

(7) Does the site have available adequate supply of farm support services and markets, i.e., farm suppliers, equipment dealers, processing and storage facilities and farmer's markets?
All required services are available - 5 points
Some required services are available - 4 to 1 point(s)
No required services are available - 0 points

(8) Does the site have substantial and well-maintained on-farm investments such as barns, other storage building, fruit trees and vines, field terraces, drainage, irrigation, waterways, or other soil and water conservation measures?
High amount of on-farm investment - 20 points
Moderate amount of on-farm investment - 19 to 1 point(s)
No on-farm investment - 0 points

(9) Would the project at this site, by converting farmland to nonagricultural use, reduce the demand for farm support services so as to jeopardize the continued existence of these support services and thus, the viability of the farms remaining in the area?
Substantial reduction in demand for support services if the site is converted - 25 points
Some reduction in demand for support services if the site is converted - 1 to 24 point(s)
No significant reduction in demand for support services if the site is converted - 0 points

(10) Is the kind and intensity of the proposed use of the site sufficiently incompatible with agriculture that it is likely to contribute to the eventual conversion of surrounding farmland to nonagricultural use?
Proposed project is incompatible to existing agricultural use of surrounding farmland - 10 points
Proposed project is tolerable to existing agricultural use of surrounding farmland - 9 to 1 point(s)
Proposed project is fully compatible with existing agricultural use of surrounding farmland - 0 points

APPENDIX D

AECOM
125 Broad Street, 16th Floor, New York, NY 10004
T 212.377.8400 F 212.377.8410 www.aecom.com

Memorandum

Date:	September 24, 2015
To:	Tom Hunter
From:	Matthew Shriffer, Tom Herzog
Subject:	LDOTD Route 318 Interchange Project Noise Barrier Results, ATC
Cc:	Louis Costa, Jonathan Martinez, Tom Hunter

Attached are the modeling results for the noise barriers associated with the revised "ATC" design of the LA 318 Interchange project in Jeanerette, LA.

This submittal reflects responses to comments received from DOTD on August 27th as well as new Figure 2 that shows the 66 and 71 dBA noise contours requested by DOTD.

Please contact me if you have any questions regarding this submittal.

Introduction

As part of the proposed improvements to the US90 / LA 318 interchange in Jeanerette, LA in St. Mary Parish, a noise modeling assessment was conducted using the current FHWA approved traffic noise model (TNM 2.5) and LDOTD's *Highway Traffic Noise Policy* [July, 2011]. The results of this assessment were presented in "US 90 and LA 318 Interchange Improvements – Noise Technical Report (May 2012)".

As a supplemental to this previously undertaken assessment for build alternatives A through E, this memo outlines the results of a traffic noise assessment at sensitive receptors along the alternative technical concept (ATC) alignment. For impacted receptors, a noise mitigation assessment was conducted to evaluate the feasibility and reasonableness of noise barriers.

Evaluation Criteria

Warranted Criteria

Noise abatement consideration is warranted if a noise impact is identified. A noise impact occurs when the existing or predicted level "approaches or exceeds" the FHWA's Noise Abatement Criteria (NAC) (Table 2). The listed activity groups were established by the FHWA based on a variety of noise-sensitive land uses. Noise-sensitive land usage adjacent to the ATC design consists of mainly category B (residential) properties. LDOTD defines the approach criterion as 1 dB(A) less than the FHWA NAC. Therefore, there is a traffic noise impact if predicted exterior noise levels are 66 dB(A) or greater (for Categories B and C noise-sensitive land usage).

Feasibility Criteria

Feasibility deals primarily with acoustical and engineering considerations. According to LDOTD, effective abatement is considered feasible if the predicted insertion loss (i.e., reduction in noise level as a result of the proposed abatement) is at least 5 dB(A) for 75 percent or greater of the impacted sites. Additionally, a variety of engineering constraints must be considered when determining the feasibility of the proposed abatement. Engineering considerations include restrictions to vehicular or pedestrian traffic (including driveways); safety concerns (such as sight distances or recovery zones); barrier constructability and maintainability; utility and drainage impacts; and overall adverse social, economic, and environmental effects.

Reasonableness Criteria

Reasonableness determination focuses on a maximum cost per square foot per benefited receptor measurement to determine the relative value of the proposed abatement solution. LDOTD's noise barrier cost reasonableness value is based on a Max cost of $35,000 per benefited receptor, based on cost estimates published in 2011 by LDOTD. The square footage of a barrier is based on its length multiplied by its height above the finished ground at its base to the top elevation. The benefited receptor values are determined by counting all receptors receiving a 5 dB(A) or greater insertion loss (IL). Although at least a 5 dB(A) IL for the majority of receptors is required to meet the feasibility criteria, the proposed barrier must also reduce noise levels by at least 8 dB(A) for at least one first-row receptor in order to be considered reasonable.

Methodology

The modeling analysis was conducted using the most current roadway design files for the ATC design, received on July 31st. All other assessment methodology, including traffic volumes, speeds and roadway signal interchanges, are consistent with the previously undertaken assessment for Alternatives A through E.

Existing Conditions

The scope of this supplemental work effort is limited to the prediction modeling of the ATC (Alternative Technical Concept) alignment. Therefore, no extra noise monitoring was conducted for the purposes of this supplemental assessment.

Impact Assessment

Noise levels at sensitive receptors along the ATC alignment are expected to be between 52 dB(A) and 69 dB(A). These noise levels represent a traffic noise impact to a total of 28 receptors.

Mitigation

Three noise barriers were evaluated at a preliminary level, utilizing only basic optimization of panel heights. Barrier heights were evaluated in two-foot height increments, and were evaluated for feasibility and reasonableness with heights of 8, 10, 12, 14, 16, 18, and 20 feet above ground level to determine whether a barrier could be designed to meet the feasibility and reasonableness criteria. These barriers are located in areas with that were identified as having the potential to meet LDOTD's feasibility and reasonableness criteria, due to the number of impacted receptors that would be benefitted. Other singularly impacted receptors, or receptors located in areas where abatement was not practical (e.g. adjacent to local roads) were not considered in this supplemental assessment.

It is noted that traffic volumes along US 90 provide the most significant noise contribution to the identified impacted receptors. Accordingly, mitigation was focused on shielding impacted receptors from US 90, rather than adjacent local or access roads, which have considerably less traffic volumes.

The barriers evaluated for the ATC design are summarized in **Tables 1 and 2**, displayed graphically in **Figure 1**, and described below;

Barrier A - A noise barrier with a height of 14 feet and extending for approximately 2,600 feet would provide noise reductions of at least 5 dB(A) for nine of the ten impacted receptors identified in this NSA, therefore providing at least five decibels of noise reduction at 75 percent or more of the impacted receptor units. The noise barrier would provide at least 5 dB(A) of noise reduction at 5 non-impacted receptor units. The total cost would be approximately $1,154,437, giving a cost per benefitted receptor of $82,460, which is greater than the maximum $35,000 allowed for the reasonableness criteria.

This noise barrier satisfies the feasibility criteria but not the reasonableness criteria. Therefore, based on the results of the analysis completed for this project, this noise barrier is not recommended.

Table 1: Summary of Noise Barrier Evaluation for LA 318 / US 90 ATC

Barrier ID	Barrier_A	Barrier_B	Barrier_C	Totals
Height, Avg. (ft)	12.0	20.0	17.2	
Length (ft)	2,600	1,340	1,000	
Area (sq.ft)	31,201	26,813	17,199	75,213
Cost (@ $35/sq.ft)	$1,154,437	$2,225,479	$1,616,706	$4,996,622

Barrier B - A noise barrier with a height of 20 feet and extending for approximately 1,340 feet would provide noise reductions of at least 5 dB(A) for all five of the impacted receptors identified in this NSA, therefore providing at least five decibels of noise reduction at 75 percent or more of the impacted receptor units. The noise barrier would not provide at least 5 dB(A) of noise reduction at any non-impacted receptor units. The total cost would be approximately $2,225,479, giving a cost per benefitted receptor of $445,096, which is greater than the maximum $35,000 allowed for the reasonableness criteria.

This noise barrier satisfies the feasibility criteria but not the reasonableness criteria. Therefore, based on the results of the analysis completed for this project, this noise barrier is not recommended.

Barrier C - A noise barrier with a height of 17.2 feet and extending for approximately 1,000 feet would provide noise reductions of at least 5 dB(A) for all five of the impacted receptors identified in this NSA, therefore providing at least five decibels of noise reduction at 75 percent or more of the impacted receptor units. The noise barrier would not provide at least 5 dB(A) of noise reduction at any non-impacted receptor units. The total cost would be approximately $1,616,706, giving a cost per benefitted receptor of $323,341, which is greater than the maximum $35,000 allowed for the reasonableness criteria.

This noise barrier satisfies the feasibility criteria but not the reasonableness criteria. Therefore, based on the results of the analysis completed for this project, this noise barrier is not recommended.

Table 2: Summary of Noise Barrier Evaluation for LA 318 / US 90 ATC

Barrier ID	A	B	C
Warranted (i.e., exceed NAC?)	yes	yes	yes
Feasible (i.e., => -5 dB @ >=50% of impacts)	90%	100%	100%
Reasonable, Design Goal (i.e., 8 dB @ 1 x 1st Row)	yes	yes	yes
Reasonable (i.e., $35,000 per Ben.Rec)	$82,460	$445,096	$323,341
Recommend? (i.e., Warr+Feas+Reas)	no	no	no
LDOTD Criteria - Feasible	75%	75%	75%
Reasonable	$35,000	$35,000	$35,000
TNM Results			
# Rec	29	6	6
# Impacts	10	5	5
# Ben.Rec @ Impacts (> -5 dB)	9	5	5
# Ben.Rec Total (> -5 dB)	14	5	5
# Rec, Design Goal (> -8 dB)	2	2	1
# "1st-row" Rec	11	5	5

For future planning and illustrative purposes, the 66 and 71 dB(A) noise contours were developed and shown graphically in **Figure 2**. The noise contours reflect the unmitigated condition.

Construction

Increased noise levels from construction activities associated with the proposed roadway improvements may occur within the project study area. Noise levels during construction are difficult to predict and vary depending on the types of construction activity and the types of equipment used for each stage of work. Heavy machinery, the major source of noise in construction, is constantly moving in unpredictable patterns and is not usually at one location very long. LDOTD is committed to reasonable abatement of construction noise, recognizing that these impacts will be temporary in nature.

Source: AECOM, August 2015

Figure 1: Assessed Barrier Locations along ATC (Alternative Technical Concept)

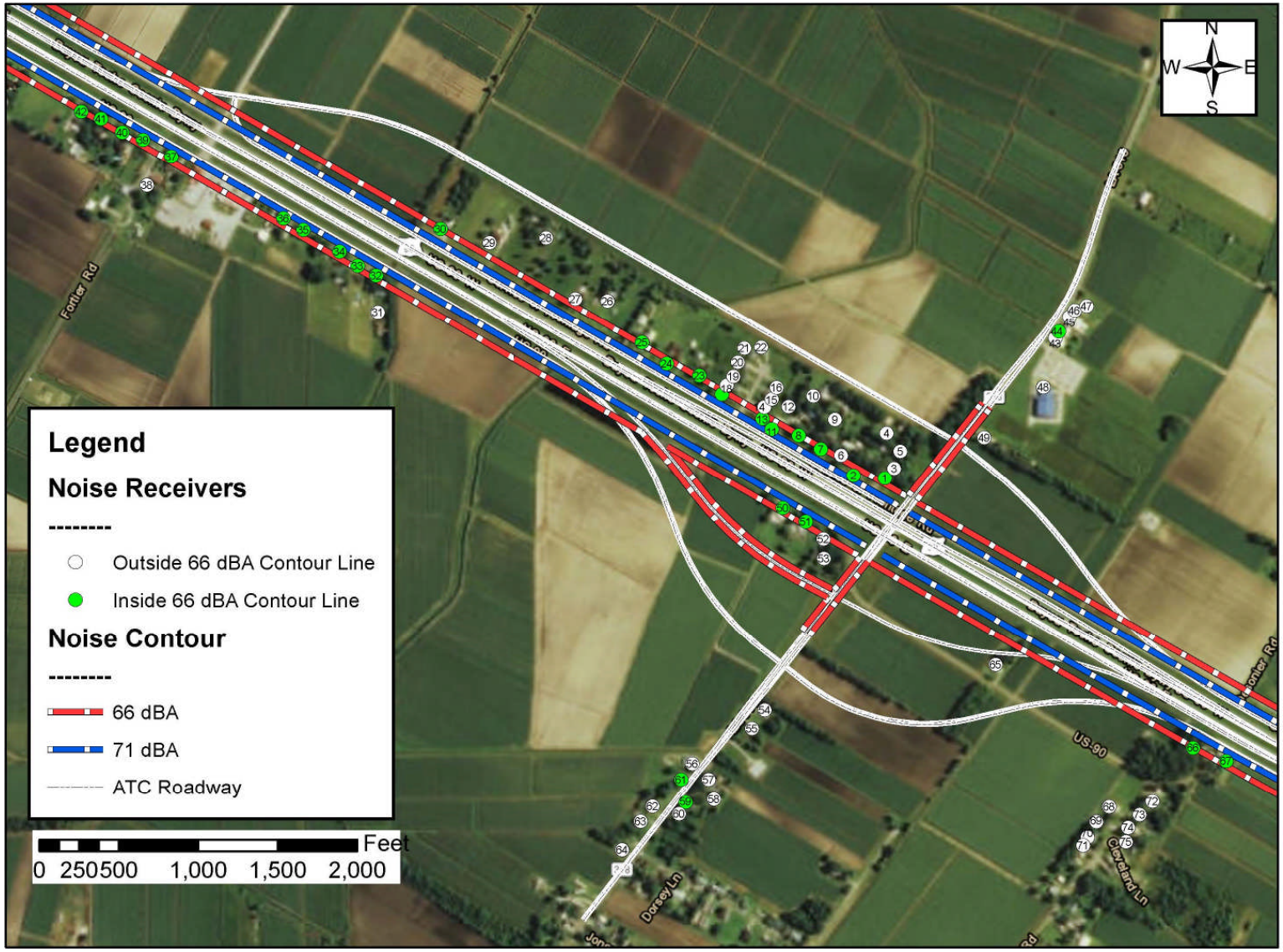

Source: AECOM, September 2015

Figure 2: Alternative Technical Concept (ATC) 2035 Noise Contours

APPENDIX E

LOUISIANA DEPARTMENT OF TRANSPORTATION & DEVELOPMENT

Environmental Section
PO Box 94245 | Baton Rouge, LA 70804-9245
ph: 225-242-4502 | fx: 225-242-4500

Bobby Jindal, Governor
Sherri H. LeBas, P.E., Secretary

July 29, 2015

STATE PROJECT NO.: H.004932
FEDERAL AID PROJECT NO.: H004932
NAME: INTERCHANGE US 90 @ LA 318
ROUTE: US 90
PARISH: ST. MARY

SUBJECT: SOLICITATION OF VIEWS, SUPPLEMENTAL ENVIRONMENTAL ASSESSMENT

In the planning stages of a transportation facility, views from federal, state, and local agencies, organizations, and individuals are solicited. The special expertise of these groups can assist the Louisiana Department of Transportation (DOTD) in conjunction with the Federal Highway Administration (FHWA) with the early identification of possible adverse economic, social, or environmental efforts or concerns. Your assistance in this regard will be appreciated.

We have attached a map showing the general location of the proposed project, along with a preliminary project description.

Views were previously solicited for this project as part of the 2007 *Stage 0 Feasibility Study*. Since the original solicitation, DOTD and FHWA have selected and approved Alternative E from the 2013 *Interchange for US 90 and LA 318 Environmental Assessment and Finding of No Significant Impact*. DOTD recently accepted a proposal for an Alternative Technical Concept (ATC) that would reduce the cost and impacts associated with the proposed interchange. We request that you review the attached information regarding the ATC and furnish us with your views and comments by **August 29, 2015**. Replies should be addressed to DOTD; Environmental Engineer Administrator; P.O. Box 94245; Baton Rouge, Louisiana 70804-9245. Please reference the State Project Number in your reply.

If you have any questions or require additional information, please contact Maria Bernard Reid at (225) 242-4506.

Sincerely,

N Ardoin

Noel Ardoin
Environmental Engineer Administrator

enclosure

NA/mbr

cc: Project Manager
District Administrator
District Traffic Operations Engineer

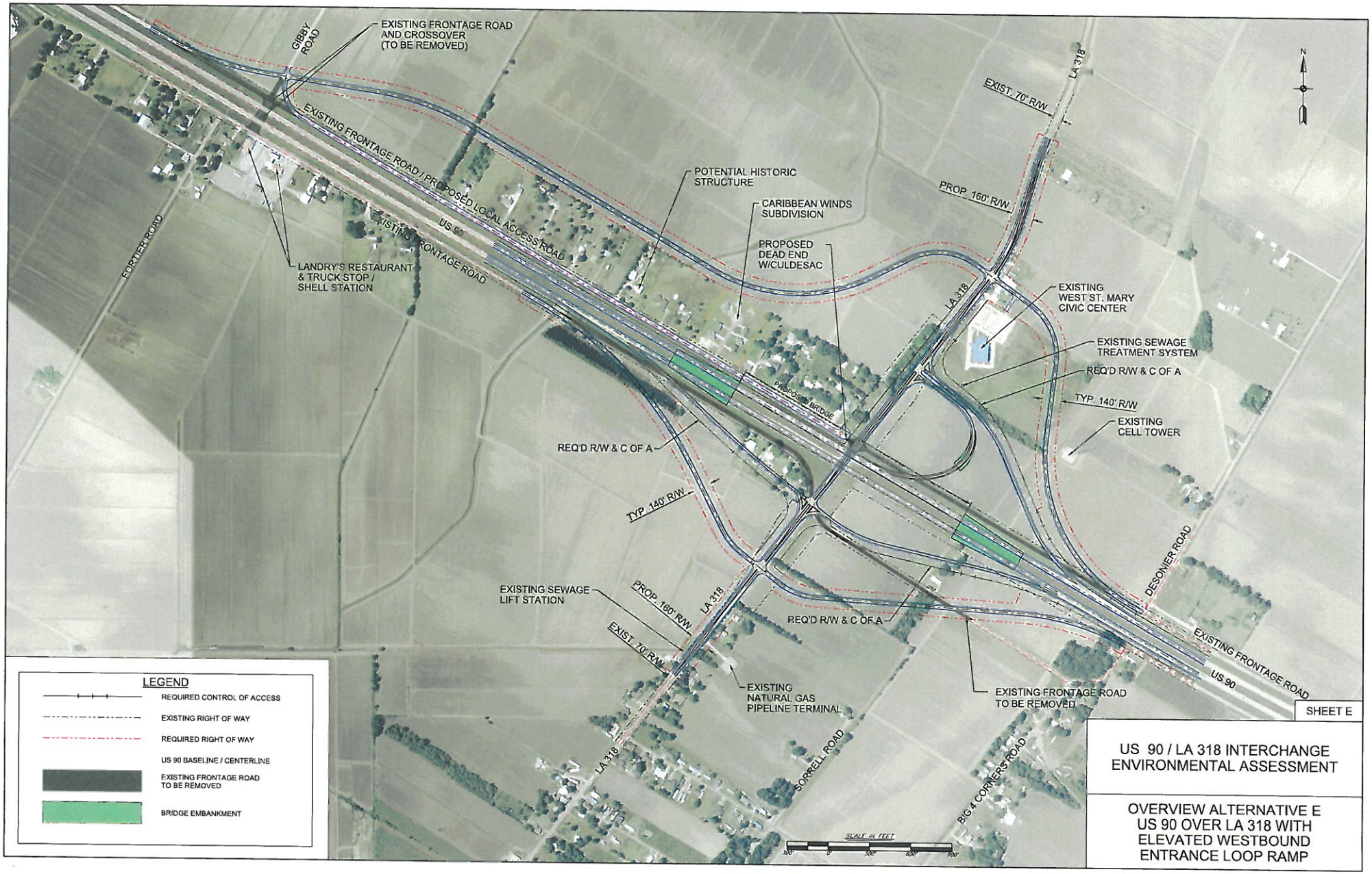

SHEET E

US 90 / LA 318 INTERCHANGE
ENVIRONMENTAL ASSESSMENT

OVERVIEW ALTERNATIVE E
US 90 OVER LA 318 WITH
ELEVATED WESTBOUND
ENTRANCE LOOP RAMP

1

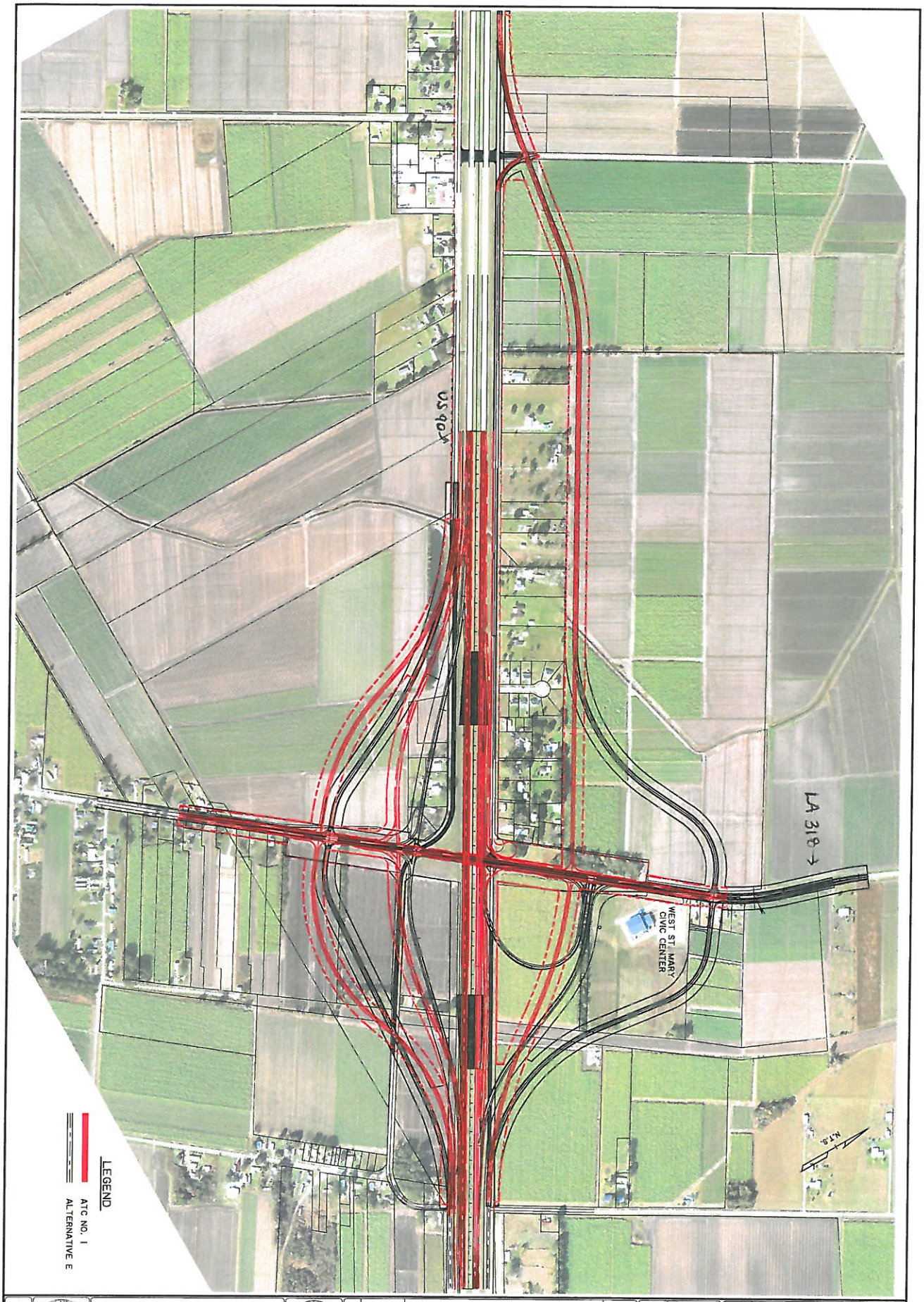

ALTERNATIVE TECHNICAL CONCEPT

US 90 (FUTURE I-49) LA 318 INTERCHANGE

NO.	DATE	REVISION OR CHANGE ORDER DESCRIPTION	BY

DESIGNED / CHECKED	JC / CMH	PARISH	ST. MARY
DETAILED / CHECKED	TW / CMH	CONTROL SECTION	424-05 & 239-31
SERIES NUMBER		STATE PROJECT	H.004932

SHEET NUMBER

8TH COAST GUARD DISTRICT (NO)
DISTRICT COMMANDER
HALE BOGGS FEDERAL BUILDING
500 POYDRAS ST
New Orleans LA 70130

ACADIANA PLANNING COMMISSION
DIRECTOR
PO BOX 568
CARENCRO LA 70520

CAJUN COAST VISITORS & CONVENTION BUREAU
EXECUTIVE DIRECTOR
P O BOX 2332
MORGAN CITY LA 70381

CHAMBER OF COMMERCE
ST MARY - FRANKLIN
600 MAIN ST
FRANKLIN LA 70538

CHAMBER OF COMMERCE
ST MARY PARISH
727 MYRTLE ST
MORGAN CITY LA 70380

CHITIMACHA TRIBE OF LOUISIANA
KIMBERLY WALDEN, CULTURAL DIRECTOR
P.O. BOX 661
CHARENTON LA 70523

CHOCTAW NATION OF OKLAHOMA
SEND SOVS TO CHANDRA BONDZIE OF FHWA
EMAIL: CHANDRA.BONDZIE@DOT.GOV
DURANT OK 74702

DEPARTMENT OF THE ARMY
NEW ORLEANS DISTRICT
COMPLETED WORKS
ATTN: KAREN CLEMENT
P O BOX 60267
NEW ORLEANS LA 70160-0267

HON. JOE HARRISON
LA HOUSE OF REPRESENTATIVES
(DISTRICT 51)
P O DRAWER 1809
GRAY LA 70359

HON. R.L. "BRET" ALLAIN
LOUISIANA STATE SENATE
(DISTRICT 21)
600 MAIN ST
FRANKLIN LA 70538

HON. SAM JONES
LA HOUSE OF REPRESENTATIVES
(DISTRICT 50)
733 MAIN ST
FRANKLIN LA 70538

LOUISIANA STATE POLICE
TROOP C
4047 WEST PARK
GRAY LA 70359

LOUISIANA STATE POLICE
TROOP I
121 EAST PONT DES MOUTON
LAFAYETTE LA 70507

MORGAN CITY HARBOR & TERMINAL
DIST-PORT OF MORGAN CITY
P O BOX 1460
MORGAN CITY LA 70381

NATIONAL MARINE FISH SERVICE
HABITAT CONSERVATION DIV
LSU CENTER FOR WETLAND RES
C/O LSU
MILITARY SCIENCE BUILDING, ROOM 266
SOUTH STADIUM DRIVE
BATON ROUGE LA 70803-7535

NICHOLLS STATE UNIVERSITY, SLEC
MS ANNE M PERRY
PROGRAMS MANAGER
P O BOX 2048-NSU
THIBODAUX LA 70310

PATTERSON PLANNING COMM
CHAIRMAN
P O BOX
PATTERSON LA 70392

PORT OF WEST ST MARY
P O DRAWER 601
FRANKLIN LA 70538

ST MARY SOIL & WATER
CONSERVATION DIST
500 MAIN ST
COURTHOUSE ROOM 310
FRANKLIN LA 70538

ST. MARY PARISH
CIVIL DEFENSE
P O BOX 247
PATTERSON LA 70392-0247

ST. MARY PARISH
FLOODPLAIN ADMINISTRATOR
C/O PARISH COUNCIL
300 MAIN ST
COURTHOUSE 5TH FLOOR
PATTERSON LA 70538

ST. MARY PARISH
POLICE JURY
500 MAIN ST
COURTHOUSE 5TH FLOOR
FRANKLIN LA 70538

ST. MARY PARISH
SCHOOL BOARD
P O BOX 170
CENTERVILLE LA 70522

ST. MARY PARISH
SHERIFF
P O BOX 571
FRANKLIN LA 70538

U.S. HOUSE OF REPRESENTATIVES
HON. CHARLES W. BOUSTANY, JR. MD
(DISTRICT 3)
800 LAFAYETTE ST.
SUITE 1400
LAFAYETTE LA 70501

COALITION TO RESTORE COASTAL LOUISIANA
KIMBERLY REYHER, EXECUTIVE DIRECTOR
6160 PERKINS RD STE 225
BATON ROUGE LA 70808

COUSHATTA TRIBE OF LOUISIANA
DR. LINDA LANGLEY, THPO
P O BOX 818
ELTON LA 70532

DEPARTMENT OF AGRICULTURE AND FORESTRY
OFFICE OF FORESTRY
P O BOX 1628
Baton Rouge LA 70821

DEPARTMENT OF AGRICULTURE AND FORESTRY
OFFICE OF SOIL/WATER CONSERVATION
P O BOX 3554
Baton Rouge LA 70821

DEPARTMENT OF CULTURE RECREATION & TOURISM
DIVISION OF ARCHAEOLOGY
P O BOX 44247
Baton Rouge LA 70804

DEPARTMENT OF CULTURE RECREATION & TOURISM
OFFICE OF STATE PARKS
P O BOX 44426
Baton Rouge LA 70804

DEPARTMENT OF ECONOMIC DEVELOPMENT
OFFICE OF BUSINESS DEVELOPMENT
P O BOX 94185
Baton Rouge LA 70804

DEPARTMENT OF HEALTH AND HOSPITALS
DIVISION OF ENVIRONMENTAL HEALTH
ATTN: YUANDA ZHU
P O BOX 4489
Baton Rouge LA 70821

DEPARTMENT OF HEALTH AND HOSPITALS
TENNEY SIBLEY, CHIEF SANITARIAN
P O BOX 629
Baton Rouge LA 70821-0629

DEPARTMENT OF PUBLIC SAFETY
HIGHWAY SAFETY COMMISSION
P O BOX 66336
Baton Rouge LA 70896

DEPT OF ENVIRONMENTAL QUALITY
EMAIL LETTERS SOV'S TO LINDA.HARDY@LA.GOV
EMAIL: DEQ AT LINDA.HARDY@LA.GOV
Baton Rouge LA 70802

DEPT OF WILDLIFE & FISHERIES
LOUISIANA NATURAL HERITAGE PROGRAM
P O BOX 98000
BATON ROUGE LA 70898

DIVISION OF ADMINISTRATION
FACILITY PLANNING & CONTROL
P O BOX 94095
BATON ROUGE LA 70804

DIVISION OF ADMINISTRATION
STATE LAND OFFICE
P O BOX 44124
BATON ROUGE LA 70804

ENVIRONMENTAL PROTECTION AGENCY
SOURCE WATER PROTECTION (6WQ-S)
1445 ROSS AVE
DALLAS TX 75202-2733

FEDERAL TRANSIT ADMINISTRATION REGION 6
819 TAYLOR ST RM. 8A36
FORT WORTH TX 76102

FEMA REGION VI
FRC 800 NORTH LOOP 288
DENTON TX 76209

FLOODPLAIN MANAGEMENT PROGRAM
DOTD SECTION 64
INTRADEPARTMENTAL MAIL
DOTD LA 70802

INTER-TRIBAL COUNCIL OF LOUISIANA, INC
DIRECTOR
991 GRAND CAILLOU RD
HOUMA LA 70363-5705

JENA BAND OF CHOCTAW INDIANS
ALINA SHIVELY, DEPUTY THPO
EMAIL: ASHIVELY@JENACHOCTAW.ORG
JENA LA 71342

LOUISIANA DEPARTMENT OF NATURAL RESOURCES
OFFICE OF CONSERVATION
P O BOX 94275
BATON ROUGE LA 70804-9275

LOUISIANA DEPARTMENT OF NATURAL RESOURCES
OFFICE OF MINERAL RESOURCES
P O BOX 2827
BATON ROUGE LA 70821

LOUISIANA FORESTRY ASSOCIATION
ATTN: MR. BUCK VANDERSTEEN
P O BOX 5067
ALEXANDRIA LA 71307

LOUISIANA GOOD ROADS ASSOCIATION
P O BOX 3713
BATON ROUGE LA 70821

LOUISIANA STATE UNIVERSITY
SEA GRANT LEGAL ADVISORY SERVICE
JAMES G WILKINS
227B SEA GRANT BUILDING
Baton Rouge LA 70803

MISSISSIPPI BAND OF CHOCTAW INDIANS
E-MAIL LETTERS TO KCARLETON@CHOCTAW.ORG
KCARLETON@CHOCTAW.ORG
Philadelphia MS 39350

NATIONAL PARK SERVICE
SOUTHEAST REGION
ATTN: ANITA JACKSON
100 ALABAMA ST, SW
1924 BUILDING
ATLANTA GA 30303

NATURAL RESOURCES CONSERVATION SERVICE
KEVIN D. NORTON
3737 GOVERNMENT ST
ALEXANDRIA LA 71302

SEMINOLE NATION OF OKLAHOMA
EMAIL LETTERS TO NATALIE HARJO AT HARJO.N@SNO-NSN.
HARJO.N@SNO-NSN.GOV
Wewoka OK 74884

TUNICA-BILOXI TRIBE OF LOUISIANA
EARL J. BARBRY, JR., THPO
P.O. BOX 1589
MARKSVILLE LA 71351

U.S. FISH & WILDLIFE SERVICE
ONLINE USFWS SOV
WWW.FWS.GOV/LAFAYETTE
Lafayette LA 70506

U.S. GEOLOGICAL SURVEY
3535 S SHERWOOD FOREST STE 120
BATON ROUGE LA 70806

U.S. HOUSE OF REPRESENTATIVES
HON. CEDRIC RICHMOND
(DISTRICT 2)
2021 LAKESHORE DR.
STE 309
NEW ORLEANS LA 70122

U.S. HOUSE OF REPRESENTATIVES
HON. CHARLES W. BOUSTANY, JR. MD
(DISTRICT 3)
800 LAFAYETTE ST.
SUITE 1400
LAFAYETTE LA 70501

U.S. HOUSE OF REPRESENTATIVES
HON. GARRET GRAVES
(DISTRICT 6)
2351 ENERGY DRIVE, STE 1200
BATON ROUGE LA 70808

U.S. HOUSE OF REPRESENTATIVES
HON. JOHN FLEMING
(DISTRICT 4)
6425 YOUREE DRIVE STE 350
SHREVEPORT LA 71105

U.S. HOUSE OF REPRESENTATIVES
HON. RALPH ABRAHAM
(DISTRICT 5)
417 CANNON HOUSE OFFICE BUILDING
WASHINGTON DC 20515

U.S. HOUSE OF REPRESENTATIVES
HON. STEVE J. SCALISE
(DISTRICT 1)
110 VETERANS BLVD., STE. 500
METAIRIE LA 70005

UNITED STATES SENATE
SENATOR BILL CASSIDY M.D.
5555 HILTON AVENUE
SUITE 100
BATON ROUGE LA 70808

UNITED STATES SENATE
SENATOR DAVID VITTER
2800 VETERANS MEMORIAL BLVD STE 201
METAIRIE LA 70002

LOUISIANA DEPARTMENT OF AGRICULTURE & FORESTRY
MIKE STRAIN DVM
COMMISSIONER

August 7, 2015

Agricultural & Environmental Sciences
P.O. Box 3596
Baton Rouge,
LA 70821
(225) 925-3770
Fax: 925-3760

Agro-Consumer Services
P.O. Box 3098
Baton Rouge,
LA 70821
(225) 922-1341
Fax: 923-4877

Animal Health & Food Safety
P.O. Box 1951
Baton Rouge,
LA 70821
(225) 925-3962
Fax: 925-4103

Forestry
P.O. Box 1628
Baton Rouge,
LA 70821
(225) 925-4500
Fax: 922-1356

Management & Finance
P.O. Box 3481
Baton Rouge,
LA 70821
(225) 922-1255
Fax: 925-6012

Soil & Water Conservation
P.O. Box 3554
Baton Rouge,
LA 70821
(225) 922-1269
Fax: 922-2577

DOTD
Environmental Engineer Administrator
P.O. Box 94245
Baton Rouge, Louisiana 70804-9245

RE: Solicitation of Views

STATE PROJECT NOS.: H.004932
FEDERAL AID PROJECT NO.: H004932
NAME: INTERCHANGE US 90 @ LA 318
PARISH: ST. MARY

Dear Ms. Ardoin,

I have no comment at this time regarding the above referenced project.

Sincerely,

Brad Spicer KH

Bradley E. Spicer
Assistant Commissioner

BES:kh

USDA

United States Department of Agriculture

August 10, 2015

Mr. Noel Ardoin
Environmental Engineer Administrator
Louisiana Department of Transportation and Development
P.O. Box 94245
Baton Rouge, Louisiana 70804-9245

RE: US 90 at LA 318 Interchange; State Project No. H.004932; Alternative Technical Concept (ATC)

Dear Mr. Ardoin:

I have reviewed the above referenced project for potential requirements of the Farmland Protection Policy Act (FPPA) and potential impact to Natural Resources Conservation Service projects in the immediate vicinity.

Projects are subject to FPPA requirements if they may irreversibly convert farmland (directly or indirectly) to nonagricultural use and are completed by a federal agency or with assistance from a federal agency. For the purpose of FPPA, farmland includes prime farmland, unique farmland, and land of statewide or local importance. Farmland subject to FPPA requirements can be forest land, pastureland, cropland, or other land, but not water or urban built-up land.

The project map and narrative submitted with your request indicates that the proposed construction areas will potentially impact the following prime or unique farmland soils:

Soil Mapunit Symbol and Name	Acres	RV
BdA – Baldwin silty clay loam, 0 to 1 percent slopes	6.1	94
CoA – Coteau silt, o to 1 percent slopes	18.6	88
GaA – Galvez silt loam, 0 to 1 percent slopes	2.1	94
IbA – Iberia clay, 0 to 1 percent slopes	28.0	76
PaA – Patoutville silt, o to 1 percent slopes	4.0	88
	58.8 acres	83 Avg. RV

Please find attached a CPA-106 Farmland Conversion Impact Rating for Corridor Type Projects Form with our agencies information completed. Furthermore, we do not predict impacts to NRCS work in the vicinity.

For specific information about the soils found in the project area, please visit our Web Soil Survey at the following location: http://websoilsurvey.nrcs.usda.gov/

For more information on FPPA requirements or the process to receive a Farmland Conversion Impact Rating (Form AD-1006 or CPA-106) please visit the following location:
http://www.nrcs.usda.gov/wps/portal/nrcs/main/national/landuse/fppa/

Please direct all future correspondence to me at the address shown below.

Respectfully,

(ACTING FOR)
Kevin D. Norton
State Conservationist

Enclosure

Natural Resources Conservation Service
State Office
3737 Government Street
Alexandria, Louisiana 71302
Voice: (318) 473-7751 Fax: 1-844-325-6947
An Equal Opportunity Provider and Employer

U.S. DEPARTMENT OF AGRICULTURE
Natural Resources Conservation Service

NRCS-CPA-106
(Rev. 1-91)

FARMLAND CONVERSION IMPACT RATING FOR CORRIDOR TYPE PROJECTS

PART I *(To be completed by Federal Agency)*	3. Date of Land Evaluation Request 7/29/15	4. Sheet 1 of _____
1. Name of Project **US 90 at LA 318 Interchange (ATC)**	5. Federal Agency Involved **FHWA**	
2. Type of Project **Road Construction**	6. County and State **St. Mary Parish, Louisiana**	

PART II *(To be completed by NRCS)*	1. Date Request Received by NRCS 8/5/15	2. Person Completing Form M. Mouton
3. Does the corridor contain prime, unique statewide or local important farmland? (If no, the FPPA does not apply - Do not complete additional parts of this form) YES ☑ NO ☐		4. Acres Irrigated 0 / Average Farm Size 807
5. Major Crop(s) Sugarcane and Soybean	6. Farmable Land in Government Jurisdiction Acres: 127,963 32 %	7. Amount of Farmland As Defined in FPPA Acres: 118,654 29 %
8. Name Of Land Evaluation System Used St. Mary LESA	9. Name of Local Site Assessment System N/A	10. Date Land Evaluation Returned by NRCS 8/10/15

PART III *(To be completed by Federal Agency)*	Alternative Corridor For Segment _____			
	Corridor A	Corridor B	Corridor C	Corridor D
A. Total Acres To Be Converted Directly	60.2			
B. Total Acres To Be Converted Indirectly, Or To Receive Services				
C. Total Acres In Corridor	60.2			
PART IV *(To be completed by NRCS) Land Evaluation Information*				
A. Total Acres Prime And Unique Farmland	58.8			
B. Total Acres Statewide And Local Important Farmland				
C. Percentage Of Farmland in County Or Local Govt. Unit To Be Converted	.0004			
D. Percentage Of Farmland in Govt. Jurisdiction With Same Or Higher Relative Value	28.4			
PART V *(To be completed by NRCS) Land Evaluation Information Criterion Relative value of Farmland to Be Serviced or Converted (Scale of 0 - 100 Points)*	83			
PART VI *(To be completed by Federal Agency) Corridor Assessment Criteria (These criteria are explained in 7 CFR 658.5(c))* — Maximum Points				
1. Area in Nonurban Use — 15				
2. Perimeter in Nonurban Use — 10				
3. Percent Of Corridor Being Farmed — 20				
4. Protection Provided By State And Local Government — 20				
5. Size of Present Farm Unit Compared To Average — 10				
6. Creation Of Nonfarmable Farmland — 25				
7. Availablility Of Farm Support Services — 5				
8. On-Farm Investments — 20				
9. Effects Of Conversion On Farm Support Services — 25				
10. Compatibility With Existing Agricultural Use — 10				
TOTAL CORRIDOR ASSESSMENT POINTS — 160	0	0	0	0
PART VII *(To be completed by Federal Agency)*				
Relative Value Of Farmland (From Part V) — 100	83	0	0	0
Total Corridor Assessment (From Part VI above or a local site assessment) — 160	0	0	0	0
TOTAL POINTS *(Total of above 2 lines)* — 260	83	0	0	0

1. Corridor Selected:	2. Total Acres of Farmlands to be Converted by Project:	3. Date Of Selection:	4. Was A Local Site Assessment Used? YES ☐ NO ☐

5. Reason For Selection:

Signature of Person Completing this Part: | DATE

NOTE: Complete a form for each segment with more than one Alternate Corridor

CORRIDOR - TYPE SITE ASSESSMENT CRITERIA

The following criteria are to be used for projects that have a linear or corridor - type site configuration connecting two distant points, and crossing several different tracts of land. These include utility lines, highways, railroads, stream improvements, and flood control systems. Federal agencies are to assess the suitability of each corridor - type site or design alternative for protection as farmland along with the land evaluation information.

(1) How much land is in nonurban use within a radius of 1.0 mile from where the project is intended?
More than 90 percent - 15 points
90 to 20 percent - 14 to 1 point(s)
Less than 20 percent - 0 points

(2) How much of the perimeter of the site borders on land in nonurban use?
More than 90 percent - 10 points
90 to 20 percent - 9 to 1 point(s)
Less than 20 percent - 0 points

(3) How much of the site has been farmed (managed for a scheduled harvest or timber activity) more than five of the last 10 years?
More than 90 percent - 20 points
90 to 20 percent - 19 to 1 point(s)
Less than 20 percent - 0 points

(4) Is the site subject to state or unit of local government policies or programs to protect farmland or covered by private programs to protect farmland?
Site is protected - 20 points
Site is not protected - 0 points

(5) Is the farm unit(s) containing the site (before the project) as large as the average - size farming unit in the County ? (Average farm sizes in each county are available from the NRCS field offices in each state. Data are from the latest available Census of Agriculture, Acreage or Farm Units in Operation with $1,000 or more in sales.)
As large or larger - 10 points
Below average - deduct 1 point for each 5 percent below the average, down to 0 points if 50 percent or more below average - 9 to 0 points

(6) If the site is chosen for the project, how much of the remaining land on the farm will become non-farmable because of interference with land patterns?
Acreage equal to more than 25 percent of acres directly converted by the project - 25 points
Acreage equal to between 25 and 5 percent of the acres directly converted by the project - 1 to 24 point(s)
Acreage equal to less than 5 percent of the acres directly converted by the project - 0 points

(7) Does the site have available adequate supply of farm support services and markets, i.e., farm suppliers, equipment dealers, processing and storage facilities and farmer's markets?
All required services are available - 5 points
Some required services are available - 4 to 1 point(s)
No required services are available - 0 points

(8) Does the site have substantial and well-maintained on-farm investments such as barns, other storage building, fruit trees and vines, field terraces, drainage, irrigation, waterways, or other soil and water conservation measures?
High amount of on-farm investment - 20 points
Moderate amount of on-farm investment - 19 to 1 point(s)
No on-farm investment - 0 points

(9) Would the project at this site, by converting farmland to nonagricultural use, reduce the demand for farm support services so as to jeopardize the continued existence of these support services and thus, the viability of the farms remaining in the area?
Substantial reduction in demand for support services if the site is converted - 25 points
Some reduction in demand for support services if the site is converted - 1 to 24 point(s)
No significant reduction in demand for support services if the site is converted - 0 points

(10) Is the kind and intensity of the proposed use of the site sufficiently incompatible with agriculture that it is likely to contribute to the eventual conversion of surrounding farmland to nonagricultural use?
Proposed project is incompatible to existing agricultural use of surrounding farmland - 10 points
Proposed project is tolerable to existing agricultural use of surrounding farmland - 9 to 1 point(s)
Proposed project is fully compatible with existing agricultural use of surrounding farmland - 0 points

BOBBY JINDAL
GOVERNOR

State of Louisiana
DEPARTMENT OF WILDLIFE AND FISHERIES
OFFICE OF WILDLIFE

ROBERT J. BARHAM
SECRETARY
JIMMY L. ANTHONY
ASSISTANT SECRETARY

Date	August 14, 2015
Name	Noel Ardoin
Company	LA DOTD
Street Address	P.O. Box 94245
City, State, Zip	Baton Rouge, LA 70804
Project	State Project No.: H.004932 Interchange US 90 @ LA 318
Project ID	1782015
Invoice Number	15081410

Personnel of the Coastal & Nongame Resources Division have reviewed the preliminary data for the captioned project. After careful review of our database, no impacts to rare, threatened, or endangered species or critical habitats within Louisiana's boundary are anticipated for the proposed project. No state or federal parks, wildlife refuges, scenic streams, or wildlife management areas are known at the specified site within Louisiana's boundaries.

The Louisiana Natural Heritage Program (LNHP) has compiled data on rare, endangered, or otherwise significant plant and animal species, plant communities, and other natural features throughout the state of Louisiana. Heritage reports summarize the existing information known at the time of the request regarding the location in question. The quantity and quality of data collected by the LNHP are dependent on the research and observations of many individuals. In most cases, this information is not the result of comprehensive or site-specific field surveys; many natural areas in Louisiana have not been surveyed. This report does not address the occurrence of wetlands at the site in question. Heritage reports should not be considered final statements on the biological elements or areas being considered, nor should they be substituted for on-site surveys required for environmental assessments. LNHP requires that this office be acknowledged in all reports as the source of all data provided here. If at any time Heritage tracked species are encountered within the project area, please contact the LNHP Data Manager at 225-765-2643. If you have any questions, or need additional information, please call 225-765-2357.

Sincerely,

for Amity Bass, Coordinator
Natural Heritage Program

BOBBY JINDAL
GOVERNOR

State of Louisiana
DEPARTMENT OF NATURAL RESOURCES
OFFICE OF CONSERVATION

STEPHEN CHUSTZ
SECRETARY

JAMES H. WELSH
COMMISSIONER OF CONSERVATION

August 17, 2015

TO: Ms. Noel Ardoin
Environmental Engineer Administrator
DOTD
P. O. Box 94245
Baton Rouge, Louisiana 70804-9245

RE: Solicitation of Views
State Project No. H.004932
Route: US 90
St. Mary Parish

Dear Ms. Ardoin:

In response to your letter dated July 29, 2015, concerning the referenced matter, please be advised that the Office of Conservation collects and maintains many types of information regarding oil and gas exploration, production, distribution, and other data relative to the petroleum industry as well as related and non-related injection well information, surface mining and ground water information and other natural resource related data. Most information concerning oil, gas and injection wells for any given area of the state, including the subject area of your letter can be obtained through records search via the SONRIS data access application available at:

http://www.dnr.louisiana.gov

A review of our computer records for the referenced project area indicates that there are no active oil, gas or injection wells located in the project area, although it appears that a plugged and abandoned well is located in the near vicinity. The DNR water well database indicates that there are registered water wells in the vicinity of the project area. Additionally, unregistered water wells may be located in the area.

The Office of Conservation maintains records of all activities within its jurisdiction in paper, microfilm or electronic format. These records may be accessed during normal business hours, Monday through Friday, except on State holidays or emergencies that require the Office to be closed. Please call 225-342-5540 for specific contact information or for directions to the Office of Conservation, located in the LaSalle Building, 617 North Third Street, Baton Rouge, Louisiana. For pipelines and other underground hazards, please contact Louisiana One Call at 1-800-272-3020 prior to commencing operations. Should you need to direct your inquiry to any of our Divisions, you may use the following contact information:

Division	Contact	Phone No.	E-mail Address
Engineering	Jeff Wells	225-342-5638	jeff.wells@la.gov
Pipeline	Steven Giambrone	225-342-2989	steven.giambrone@la.gov
Injection & Mining	Brad Bourgoyne	225-342-4286	brad.bourgoyne@la.gov
Geological	Mike Kline	225-342-3335	mike.kline@la.gov
Environmental	Gary Snellgrove	225-342-7222	gary.snellgrove@la.gov

If you have difficulty in accessing the data via the referenced website because of computer related issues, you may obtain assistance from our technical support section by selecting Help on the SONRIS tool bar and submitting an email describing your problems and including a telephone number where you may be reached.

Sincerely,

James H. Welsh
Commissioner of Conservation

JHW:MSK:msk

UNITED STATES ENVIRONMENTAL PROTECTION AGENCY
REGION 6
1445 ROSS AVENUE, SUITE 1200
DALLAS TX 75202-2733

August 19, 2015

Ms. Noel A. Ardoin
Environmental Engineer Administrator
LADOTD
Section 28
P.O. Box 94245
Baton Rouge, LA 70804-9245

Dear Ms. Ardoin:

We have received your July 29, 2015, letter requesting our evaluation of the potential environmental impacts which might result from the following project:

LA 318 Interchange At US 90
Interchange US 90 at LA 318
St. Mary Parish
Near the Town of Sorrel, Louisiana

The project, proposed for financial assistance through the Louisiana Department of Transportation and Development funds & the Federal Highway Administration, is located on the Chicot aquifer system which has been designated a sole source aquifer (SSA) by the EPA. Based on the information provided for the project, we have determined that the project, as proposed, should not have an adverse effect on the quality of the ground water underlying the project site.

This approval of the proposed project does not relieve the applicant from adhering to other State and Federal requirements, which may apply. This approval is based solely upon the potential impact to the quality of ground water as it relates to the EPA's authority pursuant to Section 1424(e) of the Safe Drinking Water Act.

If you did not include the parish, project description, project location or the federal funding agency, please do so in future SSA correspondence.

If you have any questions on this letter or the SSA program please contact me at (214) 665-8485.

Sincerely yours,

Omar T. Martinez, Coordinator
Sole Source Aquifer Program
Ground Water/UIC Section

cc: Jesse Means, LDEQ

To: Maria Reid
Subject: RE: Solicitation of Views H.004932 (St. Mary Parish) via Choctaw Nation of Oklahoma

From: Lindsey Bilyeu [mailto:lbilyeu@choctawnation.com]
Sent: Monday, August 31, 2015 7:22 PM
To: Bondzie, Chandra (FHWA)
Subject: RE: Solicitation of Views H.004932 (St. Mary Parish) via Choctaw Nation of Oklahoma

Dear Chandra,

The Choctaw Nation of Oklahoma thanks the FHWA, Louisiana Division, for the correspondence regarding the above referenced project. St. Mary Parish, LA lies outside of the Choctaw Nation's area of historic interest. The Choctaw Nation Historic Preservation Department respectfully defers to the other Tribes that have been contacted.

If you have any questions, please contact me.

Thank you,

Lindsey D. Bilyeu
NHPA Senior Section 106 Reviwer
Historic Preservation Department
Choctaw Nation of Oklahoma
P.O. Box 1210
Durant, OK 74701
580-924-8280 ext. 2631
lbilyeu@choctawnation.com

From: chandra.bondzie@dot.gov [mailto:chandra.bondzie@dot.gov]
Sent: Friday, July 31, 2015 3:05 PM
To: Lindsey Bilyeu <lbilyeu@choctawnation.com>
Cc: Noel.Ardoin@LA.GOV; Brandon.Buckner@dot.gov
Subject: FW: Solicitation of Views H.004932 (St. Mary Parish) via Choctaw Nation of Oklahoma

Hi Lindsey,

Please, see the attached information regarding project H.004932. If you need any information regarding the project, contact me at any time. Thank you and have a great weekend.

Regards,

Chandra Bondzie | Community Planner | FHWA LA Division | 5304 Flanders Dr, Suite A Baton Rouge, LA 70808 | 225-757-7623

From: Jeannette Williams [mailto:Jeannette.Williams@la.gov]
Sent: Wednesday, July 29, 2015 10:40 AM
To: Bondzie, Chandra (FHWA)
Cc: Noel Ardoin
Subject: Solicitation of Views H.004932 (St. Mary Parish) via Choctaw Nation of Oklahoma

LOUISIANA DEPARTMENT OF TRANSPORTATION & DEVELOPMENT

Office of the Secretary
PO Box 94245 | Baton Rouge, LA 70804-9245
ph: 225-379-3005 | fx: 225-379-3002

Bobby Jindal, Governor
Sherri H. LeBas, P.E., Secretary

August 31, 2015

STATE PROJECT NO: H.004932
FEDERAL AID PROJECT NO: H004932
NAME: INTERCHANGE US 90 AT LA 318
ROUTE: LA 90
PARISHES: ST. MARY

Noel Ardoin
Louisiana Department of Transportation and Development
P.O. Box 94245
Baton Rouge, LA 70804

Subject: Solicitation of Views

Dear Noel:

Enclosed is a copy of St. Mary Parish's Flood Insurance Rate Maps (FIRM) indicating the proposed project.

During the improvements and construction, there must be allowance for the adequate flow of water and assurance that there will be no back up of water. There must be no instance of the creation of flooding where there was no flooding prior to construction. At this time, consideration must be given to the responsibility for cleaning debris and keeping the surrounding area clear so as not to interfere with its function.

In order to assure compliance with the St. Mary Parish's requirements for the National Flood Insurance Program (NFIP), and ensure that appropriate permits are obtained, please contact the floodplain administrators for the Parish. The contact person for St. Mary Parish is Tammy Luke, 500 Main St. Franklin, LA, 70538 and telephone number (337) 828-4100.

We thank you for the opportunity to comment on this project. If you need additional information, please contact our office, (225) 379-3005.

Sincerely,

Jennifer Deglandon Rachal, CFM
Floodplain Management Program Coordinator

Enclosure
pc: Tammy Luke

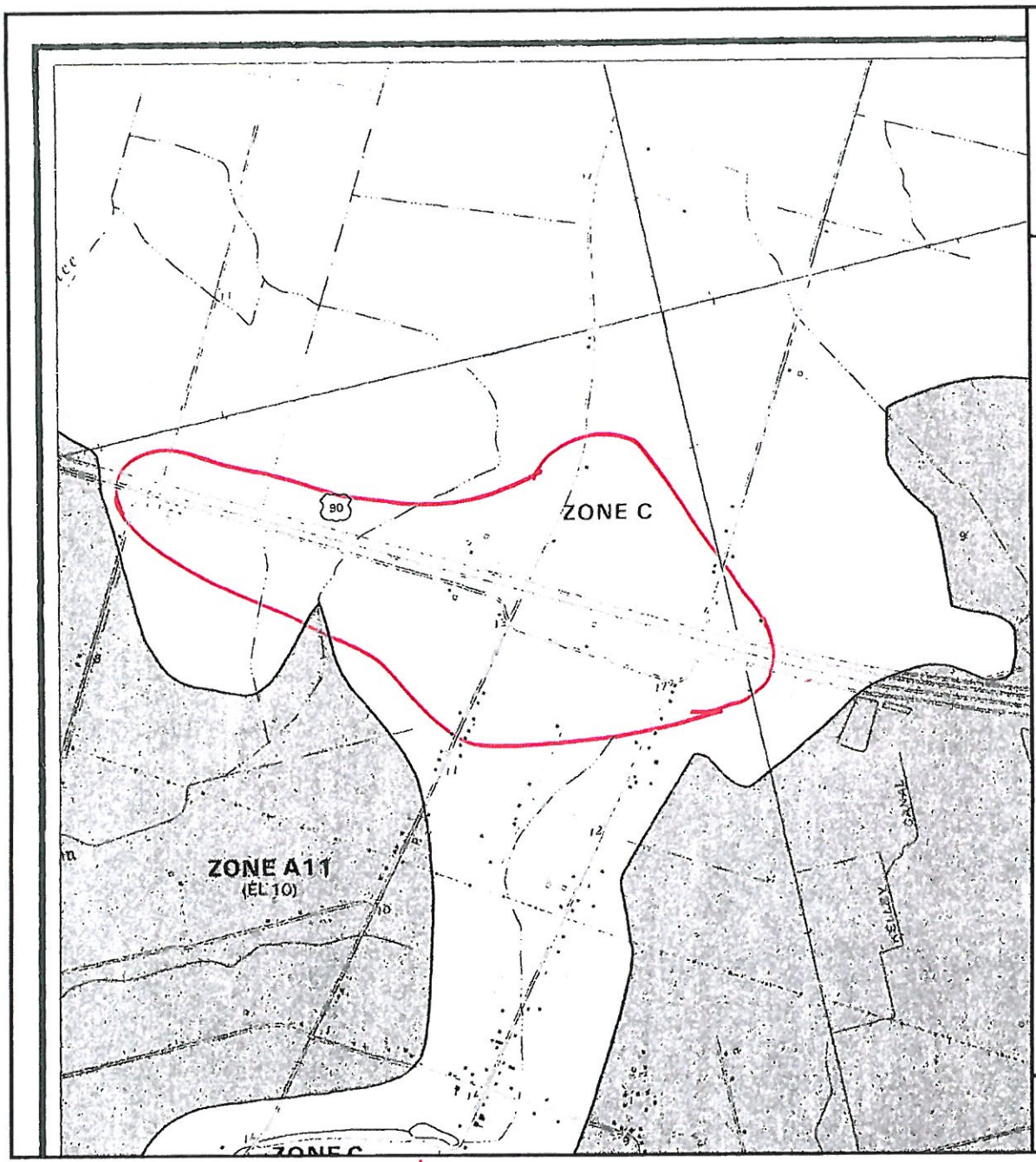

APPROXIMATE SCALE

2000 0 2000 FEET

NATIONAL FLOOD INSURANCE PROGRAM

FIRM

FLOOD INSURANCE RATE MAP

ST. MARY PARISH, LOUISIANA
(UNINCORPORATED AREAS)

PANEL 125 OF 350
(SEE MAP INDEX FOR PANELS NOT PRINTED)

COMMUNITY-PANEL NUMBER
220192 0125 C

MAP REVISED:
AUGUST 3, 1992

Federal Emergency Management Agency

This is an official copy of a portion of the above referenced flood map. It was extracted using F-MIT On-Line. This map does not reflect changes or amendments which may have been made subsequent to the date on the title block. For the latest product information about National Flood Insurance Program flood maps check the FEMA Flood Map Store at www.msc.fema.gov

H.004932 : Interchange US 90 at LA 318

DOTD
LOUISIANA DEPARTMENT OF TRANSPORTATION & DEVELOPMENT

Environmental Section
PO Box 94245 | Baton Rouge, LA 70804-9245
ph: 225-242-4502 | fx: 225-242-4500

Bobby Jindal, Governor
Sherri H. LeBas, P.E., Secretary

July 29, 2015

STATE PROJECT NO.: H.004932
FEDERAL AID PROJECT NO.: H004932
NAME: INTERCHANGE US 90 @ LA 318
ROUTE: US 90
PARISH: ST. MARY

SUBJECT: SOLICITATION OF VIEWS, SUPPLEMENTAL ENVIRONMENTAL ASSESSMENT

In the planning stages of a transportation facility, views from federal, state, and local agencies, organizations, and individuals are solicited. The special expertise of these groups can assist the Louisiana Department of Transportation (DOTD) in conjunction with the Federal Highway Administration (FHWA) with the early identification of possible adverse economic, social, or environmental efforts or concerns. Your assistance in this regard will be appreciated.

We have attached a map showing the general location of the proposed project, along with a preliminary project description.

Views were previously solicited for this project as part of the 2007 *Stage 0 Feasibility Study*. Since the original solicitation, DOTD and FHWA have selected and approved Alternative E from the 2013 *Interchange for US 90 and LA 318 Environmental Assessment and Finding of No Significant Impact*. DOTD recently accepted a proposal for an Alternative Technical Concept (ATC) that would reduce the cost and impacts associated with the proposed interchange. We request that you review the attached information regarding the ATC and furnish us with your views and comments by **August 29, 2015**. Replies should be addressed to DOTD; Environmental Engineer Administrator; P.O. Box 94245; Baton Rouge, Louisiana 70804-9245. Please reference the State Project Number in your reply.

If you have any questions or require additional information, please contact Maria Bernard Reid at (225) 242-4506.

Sincerely,

N. Ardoin

Noel Ardoin
Environmental Engineer Administrator

RECEIVED
AUG 4 2015
ARCHAEOLOGY

enclosure

NA/mbr

cc: Project Manager
District Administrator
District Traffic Operations Engineer

No known historic properties will be affected by this undertaking. This effect determination could change should new information come to our attention.

Phil Boggan 9-4-15
Phil Boggan Date
Deputy State Historic Preservation Officer

DEPARTMENT OF THE ARMY
CORPS OF ENGINEERS, NEW ORLEANS DISTRICT
P. O. BOX 60267
NEW ORLEANS LA 70160-0267

SEP 0 9 2015

REPLY TO
ATTENTION OF

Operations Division
Operations Manager,
Completed Works

Ms. Noel Ardoin
Louisiana Department of Transportation
& Development
Environmental Engineer Adminstrator
Post Office Box 94245
Baton Rouge, Louisiana 70804-9245

Dear Ms. Ardoin:

This is in response to your Solicitation of Views request dated July 29, 2015, concerning the interchange project at US 90 at LA 18, in St. Mary Parish, Louisiana (State Project No. H004932).

We have reviewed your request for potential Department of the Army regulatory requirements and impacts on any Department of the Army projects.

We do not anticipate any adverse impacts to any Corps of Engineers projects.

Information and signatures obtained from recent maps, aerial photography, information provided with your request, and local soil surveys concerning this site are indicative of the occurrence of waters of the United States, including wetlands. Department of the Army (DA) permits are required prior to the deposition or redistribution of dredged or fill material into jurisdictional wetlands or waters. If an approved delineation is needed, please furnish us with the detailed field data concerning vegetation, soils, and hydrology that we require for all jurisdictional decisions. The fact that a field wetland delineation/determination has not been completed does not alleviate your responsibility to obtain the proper DA permits prior to working in jurisdictional wetlands or waters occurring on this property.

Off-site locations of activities such as borrow, disposals, haul-and detour-roads and work mobilization site developments may be subject to Department of the Army regulatory requirements and may have an impact on a Department of the Army project.

You should apply for said permit well in advance of the work to be performed. The application should include sufficiently detailed maps, drawings, photographs, and descriptive text for accurate evaluation of the proposal.

Please contact Mr. Robert Heffner, of our Regulatory Branch by telephone at (504) 862-1288, or by e-mail at Robert.A.Heffner@usace.army.mil for questions concerning wetlands determinations or need for on-site evaluations. Questions concerning regulatory permit requirements may be addressed to Mr. Darrell Barbara by telephone at (504) 862-2260 or by email at Darrell.Barbara@usace.army.mil.

Future correspondence concerning this matter should reference our account number MVN-2014-02171-MS. This will allow us to more easily locate records of previous correspondence, and thus provide a quicker response.

We apologize for missing the target date of August 29, 2015, listed in your request. Thank you for your patience in this matter.

Sincerely,

Karen L. Clement

Karen L. Clement
Solicitation of Views Manager

Public Meeting Notice

Supplemental Environmental Assessment

Proposed US Highway 90 / LA 318 Interchange
St. Mary Parish, LA

State Project No. 700-51-0110 / FAP Project No. DE-5109(501) /
ERP Project No. H.004932

The Louisiana Department of Transportation and Development (LADOTD) will host a Public Meeting to discuss plans for the proposed interchange at US Highway 90 and LA 318. This open forum Public Meeting will allow agencies, local representatives, and the public to review and comment on the proposed alternative layout, compare the impacts with those of the prior preferred alternative, and ask questions of the project team. The Public Meeting will be held at the following location:

Thursday, August 27, 2015 from 4:00 – 7:00 PM
West St. Mary Civic Center
1472 LA 318
Jeanerette, LA 70544

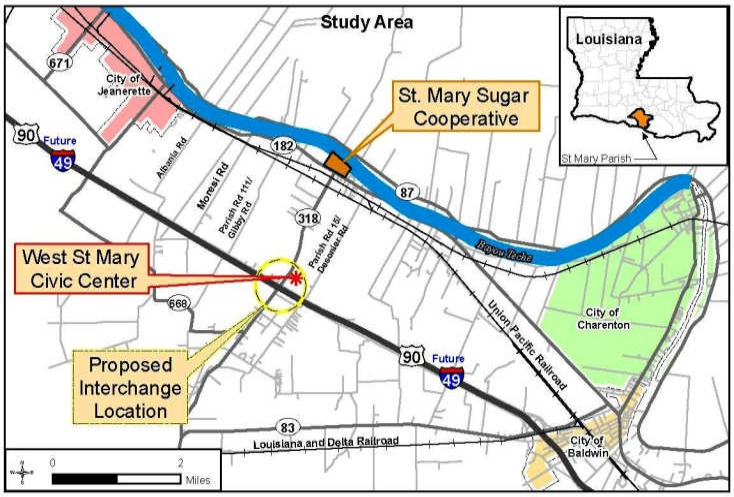

As part of the design/build process modifications to the preferred alternative, Alternative E, from the Final EA/FONSI dated October 2013 have been proposed. Both Alternative E and the proposed Alternative ATC are presented on the back of this notification. This proposed alternative will be displayed at the Public Meeting along with summary information showing the impacts with this new alternative compared against Alternative E.

Comments concerning the proposed alternative will be accepted through **September 6, 2015**, and may be submitted at the Public Meeting, via email to jonathan.w.martinez@aecom.com, and/or by US Mail to AECOM, 1515 Poydras Street, Suite 2700, New Orleans, LA. 70112, Attention: Jonathan Martinez.

Should you desire more information regarding this meeting or require special assistance to participate in the Public Meeting due to a disability, please contact AECOM at (504) 799-1376 at **least five working days** prior to the date of the meeting.

Proposed
US Highway 90 / LA 318 Interchange
St. Mary Parish, LA

Preferred Alternative Final EA/FONSI October 2013

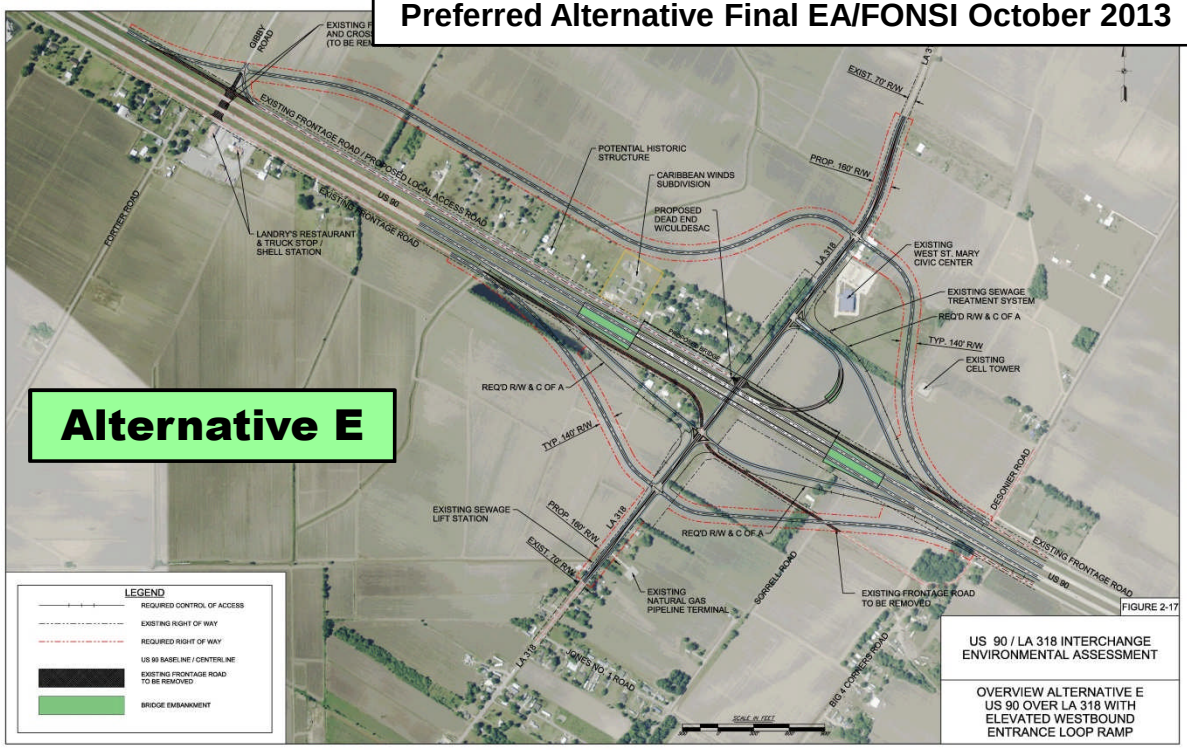

Revised Design/Build Proposed Alternative

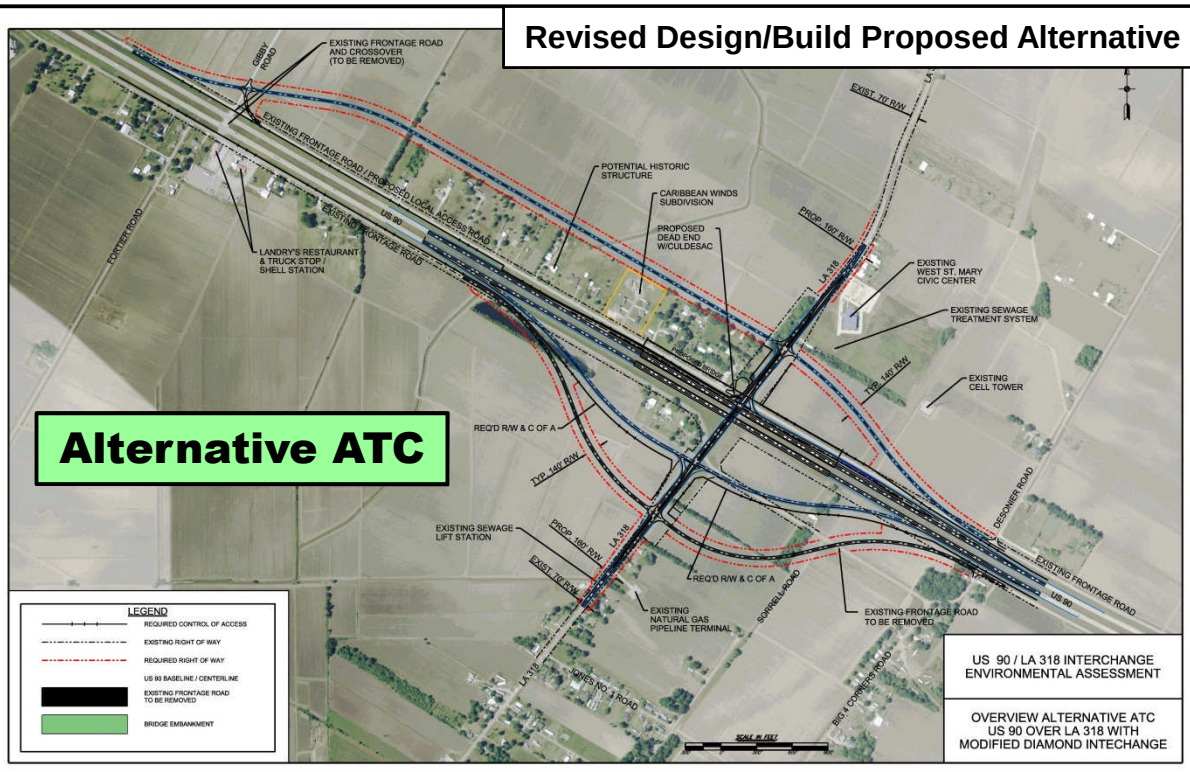

Ms. Karen Oberlis
US Army Corp of Engineers
New Orleans District -Tech Support Solicitation of Views Manager
7400 Leake Avenue
New Orleans, LA 70118

Mr. Kevin Norton
US Department of Agriculture
Natural Resources Conservation Service
3737 Government Street
Alexandria, LA 72302

Mr. Michael Bechdol
US Environmental Protection Agency
Source Water Protection (6WQ-S)
1445 Ross Avenue, Suite 1200
Dallas, TX 75202-2733

Honorable Steve J Scalise
US House of Representatives
District 1
110 Veterans Memorial Blvd., Ste 201
Metairie, LA 70005

Honorable Cedric Richmond
US House of Representatives
District 2
2021 Lakeshore Drive, Ste 309
New Orleans, LA 70122

Honorable Charles Boustany, Jr
US House of Representatives
District 3
800 Lafayette Street, Suite 1400
Lafayette, LA 70501

Honorable John Fleming
US House of Representatives
District 4
6425 Youree Drive, Suite 350
Shreveport, LA 71105

Honorable Ralph Abraham
US House of Representatives
District 5
417 Cannon House Office Building
Washington, DC 20515

Honorable Garret Graves
US House of Representatives
District 6
2351 Energy Drive, Suite 1200
Baton Rouge, LA 70808

Senator Mary Landrieu
US Senate
707 Florida Street
Baton Rouge, LA 70801

Senator Bill Cassidy M.D.
US Senate
5555 Hilton Avenue, Suite 100
Baton Rouge, LA 70808

Senator David Vitter
US Senate
2800 Veterans Memorial Blvd, Suite 201
Metairie, LA 70002

US Geological Survey
3535 S Sherwood Forest, Ste 120
Baton Rouge, LA 70806

8th Coast Guard District (NO)
District Commander
500 Poydras Street
New Orleans, LA 70130

Karen Clement
Department of the Army
New Orleans District Complete Works
P.O. Box 60267
New Orleans, LA 70160-0267

FEMA Region VI
FRC 800 North Loop 288
Denton, TX 76209

Federal Transit Administration
Region 6
819 Taylor Street, Rm 8A36
Fort Worth, TX 76102

Anita Jackson
National Park Service
Southeast Region
100 Alabama Street SW, 1924 Bldg
Atlanta, GA 30303

National Marine Fish Service
Habitat Conservation Division
LSU Center for Wetland Res
c/o LSU, Military Science Bldg, Room 266
Baton Rouge, LA 70803

Kevin Billiot
Inter-Tribal Council of LA, Inc.
Director
9901 Grand Caillou Rd
Houma, LA 70363

LA Department of Agriculture and Forestry
Office of Forestry Program Director
P.O. Box 1628
Baton Rouge, LA 70821

LA Department of Agriculture and Forestry
Office of Soil/Water Conservation
P.O. Box 3554
Baton Rouge, LA 70821

LA Department of Economic Development
Office of Business Development
P.O. Box 94185
Baton Rouge, LA 70804

LA Department of Public Safety
Highway Safety Commission
P.O. Box 66336
Baton Rouge, LA 70896

Yuanda Zhu
LA Department of Health and Hospitals
Division of Environmental Health
P.O. Box 4489
Baton Rouge, LA 70821

LA Department of Culture, Recreation and Tourism
Division of Archaeology
P.O. Box 44247
Baton Rouge, LA 70804

LA Department of Culture, Recreation and Tourism
Offfice of State Parks
P.O. Box 44426
Baton Rouge, LA 70804

Ms. Joanna Gardner
LA Department of Environmental Quality
Office of the Secretary
602 N. Fifth Street
Baton Rouge, LA 70802

Tenney Sibley
LA Department of Health and Hospitals
Chief Sanitarian
P.O. Box 629
Baton Rouge, LA 70821

LA Department of Natural Resources
Office of Mineral Resources
P. O. Box 2827
Baton Rouge, LA 70821

Mr. James Welsh
LA Department of Natural Resources
Commissioner Office of Conservation
P.O. Box 94275
Baton Rouge, LA 70804

Ms. Sandra Batten
LA Department of Transportation and Development
Floodplain Management Program
8900 Jimmy Wedell
Baton Rouge, LA 70807

Ms. Amity Bass
LA Department of Wildlife and Fisheries
Natural Heritage Program
P.O. Box 98000
Baton Rouge, LA 70898

Mr. Buck Vandersteen
Louisiana Forestry Association
P.O. Box 5067
Alexandria, LA 71307

Mr. Preston Eggers
LA Good Roads Association
P.O. Box 3713
Baton Rouge, LA 70821

Honorable Sam Jones
LA House of Representatives
District 50
733 Main Street
Franklin, LA 70538

Honorable Joe Harrison
LA House of Representatives
District 51
P.O. Drawer 1809
Gray, LA 70359-1809

Honorable R.L. "Bret" Allain
LA State Senate
District 21
600 Main Street
Franklin, LA 70538

Director Mark Ford
LA Office of Indian Affairs
150 N. Third
Baton Rouge, LA 70801

Division of Administration
Facility Planning & Control
P.O. Box 94095
Baton Rouge, LA 70804

Division of Administration
State Land Office
P.O. Box 44124
Baton Rouge, LA 70804

Ms. Ruth Johnson
LA Office of Management and Finance
P.O. Box 3776
Baton Rouge, LA 70821

Mr. James Caldwell
LA State Attorney General
Environmental Out Reach Division
1885 N. 3rd Street
Baton Rouge, LA 70802

Kimberly Reyher
Coalition to Restore Coastal Louisiana
Executive Director
6160 Perkins Road, Ste 225
Baton Rouge, LA 70808

James Wilkens
Louisiana State University
Sea Grant Legal Advisory Service
227B Sea Grant Building
Baton Rouge, LA 70803

Anne Perry
Nicholls State University, SLEC
Programs Manager
P.O. Box 2048-NSU
Thibodeaux, LA 70310

Mayor Raymond Harris
City of Franklin
300 Iberia Street
Franklin, LA 70538-3860

Mayor Donna Lanceslin
Town of Baldwin
800 Main Street
Baldwin, LA 70514-213

Mayor April Foulcard
City of Jeanerette
1010 Main Street
Jeanerette, LA 70544

Louisiana State Police
Troop C
4047 West Park
Gray, LA 70359

Louisiana State Police
Troop I
121 East Pont Des Mouton
Lafayette, LA 70507

Linda Langley
Coushatta Tribe of Louisiana
THPO
P.O. Box 818
Elton, LA 70532

Kimberly Walden
Chitimacha Tribe of Louisiana
Cultureal Director
P.O. Box 661
Charenton, LA 70523

Earl J Barbry, Jr
Tunica-Biloxi Tribe of Louisiana
THPO
P.O. Box 1589
Marksville, LA 71351

Cajun Coast Visitors & Convention Bureau
Executive Director
P.O. Box 2332
Morgan City, LA 70381

Acadiana Planning Commission
Director
P.O. Box 568
Carencro, LA 70520

Patterson Planning Commission
Chairman
P.O. Box 367
Patterson, LA 70392

Hon. Paul Naquin, Jr.
St Mary Parish
Parish President
500 Main St. Courthouse 5th Floor
Franklin, LA 70538

Ms. Tammy Luke
St Mary Parish Government
Director of Planning
Floodplain Administrator
500 Main St. Courthouse 5th Floor
Franklin, LA 70538

Mr. Mark Hebert
St Mary Parish Sheriff
P.O. BOX 571
Franklin, LA 70538

St Mary Soil & Water
Conservation District
500 Main St. Courthouse Room 310
Franklin, LA 70538

St. Mary Parish
Civil Defense
P.O. Box 247
Patterson, LA 70392

St Mary Parish School Board
P. O. Box 170
Centerville, LA 70522

Mr. Mark Chauvin
St Mary Parish Farm Bureau Federation
Parish President
1500 Hospital Avenue
Franklin, LA 70538

Morgan City Harbor & Terminal
Dist-Port of Morgan City
P.O. 1460
Morgan City, LA 70381

Chamber of Commerce
St Mary - Franklin
600 Main Street
Franklin, LA 70538

Chamber of Commerce
St. Mary Parish
727 Myrtle Street
Morgan City, LA 70380

Ms. Anne M. Perry
LA Economic Development
Programs Manager
P.O. Box 395
Patterson, LA 70392

Sirname First Name Last Name
Title
Elected Position Organizaion
Address Line 1
City, ST ZIP Code

Mr. Vic Lafont
South Louisiana Economic Council
P.O. Box 2048-NSU
Thibodaux, LA 70310

Executive Director Carrie Stansbury
Cajun Coast Visitors & Convention Bureau
P.O. Box 2332
Morgan City, LA 70381

Lisa Maher
Couhig Partners, LLC
c/o Caribbean Winds Subdivision
643 Magazine Street, Suite 300
New Orleans, LA 70130

St. Mary Community Action Association
P.O. Box 271
Franklin, LA 70538

Lorna Bourg
Southern Mutual Help Association, Inc.
Chief Executive Officer
3602 Old Jeanerette Road
New Iberia, LA 70563

Director Virginia Sutton
West St Mary Civic Center
P. O. Box 579
Franklin, LA 70538

Mr. Ronnie Harris
I-49 International Coalition
Vice President
P.O. Box 404
Gretna, LA 70054

Director David Allain
Port of West St Mary
15301 Highway 182 W
Franklin, LA 70538

Mr. Ted McIntyre
Marine Turbine Technologies
298 Louisiana Road
Franklin, LA 70538-7607

Mr. Steve Barras
National Oilwell Varco
254 B. E. Boudreaux
Franklin, LA 70538

Mr. Cameron Webster
Twin Brothers Marine
Hwy. 83 South
Louisa, LA 70538

Mr. David Groner
Sustainable Fuels
230 West Main
New Iberia, LA 70560

Mr. Lance Ortemond
D & L Salvage, LLC
P. O. Box 309
Lydia, LA 70569

Mr. Harry Schwartz
Gulfport Energy Corp.
197 Ivanhoe / Texaco Lane
Franklin, LA 70538

Mr. Ronald Guillotte
St. Mary Sugar Co-Op
General Manager
20056 Hwy 182 West
Jeanerette, LA 70544-8532

Mr. Rivers Patout
Sterling Sugars
611 Irish Bend Road
Franklin, LA 70538

Mr. Craig Caillier
Patout Sugar
COE
3512 J. Patout Burns Road
Jeanerette, LA 70544

Mr. Robert Roane
Sugar Jeanerette Co., Inc.
President
209 Virginia St.
Jeanerette, LA 70544

Mr. Andy Lanie
P.O. Box 588
Youngsville, LA 70592

Mr. Johnny Sutton
1133 Big Four Corners Road
Jeanerette, LA 70544

Ms. Ella Stacy
2003 Highway 318
Jeanerette, LA 70544

Mr. Bobbie Marks
536 Big Four Corners Road
Jeanerette, LA 70544

Ms. Claudia Brent
132 Johnson Lane
Jeanerette, LA 70544

Mr. Lawrence Bowie
223 Gibbs Road
Franklin, LA 70538

Ms. Olivia Patrick
1506 Hwy 318
Jeanerette, LA 70544

Ms. Arlene Patrick
1506 Hwy 318
Jeanerette, LA 70544

Constable Edward Patrick
1506 Hwy 318
Jeanerette, LA 70544

Mr. Ralph Ward
1052 Highway 318
Jeanerette, LA 70544

Mr. Ralph Longman
5843 LA 83
Franklin, LA 70538

Mr. Kevin Leblanc
20262 Hwy 90 W Frontage Road
Jeanerette, LA 70544

Mr. Edwin J. Hebert, Jr.
20238 Hwy 90 W Frontage Road
Jeanerette, LA 70544

Ms. Mary Louviere Hebert
P.O. Box 577
Charenton, LA 70523

Mr. Matthew James Richard
20216 Hwy 90 W Frontage Road
Jeanerette, LA 70544

Mr. Clifford Collins
20212 Hwy 90 W Frontage Road
Jeanerette, LA 70544

Mr. Claude Charles, Sr.
20208 Hwy 90. W Frontage Road
Jeanerette, LA 70544

Ms. Monique Latell Yelling
109 Caribbean Drive
Jeanerette, LA 70544

Mr. Micheal S. Trosclair
117 Caribbean Drive
Jeanerette, LA 70544

Mr. James L. Gabriel
124 Caribbean Drive
Jeanerette, LA 70544

Mr. James Berard
118 Caribbean Drive
Jeanerette, LA 70544

Mr. Donald V. Umphries
110 Caribbean Drive
Jeanerette, LA 70544

Mr. Ronald Washington
20160 Hwy 90 W. Frontage Road
Jeanerette, LA 70544

Ms. Tanya Lynn Hebert
20146 Hwy 90 Frontage Road
Jeanerette, LA 70544

Mr. Octave J. Gary Jr.
20146 Hwy 90 Frontage Road
Jeanerette, LA 70544

Mr. Patrick J. Verret
20126 Hwy 90 W Frontage Road
Jeanerette, LA 70544

Mr. Keith Joseph Chouest, Jr.
20126 Hwy 90 W Frontage Road
Jeanerette, LA 70544

Mr. Alton Stacy
20110 Hwy 90 W Frontage Road Lot 3
Jeanerette, LA 70544

Sirname First Name Last Name
Title
Elected Position Organizaion
Address Line 1
City, ST ZIP Code

Mr. Rupert F. Addison
P.O. Box 577
Jeanerette, LA 70544

Mr. Ollie J. Armelin
500 Bayard St
New Iberia, LA 70560

Ms. Sheila Ann Smith
c/o Jacob L. Cowart
P.O. Box 735
Franklin, LA 70538

Mr. Mauver Smith
21102 Hwy 90 W Frontage Road
Jeanerette, LA 70544

Mr. William J. Stacy
20104 Hwy 90 W Frontage Road
Jeanerette, LA 70544

Ms. Kim Booty
c/o Clayton C. Schevikhoven
9001 Sheldon Chase Drive
Tampa, FL 33635

Ms. Carole Vollmer
Vollmer Carole Close Trust Trustee
976 Old State Road 570
Ranchos De Taos, NM 87557

Mr. Ferdinand J. Petitfils, Jr.
c/o Marsha Colley
P.O. Box 742
Baldwin, LA 70514

Ms. Viola Cerf
c/o Ella Louise Jackson
4815 Sayers
Houston, TX 77026

Ms. Ella L. Jackson
4815 Sayers Sayers Street
Houston, TX 77026

Ms. Betty Joyce Tillman
1516 Hwy 318
Jeanerette, LA 70544

Ms. Barbara Matthews
1512 Hwy 318
Jeanerette, LA 70544

Mr. Edward Patrick, Jr.
1506 Hwy 318
Jeanerette, LA 70544

Mr. Paul M. Comeaux
106 Cambridge Drive
Belle Chase, LA 70037

Mr. Patrick Hebert
2027 Hwy 182 East
Morgan City, LA 70380

Mr. Alexander Roeman EST ET AL
20103 SO Radlett Avenue
Carson, CA 90746

Ms. Dorothy G. Landry
c/o Paula Figueroa
P.O. Box 11621
New Iberia, LA 70562

Mr. Gaynell H. Sonnier
12505 Back Road
Jeanerette, LA 70544

Mr. Paul M Comeaux
809 Desonier Road
Jeanerette, LA 70544

Mr. Aaron Poledor
c/o Pelton Colar
1004 Martin Luther King Drive
Jeanerette, LA 70544

Ms. Celeste Trimble (EST)
c/o Marsha Colley
P.O. Box 742
Baldwin, LA 70514

Mr. Sam Ware, Jr.
183 Big Four Corner Road
Jeanerette, LA 70544

Mr. Joseph A. Koury
117 Huntington Drive
Lafayette, LA 70508

Ms. Mae Nell R. Stacy
210 Jones Road No 1
Jeanerette, LA 70544

Ms. Berdia L. R. Archield
5515 Chapman Street
Houston, TX 77009

Mr. Clarence Widow
925 E 18th Street
Port Arthur, TX 77640

Mr. Arnold J. Landry
296 Hwy 668
Jeanerette, LA 70544

Mr. Robert B. Patout
P.O. Box 786
Jeanerette, LA 70544

Mr. Gustavia J. Polidore
c/o Genevieve Gibson Newman
923 Woods Mill Road
Baldwin, MO 63011

Mr. Arthur Bergeron, Jr.
2138 Ritter
Jeanerette, LA 70544

Mr. Anatole J. Derouen, III
P.O. Box 436
Franklin, LA 70538

Mr. Manley C. Boudreaux
P.O. Box 516
Baldwin, LA 70514

Mr. Robert A. Legnon, Jr.
701 Landry Street
Jeanerette, LA 70544

Mr. Rivers M. Patout
12216 Black Road
Jeanerette, LA 70544