LEGEND

SEE SHEET TS-2 FOR LEGEND.

△ TO BE CONSTRUCTED FREE OF OBSTRUCTIONS

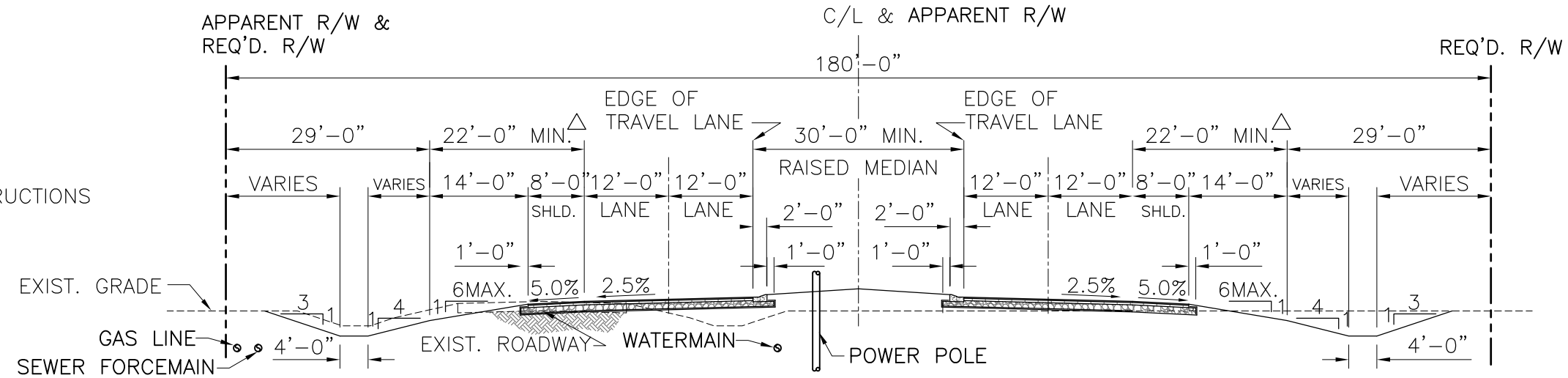

TYPICAL SECTION – LA 408 WIDENING TO THE SOUTHWEST (UA-4) (55mph)
AT-GRADE ROADWAY CENTERING ON EXISTING RIGHT-OF-WAY

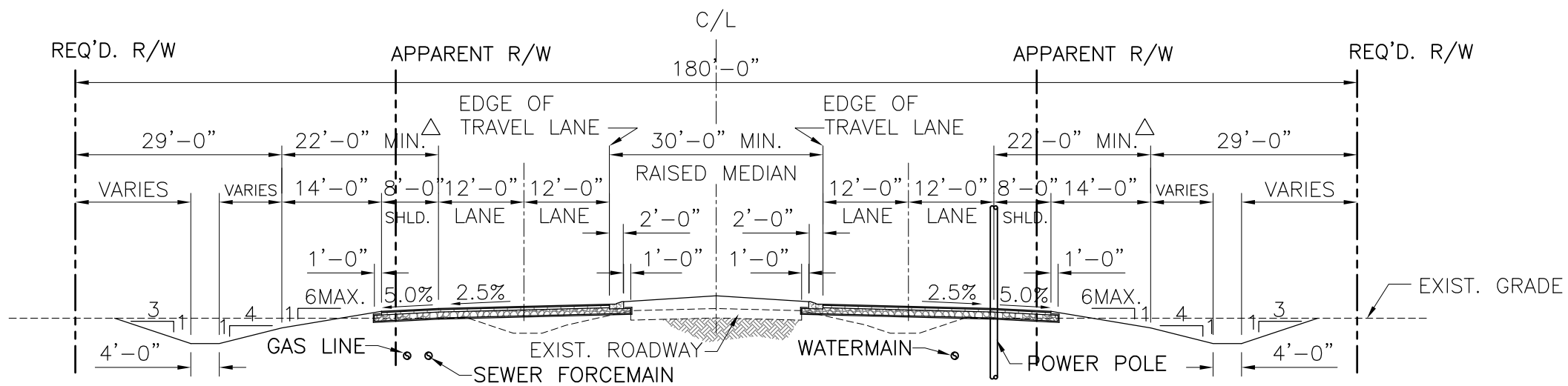

TYPICAL SECTION – LA 408 WIDENING EACH SIDE EQUALLY (UA-4) (55mph)
AT-GRADE ROADWAY CENTERING ON EXISTING RIGHT-OF-WAY

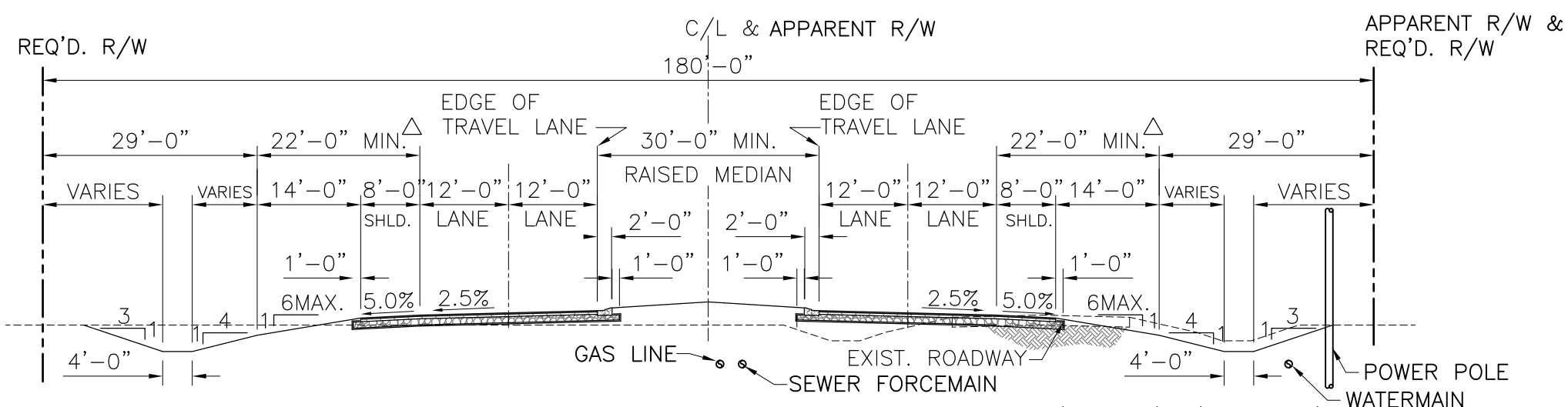

TYPICAL SECTION – LA 408 WIDENING TO THE NORTHEAST (UA-4) (55mph)
AT-GRADE ROADWAY CENTERING ON REQ'D. RIGHT-OF-WAY

20 0 20 40
SCALE IN FEET

SHEET TS-1

HOOPER ROAD EXTENSION – LA 408
ENVIRONMENTAL ASSESSMENT (EA) – STAGE 1
EAST BATON ROUGE & LIVINGSTON PARISHES

STATE PROJECT No. H.005403
FEDERAL AID PROJECT No. H005403

TYPICAL SECTIONS - ROADWAY AT-GRADE

ASSOCIATES, INC.
ENGINEERS • ARCHITECTS • PLANNERS
PROGRAM & PROJECT MANAGERS

DEPARTMENT OF TRANSPORTATION AND DEVELOPMENT
DOTD

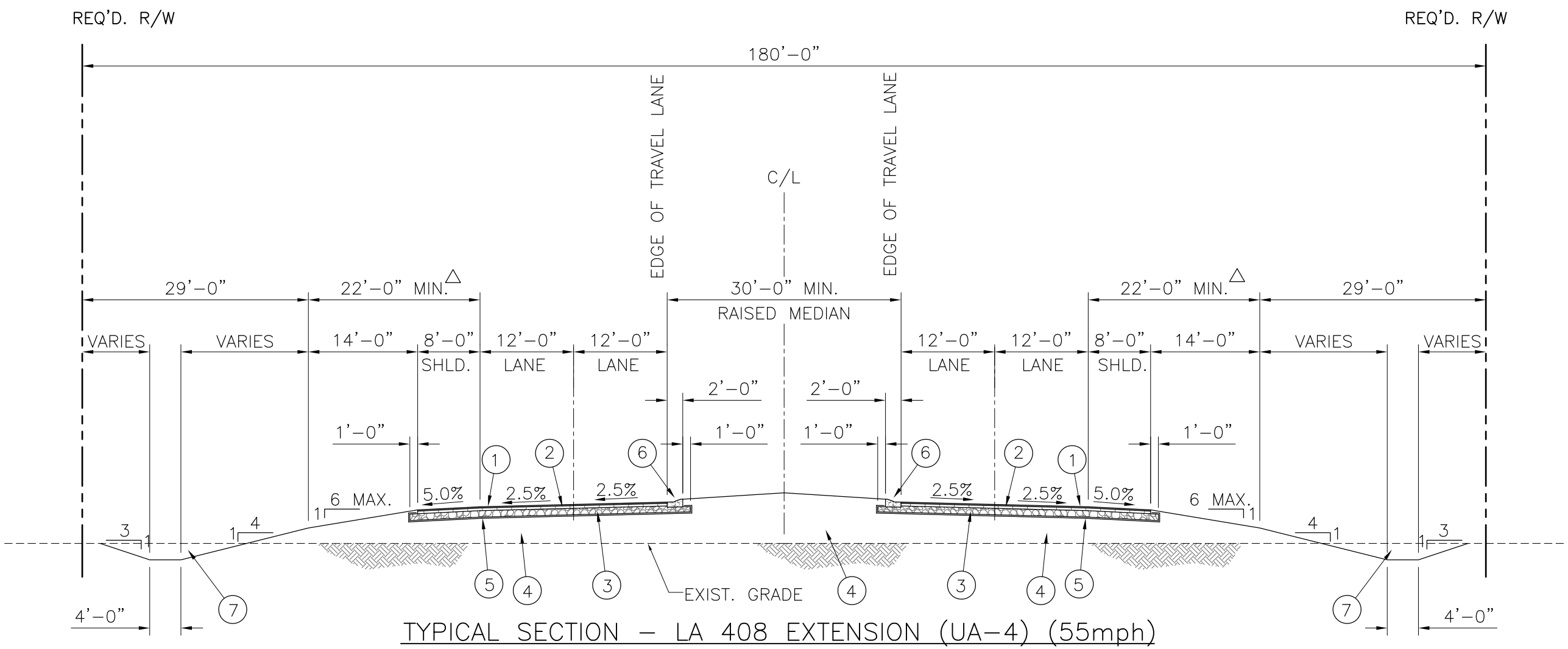

TYPICAL SECTION – LA 408 EXTENSION (UA-4) (55mph)
AT-GRADE ROADWAY

LEGEND

1. 2" SUPERPAVE ASPHALTIC CONCRETE (WEARING COURSE).
2. 6" SUPERPAVE ASPHALTIC CONCRETE (BINDER COURSE).
3. 10" CLASS II BASE COURSE (CRUSHED STONE OR RECYCLED PCCP).
4. EMBANKMENT MATERIAL.
5. GEOTEXTILE FABRIC
6. CONCRETE CURB AND GUTTER (MOUNTABLE TYPE)
7. EXCAVATION

△ TO BE CONSTRUCTED FREE OF OBSTRUCTIONS

15 0 15 30
SCALE IN FEET

SHEET TS-2

HOOPER ROAD EXTENSION – LA 408
ENVIRONMENTAL ASSESSMENT (EA) – STAGE 1
EAST BATON ROUGE & LIVINGSTON PARISHES
FEDERAL AID PROJECT No. H005403
STATE PROJECT No. H.005403

TYPICAL SECTIONS - ROADWAY AT-GRADE

ASSOCIATES, INC.
ENGINEERS • ARCHITECTS • PLANNERS
PROGRAM & PROJECT MANAGERS

DEPARTMENT OF TRANSPORTATION AND DEVELOPMENT
DOTD

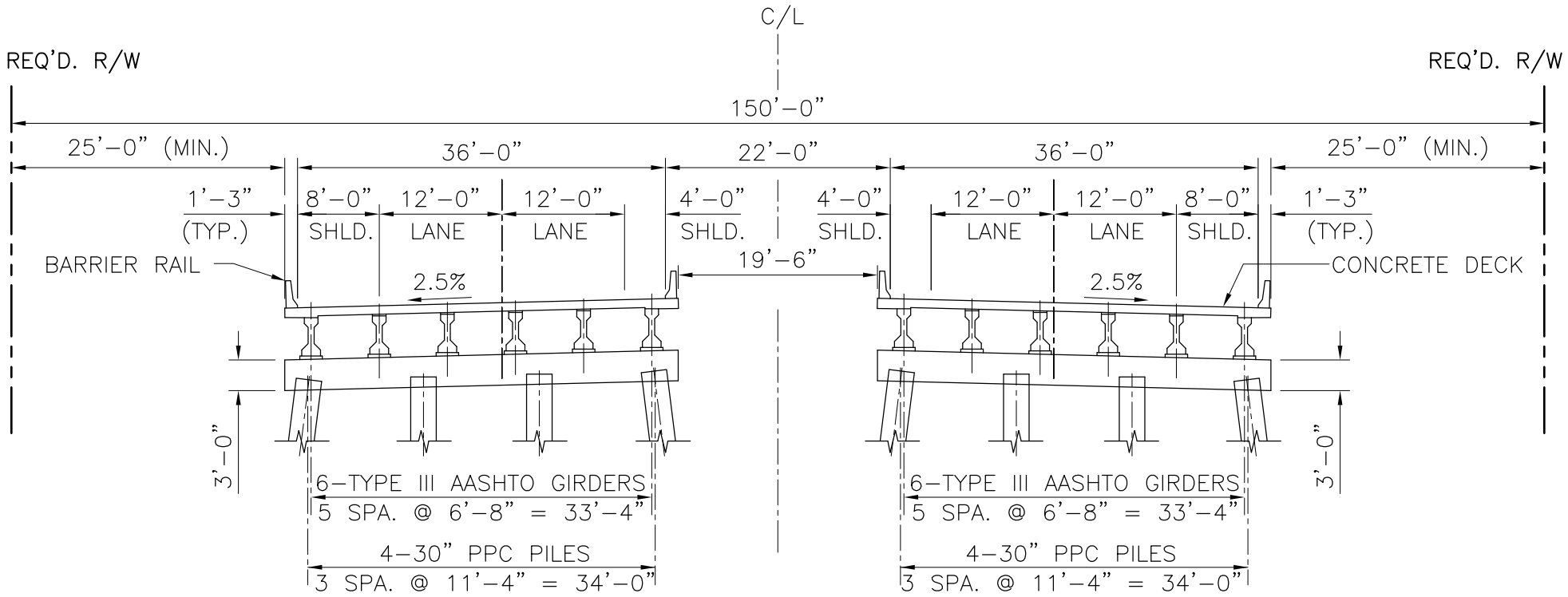

TYPICAL SECTION – LA 408 AMITE RIVER BRIDGE (UA-4) (55mph)
TYPE III AASHTO GIRDER SPAN – ASSUME 80' SPANS

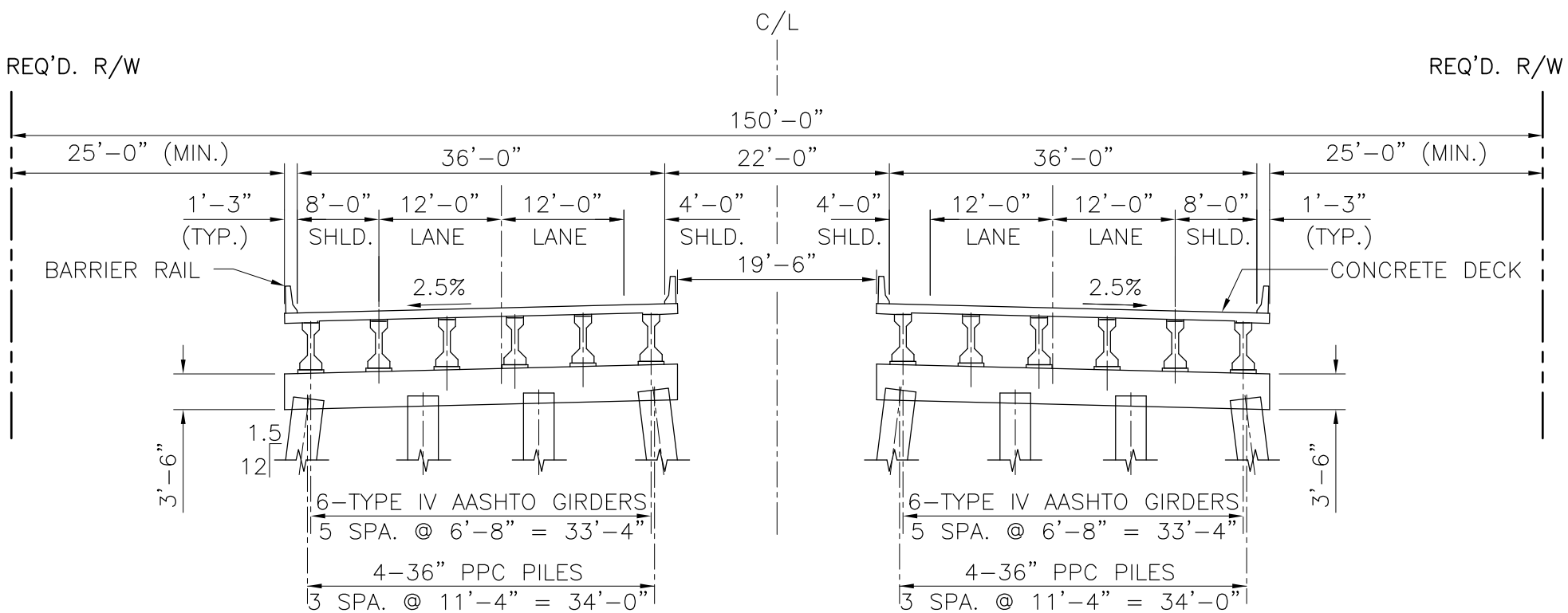

TYPICAL SECTION – LA 408 AMITE RIVER BRIDGE (UA-4) (55mph)
TYPE IV AASHTO GIRDER SPAN – ASSUME 95' SPANS

SHEET TS-3

HOOPER ROAD EXTENSION – LA 408
ENVIRONMENTAL ASSESSMENT (EA) – STAGE 1
EAST BATON ROUGE & LIVINGSTON PARISHES

STATE PROJECT No. H.005403
FEDERAL AID PROJECT No. H005403

TYPICAL SECTIONS - BRIDGE STRUCTURE

ASSOCIATES, INC.
ENGINEERS • ARCHITECTS • PLANNERS
PROGRAM & PROJECT MANAGERS

DEPARTMENT OF TRANSPORTATION AND DEVELOPMENT
DOTD

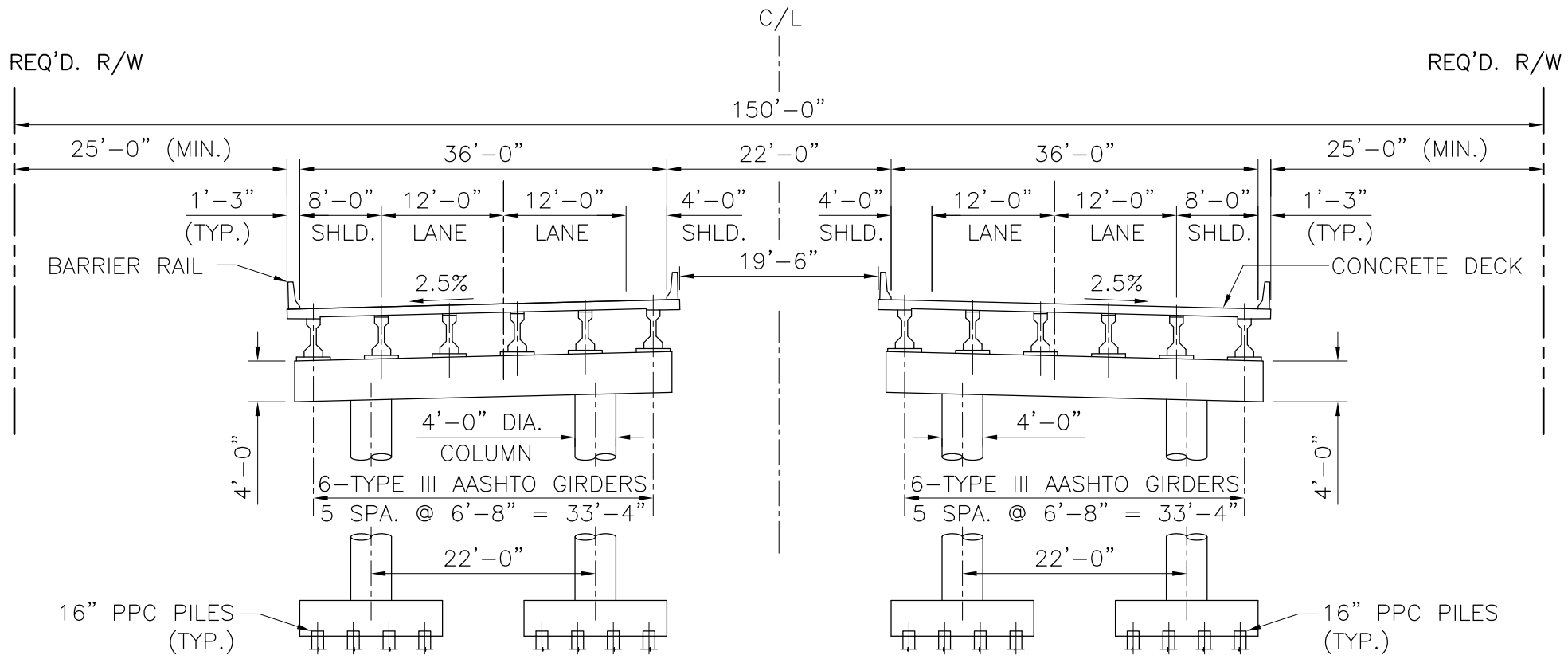

TYPICAL SECTION – LA 408 BRIDGE OVER LA 1020 (UA-4) (55mph)
TYPE III AASHTO GIRDER SPAN – ASSUME 80' SPANS

SHEET TS-4

HOOPER ROAD EXTENSION – LA 408
ENVIRONMENTAL ASSESSMENT (EA) – STAGE 1
EAST BATON ROUGE & LIVINGSTON PARISHES

STATE PROJECT No. H.005403
FEDERAL AID PROJECT No. H005403

TYPICAL SECTIONS - BRIDGE STRUCTURE

ASSOCIATES, INC.
ENGINEERS • ARCHITECTS • PLANNERS
PROGRAM & PROJECT MANAGERS

DEPARTMENT OF TRANSPORTATION AND DEVELOPMENT
DOTD

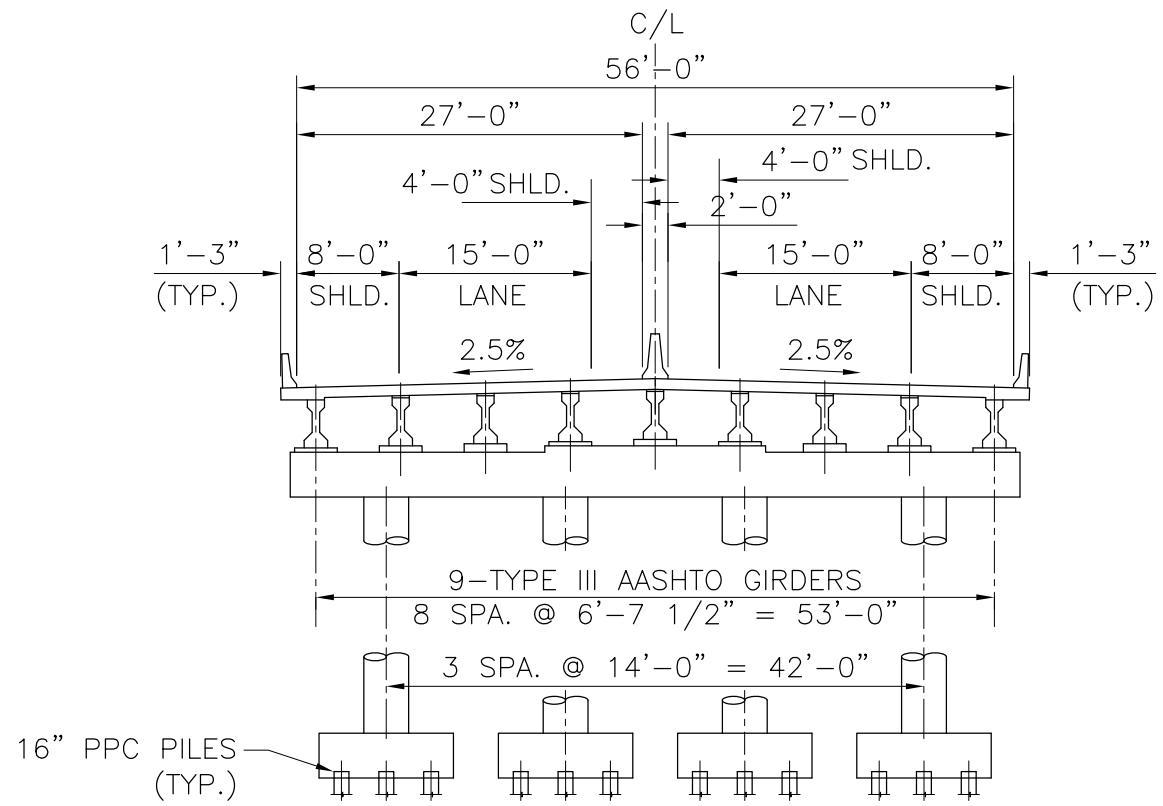

TYPICAL SECTION – LA 408 BRIDGE OVER LA 16 ALIGNMENT A (UA-4) (55mph)
TYPE III AASHTO GIRDER SPAN – ASSUME 85' SPANS

SHEET
TS-5

HOOPER ROAD EXTENSION – LA 408
ENVIRONMENTAL ASSESSMENT (EA) – STAGE 1
EAST BATON ROUGE & LIVINGSTON PARISHES
FEDERAL AID PROJECT No. H005403
STATE PROJECT No. H.005403

TYPICAL SECTIONS - BRIDGE STRUCTURE

ASSOCIATES, INC.
ENGINEERS • ARCHITECTS • PLANNERS
PROGRAM & PROJECT MANAGERS

DEPARTMENT OF TRANSPORTATION AND DEVELOPMENT
DOTD

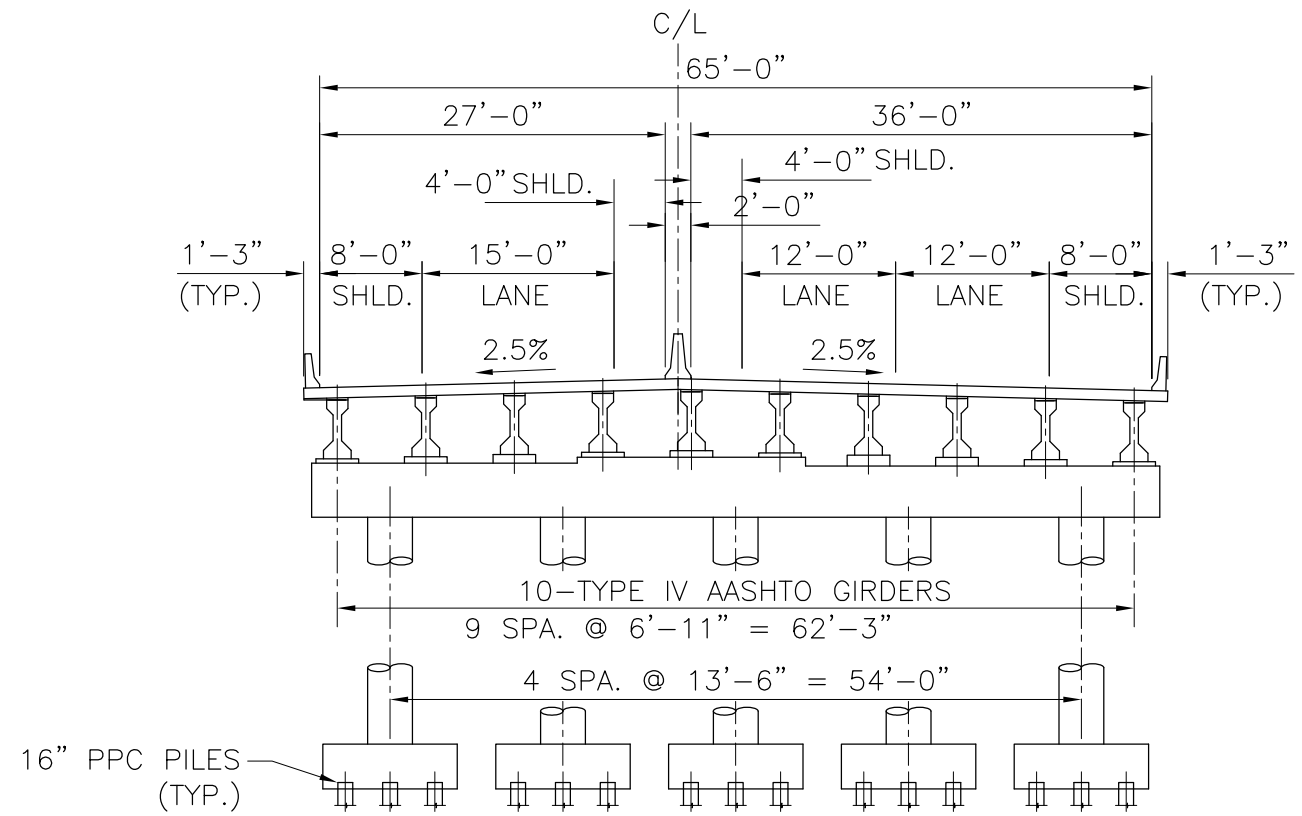

TYPICAL SECTION – LA 408 BRIDGE OVER LA 16 ALIGNMENT B (UA-2) (45mph)
TYPE IV AASHTO GIRDER SPAN – ASSUME 95' SPANS

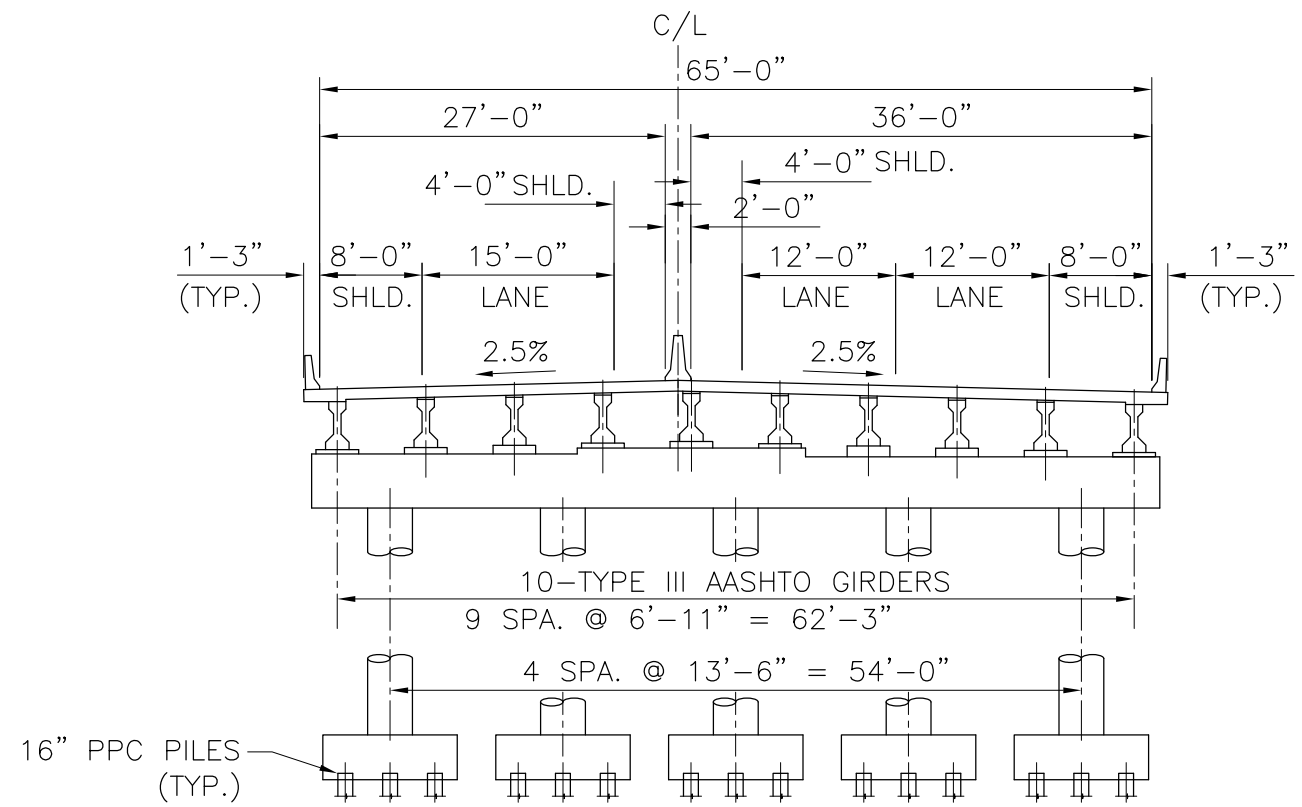

TYPICAL SECTION – LA 408 BRIDGE OVER LA 16 ALIGNMENT B (UA-2) (45mph)
TYPE III AASHTO GIRDER SPAN – ASSUME 70' SPANS

SHEET TS-6

HOOPER ROAD EXTENSION – LA 408
ENVIRONMENTAL ASSESSMENT (EA) – STAGE 1
EAST BATON ROUGE & LIVINGSTON PARISHES

STATE PROJECT No. H.005403 FEDERAL AID PROJECT No. H005403

TYPICAL SECTIONS - BRIDGE STRUCTURE

ASSOCIATES, INC.
ENGINEERS • ARCHITECTS • PLANNERS
PROGRAM & PROJECT MANAGERS

DEPARTMENT OF TRANSPORTATION AND DEVELOPMENT DOTD