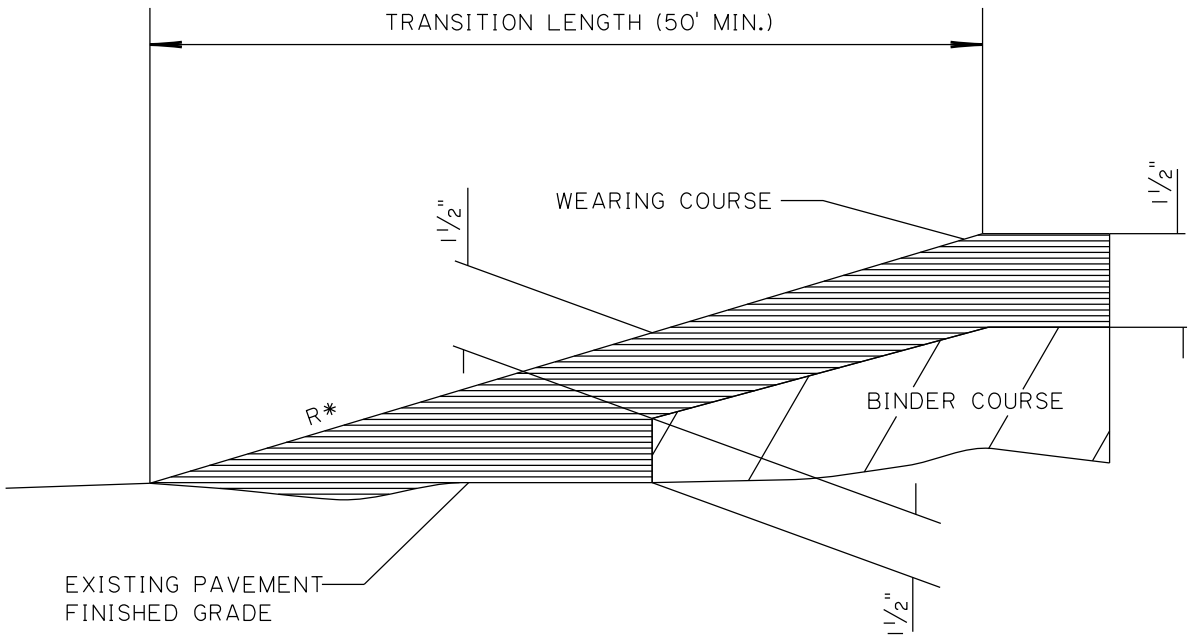

* 1' / 100' Max
Figure not to scale

Figure 4-11: Surfacing Transition Detail