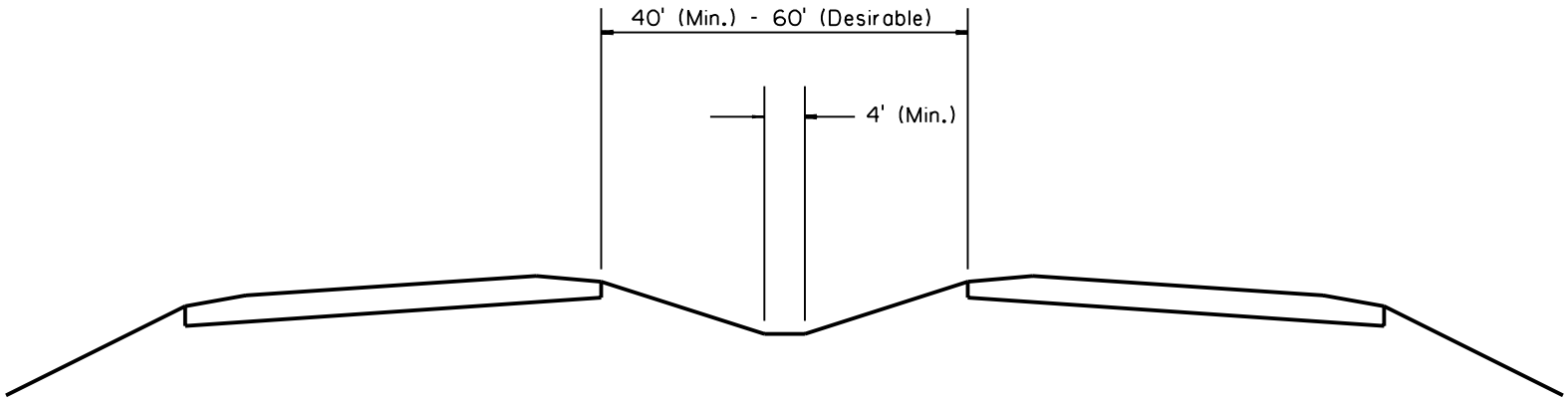

Figure 5-18: Depressed Median on Rural Roadways