8/10/2015 15:36
IP_PWP:dms55670\BD.2.6.1.14.01 - BR-01.dgn

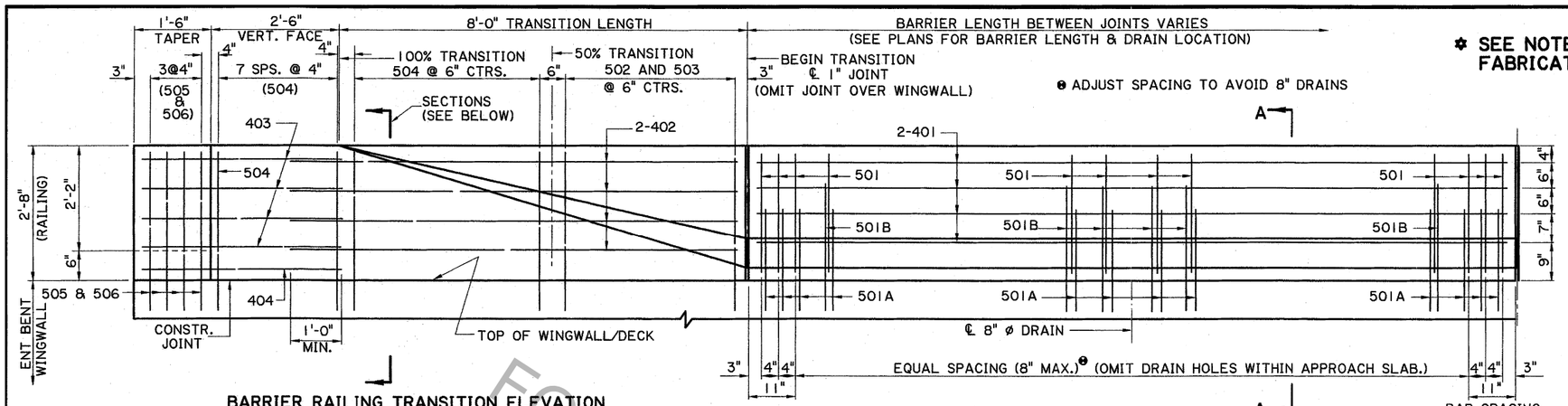

BARRIER RAILING TRANSITION ELEVATION

⊖ ADJUST SPACING TO AVOID 8" DRAINS

✲ SEE NOTE 2 PRIOR TO FABRICATING STEEL.

STANDARD BARRIER RAILING WITH 8" ø VERTICAL DRAINS

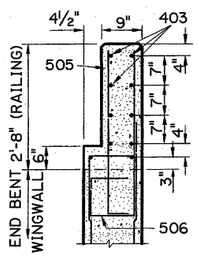

BLOCK OUT

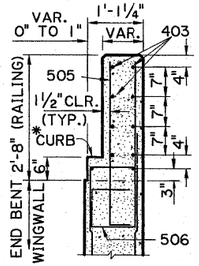

TAPER

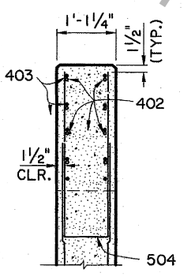

100% TRANSITION

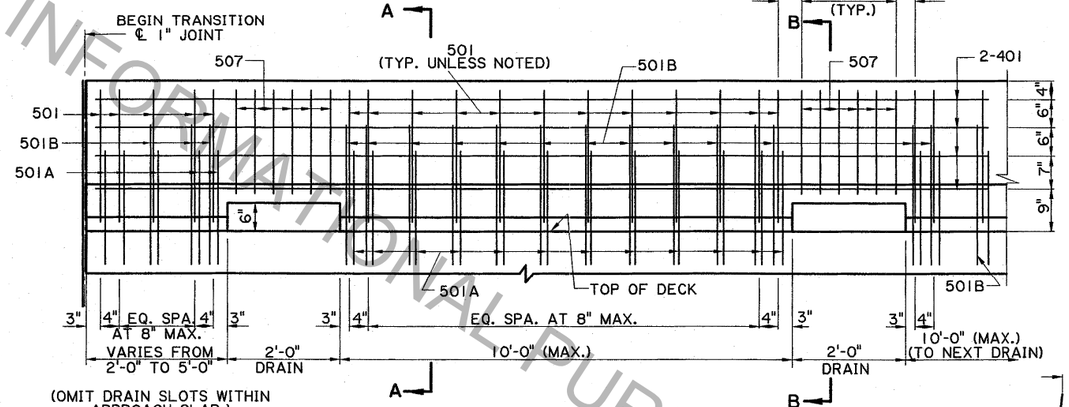

BARRIER RAILING WITH HORIZONTAL DRAIN SLOTS

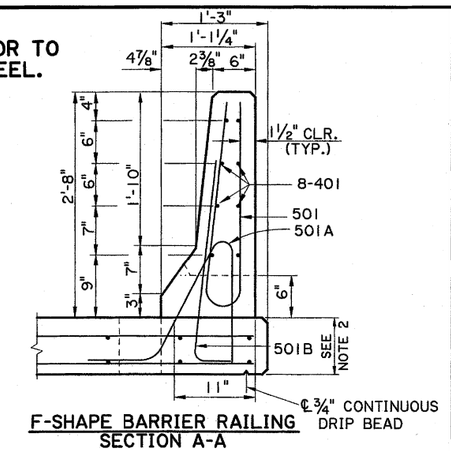

F-SHAPE BARRIER RAILING SECTION A-A

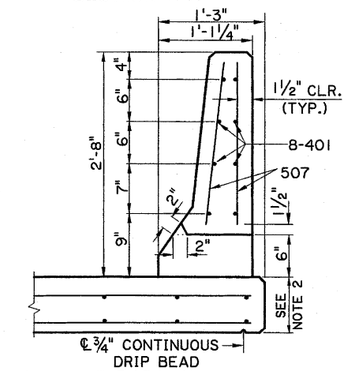

F-SHAPE BARRIER RAILING SECTION B-B

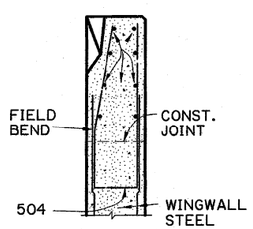

FROM 50% TO 100% TRANSITION

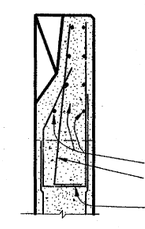

FROM BEGIN TO 50% TRANSITION

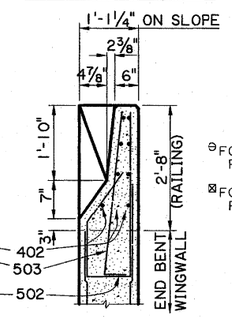

BEGIN TRANSITION

⊖ FOR 27" GUARD RAIL HEIGHT
⊠ FOR 28" GUARD RAIL HEIGHT

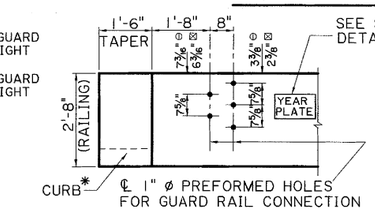

GUARD RAIL CONNECTION DETAIL

(FOR GUARD RAIL DETAILS, SEE STANDARD PLAN GR-200.)

STATE OF LOUISIANA
JUSTIN C. PELTIER
License No. 34765
PROFESSIONAL ENGINEER IN CIVIL ENGINEERING
5/8/2012

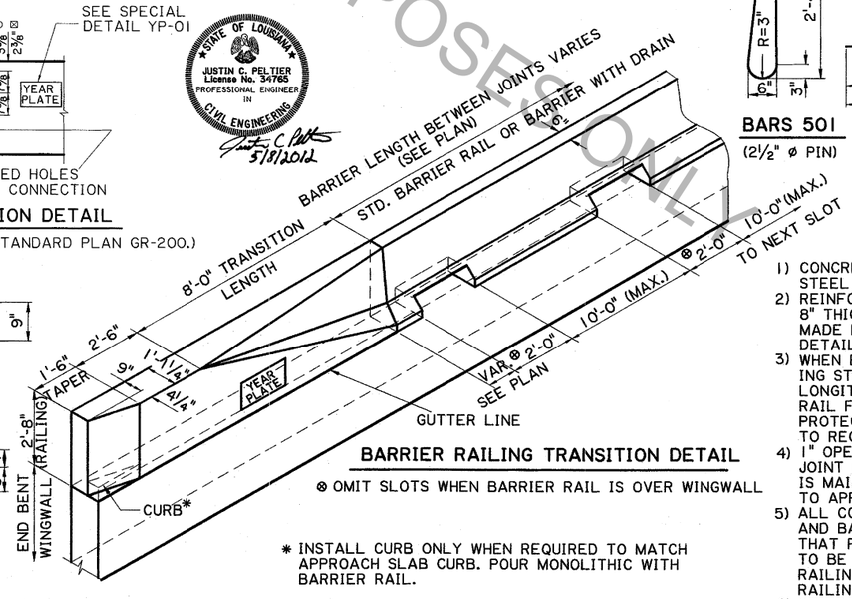

BARRIER RAILING TRANSITION DETAIL

⊗ OMIT SLOTS WHEN BARRIER RAIL IS OVER WINGWALL

✱ INSTALL CURB ONLY WHEN REQUIRED TO MATCH APPROACH SLAB CURB. POUR MONOLITHIC WITH BARRIER RAIL.

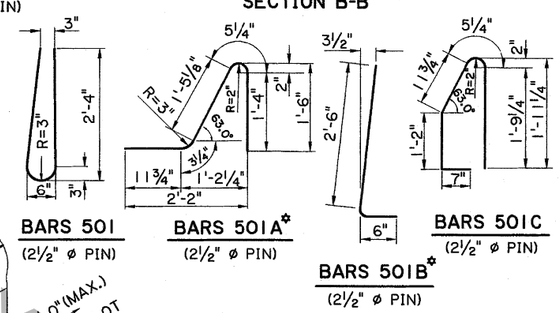

BARS 501 (2½" ø PIN)

BARS 501A✱ (2½" ø PIN)

BARS 501B✱ (2½" ø PIN)

BARS 501C (2½" ø PIN)

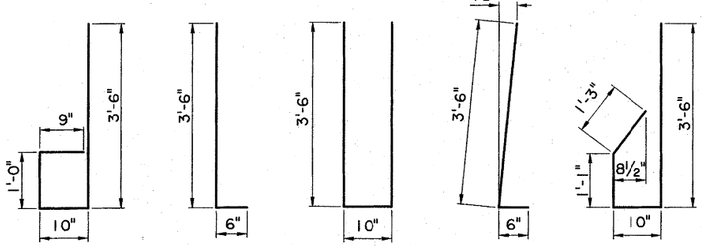

BARS 506✱ (2½" ø PIN)

BARS 505✱ (2½" ø PIN)

BARS 504✱ (2½" ø PIN)

BARS 503✱ (2½" ø PIN)

BARS 502✱ (2½" ø PIN)

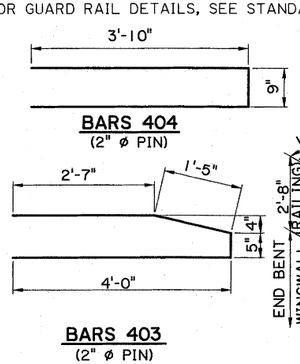

BARS 404 (2" ø PIN)

BARS 403 (2" ø PIN)

✱ SEE NOTE 2 PRIOR TO FABRICATING STEEL.

NOTES:

1) CONCRETE TO BE CLASS AA AND REINFORCING STEEL TO BE GRADE 60.
2) REINFORCING STEEL DIMENSIONS SHOWN ARE BASED ON AN 8" THICK SLAB UNDER BARRIER. ADJUSTMENTS MUST BE MADE FOR DECKS WITH OTHER THICKNESSES. SEE SPAN DETAILS.
3) WHEN EPOXY COATED OR GALVANIZED REINFORCING STEEL IS REQUIRED IN THE CONCRETE DECK, LONGITUDINAL BARS AND STIRRUPS IN THE BARRIER RAIL FACE (ROADWAY SIDE) SHALL HAVE THE SAME PROTECTION. ALL BARRIER RAIL SURFACES ARE TO RECEIVE A CLASS 2A SPECIAL SURFACE FINISH.
4) 1" OPEN JOINT TYPICAL. SAW CUTTING OF THE OPEN JOINT IS PERMITTED PROVIDED 1½" MIN. CLEARANCE IS MAINTAINED FOR REINFORCING STEEL AND SUBJECT TO APPROVAL OF THE ENGINEER.
5) ALL CONCRETE AND STEEL IN BARRIER RAILING AND BARRIER RAILING TRANSITION INCLUDING BARS THAT PROJECT FROM THE DECK INTO THE RAILING TO BE PAID FOR UNDER ITEM 810-01-00100 CONCRETE RAILING (STANDARD BARRIER) OR 810-01-00200 CONCRETE RAILING (SLOTTED BARRIER), PER LINEAR FOOT.
6) SEE BRIDGE GENERAL PLAN FOR BARRIER TYPE.
7) WHEN OVER WINGWALL, USE BARS 501C IN LIEU OF 501A.

FOR INFORMATIONAL PURPOSES ONLY

NO.	DATE	REVISION OR CHANGE ORDER DESCRIPTION	BY
	07/23/15	REVISED GUARD RAIL CONNECTION DETAIL	CMG

DESIGNED T. LE
CHECKED J. PELTIER
DETAILED G. GRASS
CHECKED J. PELTIER
PARISH
CONTROL SECTION
STATE PROJECT
SERIES NUMBER 1 OF 1
SHEET NUMBER

CAST-IN-PLACE BARRIER RAILING & TRANSITION (TRANSITION ON WINGWALL)

BD.2.6.1.14.01 - BR-01

BRIDGE & STRUCTURAL DESIGN