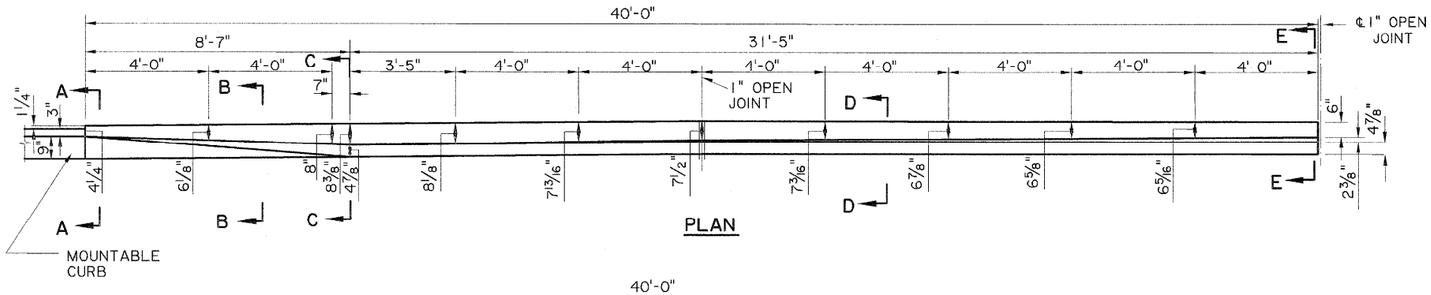

PLAN

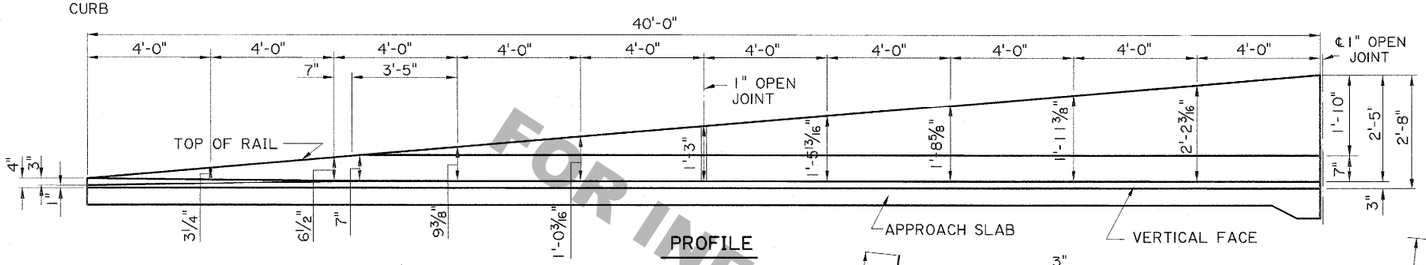

PROFILE

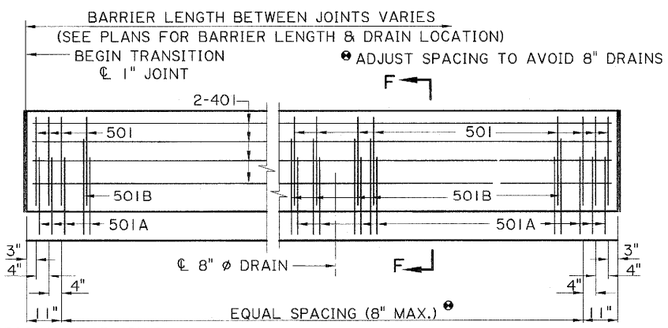

STANDARD BARRIER RAILING
WITH 8" ø VERTICAL DRAINS

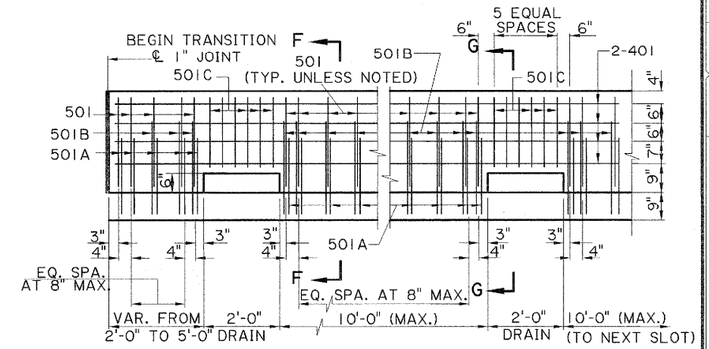

BARRIER RAILING WITH HORIZONTAL DRAIN SLOTS

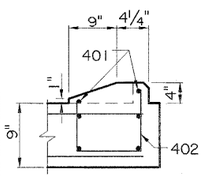

SECTION A-A

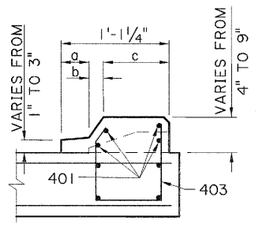

SECTION B-B
(FROM A TO C)

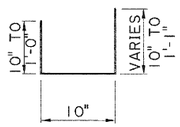

BARS 402
(2"ø PIN)

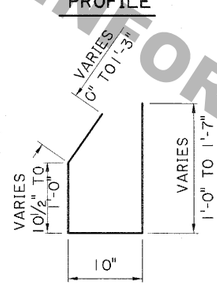

BARS 403
(2"ø PIN)

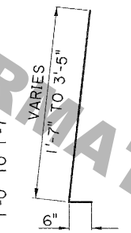

BARS 503
(2½"ø PIN)

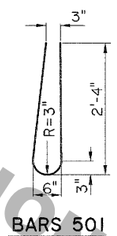

BARS 501
(4'-10" LONG)

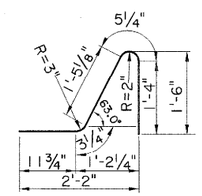

BARS 501A
(4'-5⅜" LONG)

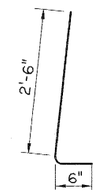

BARS 501B
(2½"ø PIN)
(3'-0" LONG)

a = VARIES FROM 9" TO 0"
b = VARIES FROM 0" TO 4⅞"
c = VARIES FROM 4¼" TO 8⅜"

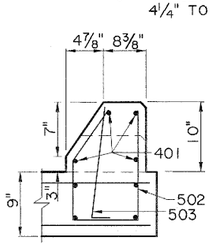

SECTION C-C

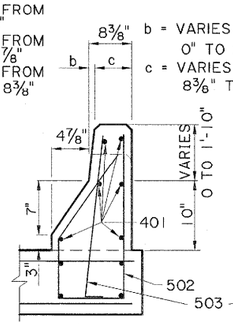

SECTION D-D
(FROM C TO E)

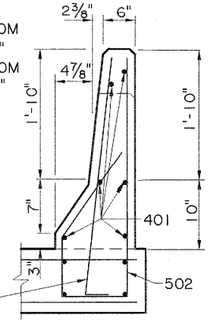

SECTION E-E

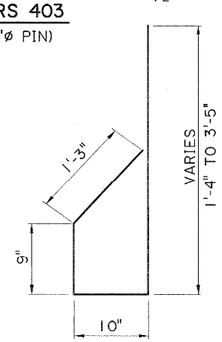

BARS 502
(2½" ø PIN)

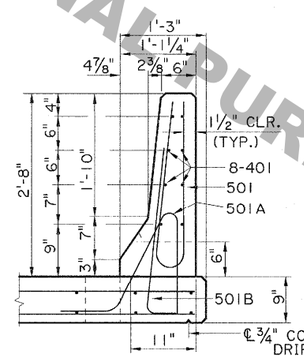

F-SHAPE BARRIER RAILING
SECTION F-F

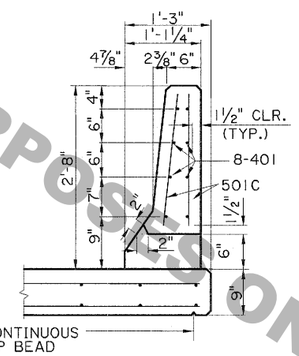

F-SHAPE BARRIER RAILING
SECTION G-G

NOTES:

1) CONCRETE TO BE CLASS AA AND REINFORCING STEEL TO BE GRADE 60. REINFORCING STEEL DIMENSIONS SHOWN ARE BASED ON 9" THICK SLAB UNDER BARRIER. ADJUSTMENTS MUST BE MADE FOR DECKS WITH OTHER VALUES.
2) WHEN EPOXY COATED OR GALVANIZED REINFORCING STEEL IS REQUIRED IN THE CONCRETE DECK, LONGITUDINAL BARS AND STIRRUPS IN THE BARRIER RAIL FACE (ROADWAY SIDE) SHALL HAVE THE SAME PROTECTION. ALL BARRIER RAIL SURFACES ARE TO RECEIVE A CLASS 2A SPECIAL SURFACE FINISH.
3) 1" OPEN JOINT TYPICAL. SAW CUTTING OF THE OPEN JOINT IS PERMITTED PROVIDED 1½" MIN. CLEARANCE IS MAINTAINED FOR REINFORCING STEEL AND SUBJECT TO APPROVAL OF THE ENGINEER.
4) ALL CONCRETE AND STEEL IN BARRIER RAILING AND BARRIER RAILING TRANSITION INCLUDING BARS THAT PROJECT FROM THE DECK INTO THE RAILING TO BE PAID FOR UNDER ITEM 810-01-00100 CONCRETE RAILING (STANDARD BARRIER), OR 810-01-00200 CONCRETE RAILING (SLOTTED BARRIER), PER LINEAR FOOT.
5) SEE GENERAL PLAN FOR BARRIER TYPE.

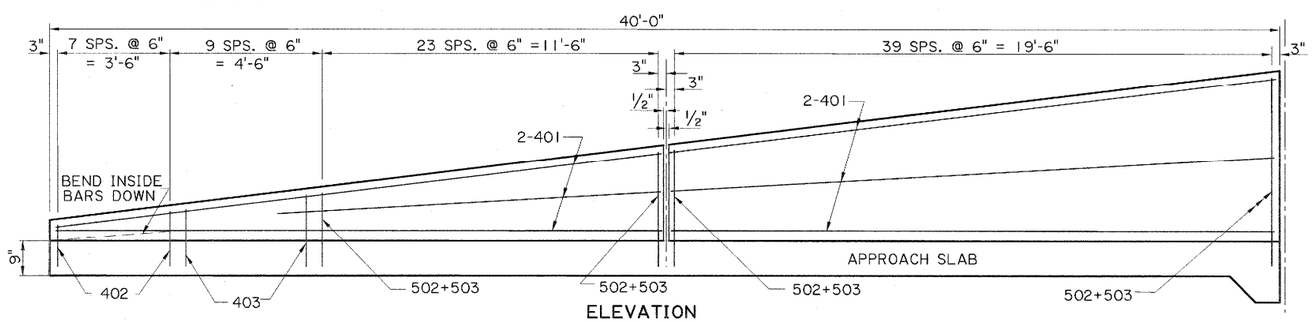

ELEVATION
(SHOWING REINFORCING STEEL)
(NTS)

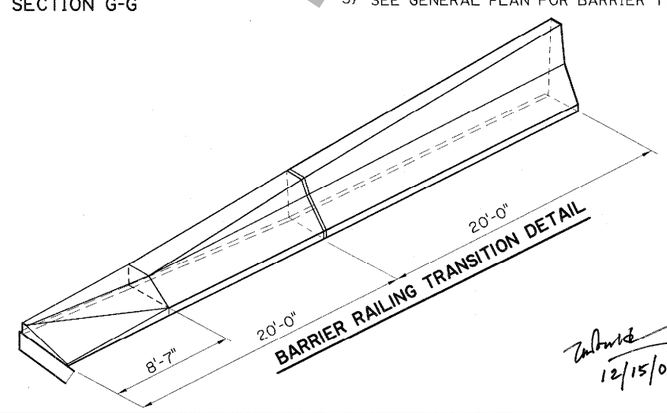

BARRIER RAILING TRANSITION DETAIL

STATE OF LOUISIANA
TRINH T. LE
REG. No. 25173
PROFESSIONAL ENGINEER IN CIVIL ENGINEERING
12/15/08

FOR INFORMATIONAL PURPOSES ONLY

SHEET NUMBER | PARISH | FEDERAL PROJECT | STATE PROJECT
DESIGNED T.L.E. | CHECKED J. PELTIER | DETAILED G. GRASS | CHECKED J. PELTIER | DATE DEC.,2008 | SHEET
NO. | DATE | REVISION DESCRIPTION

STATE OF LOUISIANA DEPARTMENT OF TRANSPORTATION AND DEVELOPMENT

BRIDGE AND STRUCTURAL DESIGN

BARRIER RAILING DETAILS
(LOW SPEED URBAN TRANSITION)

BR-03