* DIMENSIONS MARKED THUS ARE TO THE INTERSECTION POINT OF THE BARRIER SLOPES. CONSTRUCT THE 10" RADIUS TO PROVIDE A SMOOTH TRANSITION BETWEEN THE SLOPES.

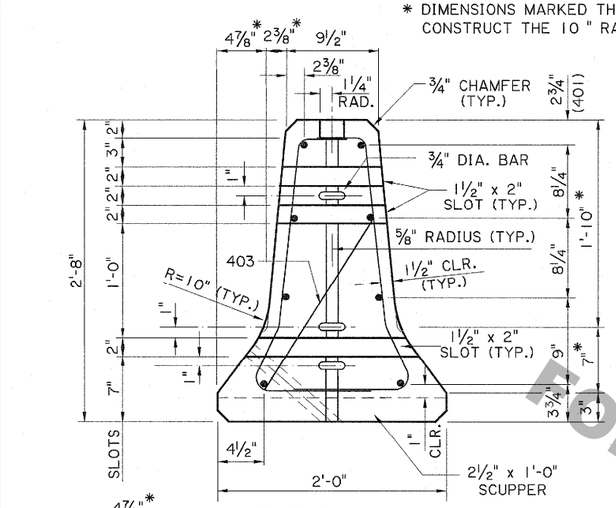

SECTION A-A

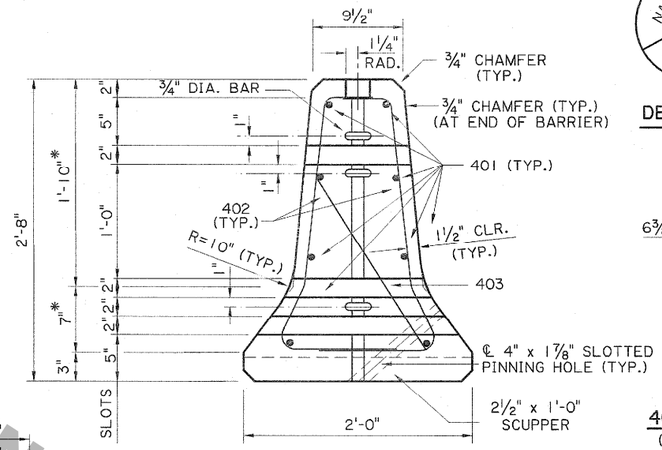

SECTION B-B

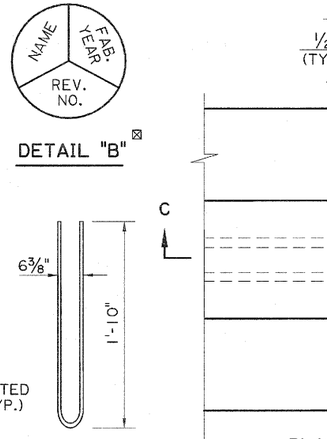

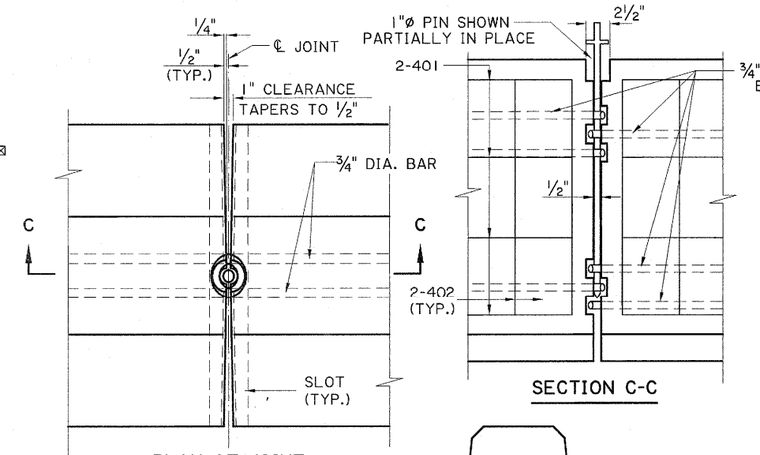

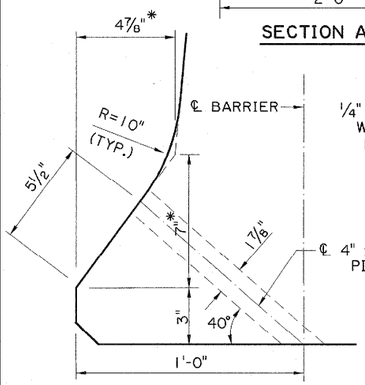

DETAIL SHOWING 10" RADIUS

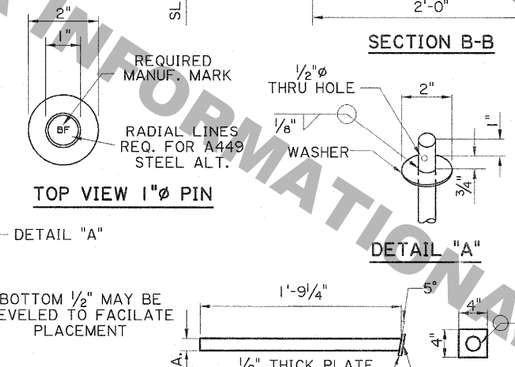

TOP VIEW 1"ø PIN

1"ø PIN DETAIL

(TO BE INSERTED BETWEEN BARRIERS)

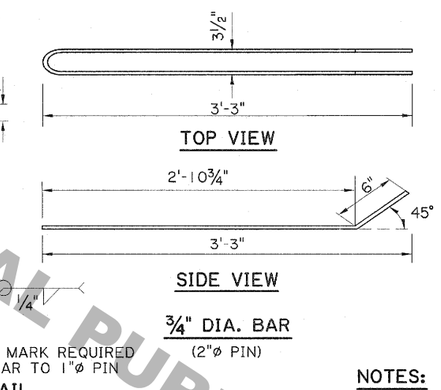

¾" DIA. BAR

(2"ø PIN)

1½"ø STEEL PIN DETAIL

(TO BE USED FOR BRIDGE DECK APPLICATION)

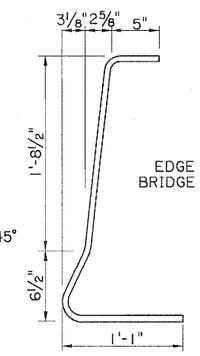

402 STIRRUPS

(2"ø PIN)

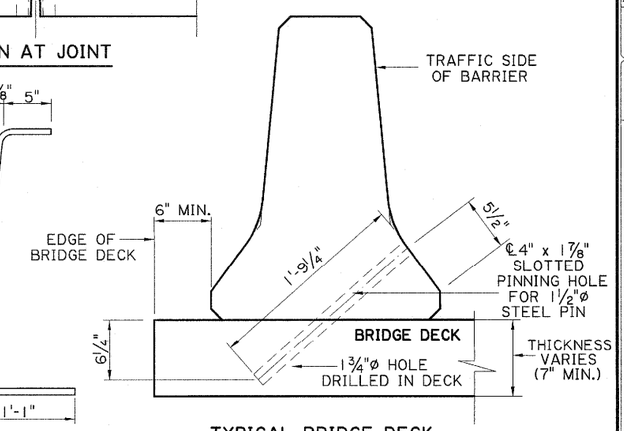

TYPICAL BRIDGE DECK PINNING DETAIL

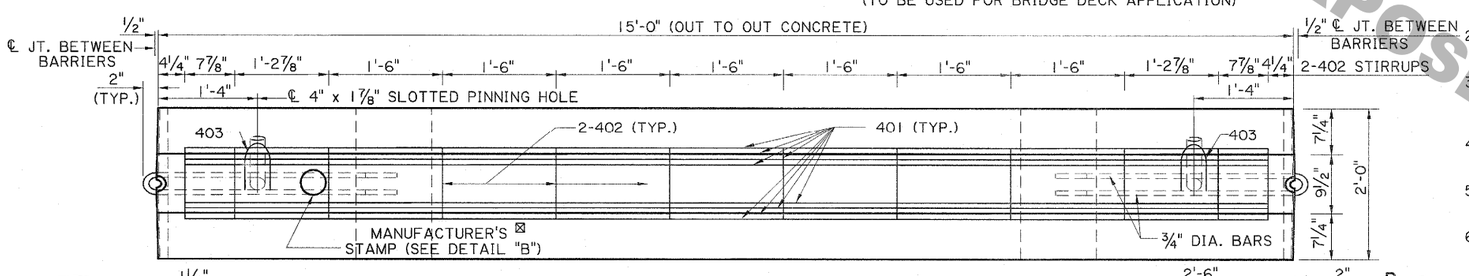

PLAN

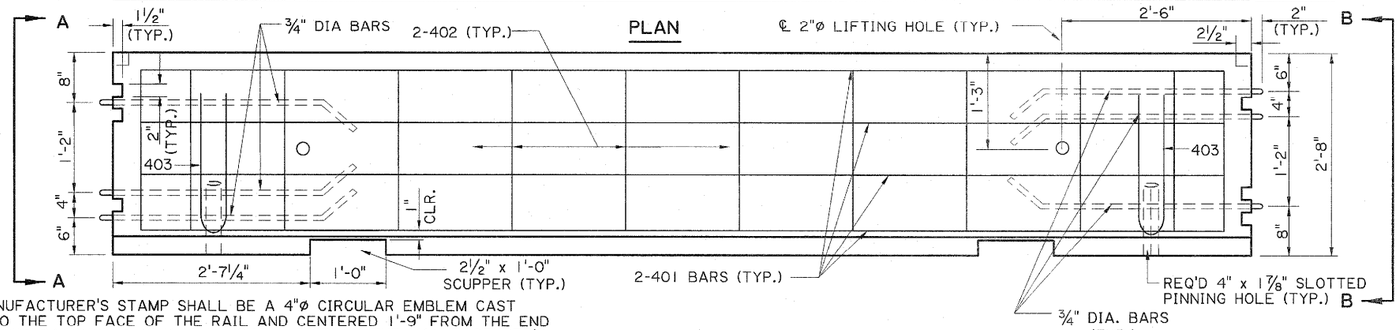

ELEVATION

⊠ MANUFACTURER'S STAMP SHALL BE A 4"ø CIRCULAR EMBLEM CAST INTO THE TOP FACE OF THE RAIL AND CENTERED 1'-9" FROM THE END OF THE BARRIER. THIS EMBLEM SHALL DISPLAY THE MANUFACTURER'S NAME, LOGO, OR INITIALS, ALONG WITH THE YEAR IN WHICH THE BARRIER WAS FABRICATED (EX. 08) AND THE NUMBER OF THE LATEST REVISION SHOWN ON THIS DETAIL (EX. R0, R1, ETC.).

NOTES:

1. 1"ø PIN SHALL CONFORM TO ASTM A193 GR B7 OR ASTM A449. 1½"ø PIN AND ¾" DIA. BAR SHALL CONFORM TO ASTM A36.
2. ALL REINFORCING STEEL SHALL HAVE A YIELD STRENGTH, fy=60 ksi. ALL REINFORCING STEEL SHALL BE 2" CLEAR FROM FACE OF CONCRETE, UNLESS OTHERWISE NOTED.
3. CONCRETE BARRIER SHALL BE CLASS "AA(M)". ALL PRECAST BARRIER UNITS SHALL BE HELD AT THE PLANT A MINIMUM OF 10 DAYS AFTER CASTING. 4" x 1⅞" SLOTTED PINNING HOLES ARE REQUIRED AS SHOWN FOR ALL BARRIER UNITS THAT ARE FABRICATED.
4. UPON COMPLETION OF PROJECT, THE CONTRACTOR SHALL REMOVE AND TRANSPORT THE BARRIER UNITS AS DIRECTED BY THE PROJECT ENGINEER.
5. GALVANIZING: 1"ø & 1½"ø PIN AND ¾" DIA. BAR SHALL BE GALVANIZED IN ACCORDANCE WITH ASTM A-123.
6. BRIDGE DECK PINNING: WHEN REQUIRED, THE BARRIER PINNING HOLES PROVIDE A METHOD OF LATERALLY RESTRAINING THE BARRIER. EACH BARRIER SHALL REQUIRE TWO HOLES DRILLED INTO THE BRIDGE DECK AS DETAILED, SO THAT TWO PINS MAY BE PLACED INTO THE BARRIER HOLES AND INTO THE DECK. UPON BARRIER REMOVAL, THE DECK HOLES SHALL BE REPAIRED WITH NON-SHRINK GROUT AS DIRECTED BY THE ENGINEER.
7. PAYMENT: QUANTITIES SHOWN ARE FOR ESTIMATION PURPOSES ONLY. CLASS "AA(M)" CONCRETE, REINFORCING STEEL, STEEL BARS, PINS, WASHERS, DRILLING & GROUTING FOR BRIDGE DECK PINS, AND GALVANIZING ARE TO BE INCLUDED IN THE PRICE FOR "TEMPORARY PRECAST CONCRETE BARRIER".
8. THESE DETAILS HAVE BEEN SUCCESSFULLY CRASH TESTED AS AN NCHRP TEST LEVEL 3 BARRIER AND SHALL BE USED IN WORK ZONES PARALLEL TO THE DIRECTION OF TRAFFIC.

ESTIMATED QUANTITIES-ONE (1) 15'-0" PRECAST BARRIER				
BAR	NO.	UNIT LENGTH	TOTAL LENGTH	LOCATION
401	8	14'-4"	114'-8"	LONGITUDINAL
402	24	3'-9"	90'-0"	STIRRUPS
403	2	3'-11⅝"	7'-11¼"	PINNING HOLE
TOTAL NO. 4 BARS = 212'-7¼" = 142 LBS.				
DEFORMED REINFORCING STEEL=142 LBS.				
6-¾" DIA. BAR (A 36 STEEL) = 41'-9" = 63 LBS.				
CLASS "AA(M)" CONCRETE= 1.76 CU. YDS.				
BARRIER WEIGHT= 7,136 LBS.				

STATE OF LOUISIANA
KURT M. BRAUNER
License No. 30567
PROFESSIONAL ENGINEER
IN
CIVIL ENGINEERING

Kurt M. Brauner
7/30/2008

FOR INFORMATIONAL PURPOSES ONLY

SHEET NUMBER

PARISH | FEDERAL PROJECT | STATE PROJECT

DESIGNED K. BRAUNER
CHECKED P. FOSSIER
DETAILED G. GRASS
CHECKED K. BRAUNER
DATE JULY 2008
SHEET

NO. | DATE | REVISION DESCRIPTION | BY

TEMPORARY PRECAST BARRIER
F SHAPE

SPECIAL DETAIL | TEMPORARY PRECAST BARRIER

STATE OF LOUISIANA DEPARTMENT OF TRANSPORTATION AND DEVELOPMENT
otp
BRIDGE AND STRUCTURAL DESIGN