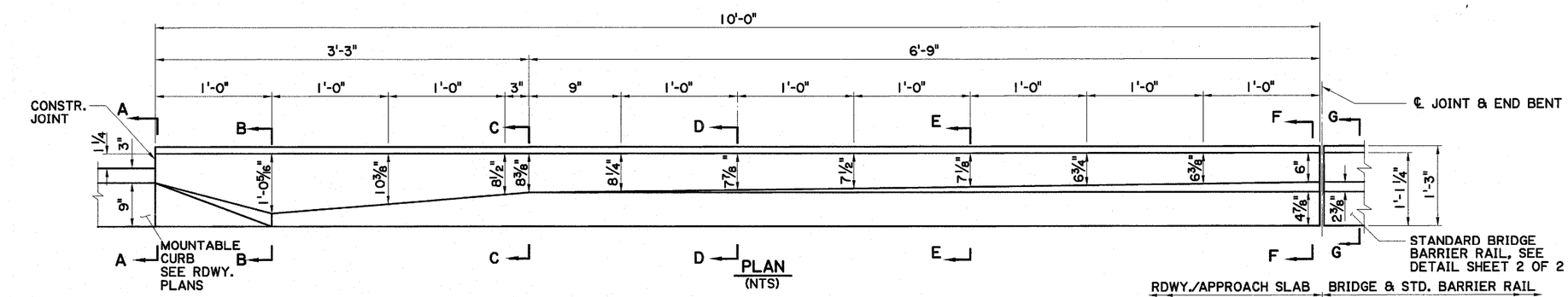

PLAN
(NTS)

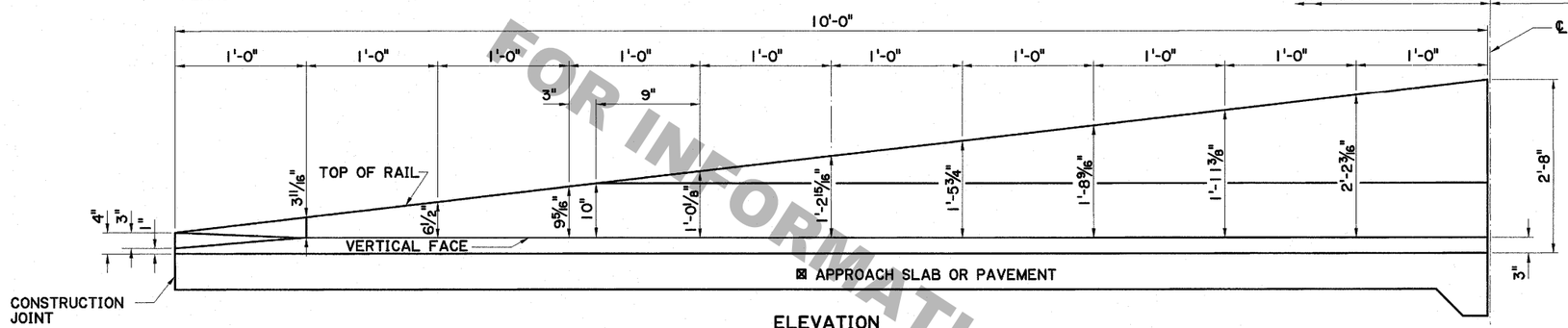

ELEVATION
(NTS)

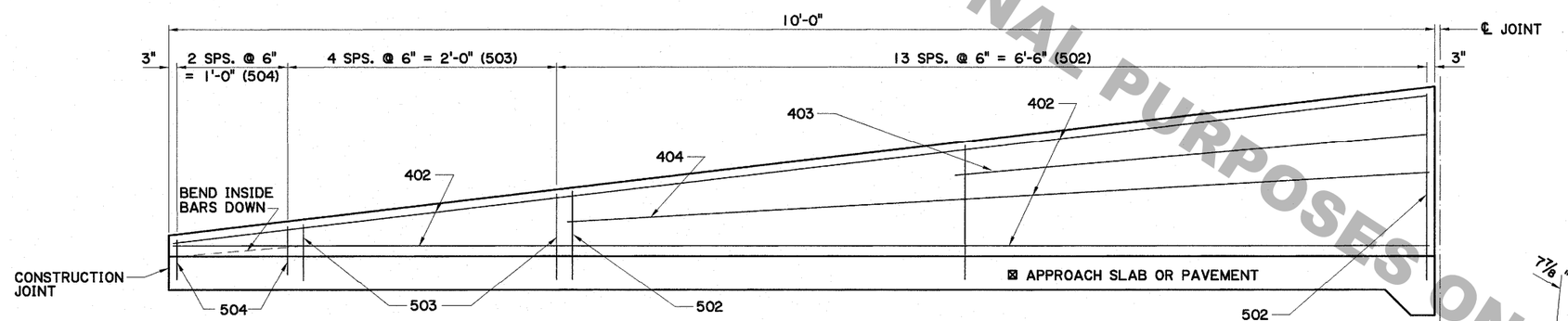

BARRIER RAIL TRANSITION ELEVATION AT APPROACH SLAB
(SHOWING REINFORCING STEEL)
(NTS)

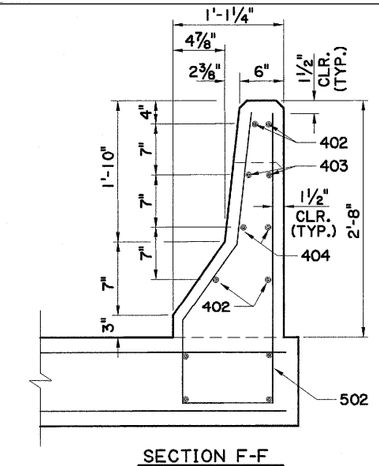

SECTION F-F

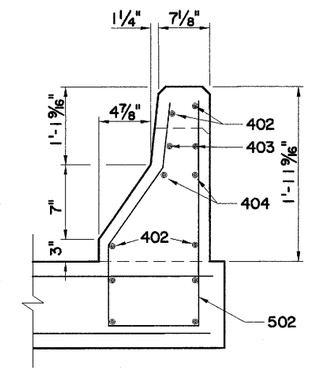

SECTION E-E

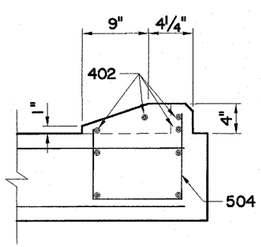

SECTION A-A

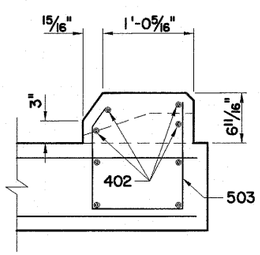

SECTION B-B

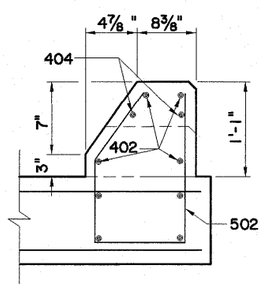

SECTION C-C

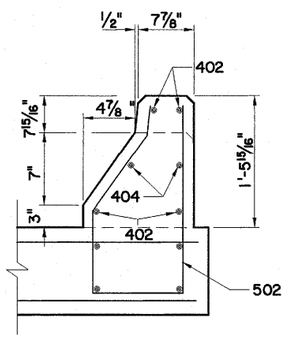

SECTION D-D

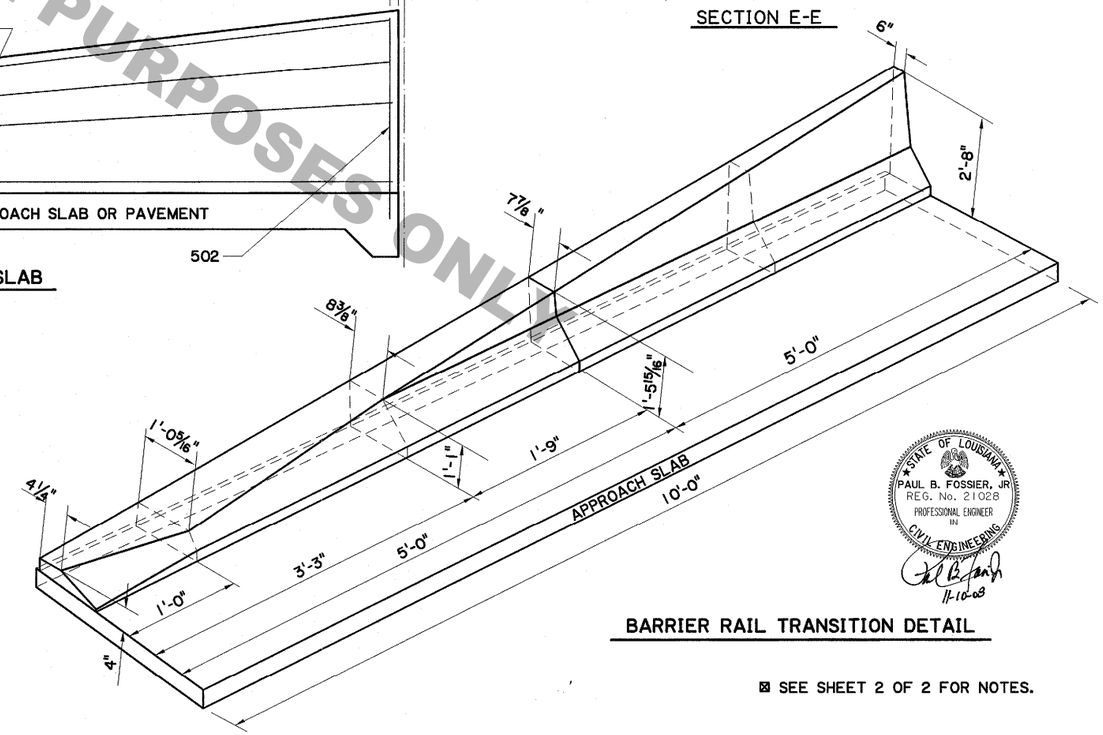

BARRIER RAIL TRANSITION DETAIL

STATE OF LOUISIANA
PAUL B. FOSSIER, JR
REG. No. 21028
PROFESSIONAL ENGINEER
IN
CIVIL ENGINEERING
11-10-08

⊠ SEE SHEET 2 OF 2 FOR NOTES.

FOR INFORMATIONAL PURPOSES ONLY

SHEET NUMBER	
PARISH	
FEDERAL PROJECT	
STATE PROJECT	
DESIGNED	P. FOSSIER
CHECKED	
DETAILED	G. GRASS
CHECKED	P. FOSSIER
DATE	OCT. 2008
SHEET	1 OF 2

NO. DATE REVISION DESCRIPTION BY

STATE OF LOUISIANA

CONCRETE BARRIER RAILING & TRANSITION AT APPROACH SLAB (CAST-IN-PLACE)

BR-05

DOTD DEPARTMENT OF TRANSPORTATION AND DEVELOPMENT

BRIDGE AND STRUCTURAL DESIGN