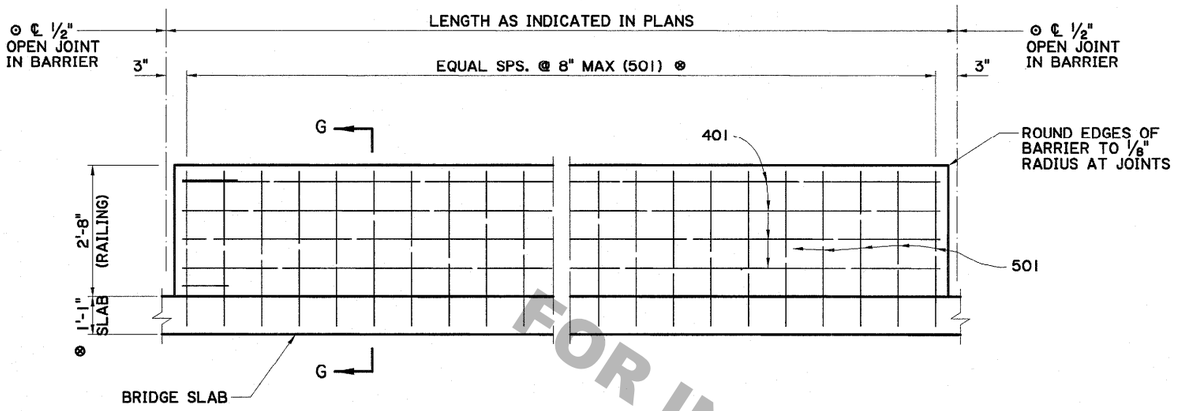

STANDARD BRIDGE BARRIER RAILING ELEVATION

(SHOWING BARRIER RAILING ALONG BRIDGE SLAB)

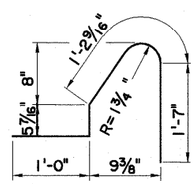

402
(2" ø PIN)

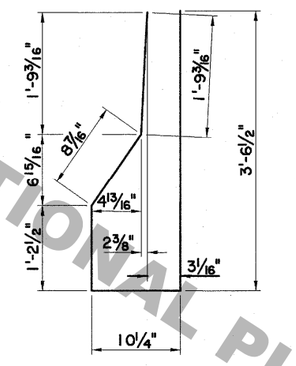

501 ⊗
(2 1/2" ø PIN)

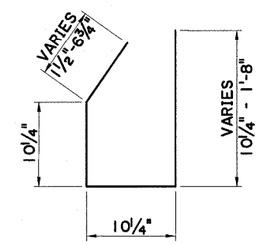

503 ⊠
(2 1/2" ø PIN)

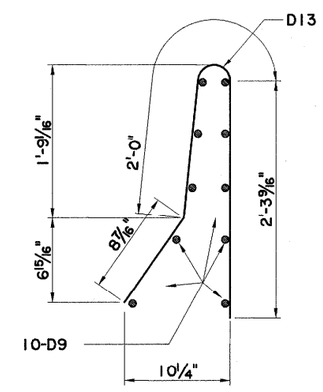

WWF DETAIL ⊕
(WWF VAR.x6 - D9xD13)
(2 1/2" ø PIN)

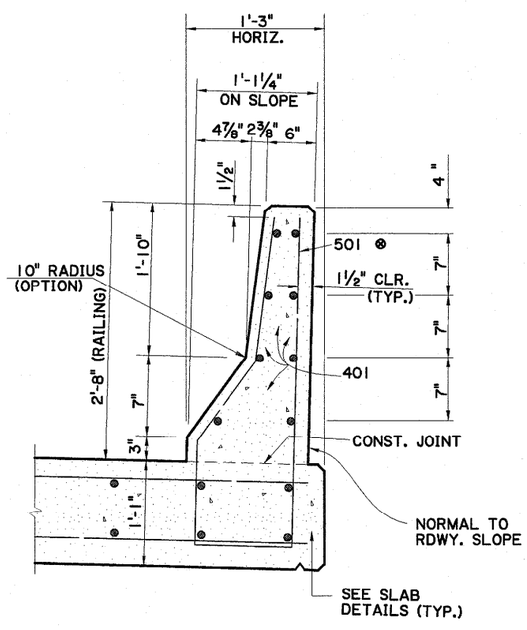

SECTION G-G

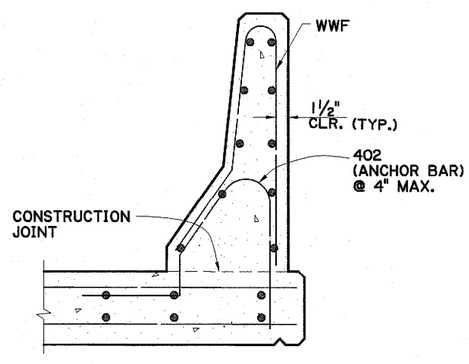

OPTIONAL BRIDGE RAIL SECTION

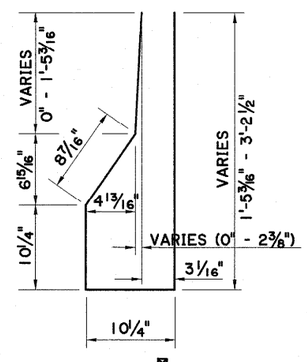

502 ⊠
(2 1/2" ø PIN)

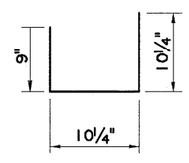

504 ⊠
(2 1/2" ø PIN)

NOTES:

1) STANDARD DETAIL BR-05 CONCRETE BARRIER DETAILS SHALL BE USED ONLY WHEN THE STANDARD GUARD RAIL DETAILS CANNOT BE USED DUE TO SPECIAL SITE CONDITIONS.

2) ALL CONCRETE AND STEEL IN BARRIER RAILING AND BARRIER TRANSITION INCLUDING BARS THAT PROJECT FROM THE DECK INTO THE RAILING TO BE PAID FOR UNDER ITEM 810-01-00100, CONCRETE RAILING (STANDARD BARRIER) PER LINEAR FOOT.

3) WHEN EPOXY COATED REBARS ARE REQUIRED IN THE CONCRETE DECK, LONGITUDINAL BARS AND STIRRUPS IN THE BARRIER RAIL FACE (ROADWAY SIDE) SHALL HAVE THE SAME PROTECTION.

4) ALL BARRIER RAIL SURFACES ARE TO RECEIVE A CLASS 2A SPECIAL SURFACE FINISH.

⊠ 5) REBAR DIMENSIONS SHOWN FOR NO. 502, 503 & 504 BARS ARE BASED ON A 10" THICK APPROACH SLAB. ADJUSTMENTS TO REBAR DIMENSIONS MUST BE MADE FOR APPROACH SLAB OR CONCRETE PAVEMENTS WITH OTHER VALUES WITH APPROVAL FROM THE ENGINEER.

⊕ 6) WWF SHALL CONFORM TO ASTM A496 AND 497. WWF LAP SPLICE TO BE 1'-0" MINIMUM.

⊗ 7) AT THE CONTRACTORS OPTION, NO. 4 BARS AT 5" CENTERS MAY BE SUBSTITUTED IN LIEU OF NO. 501 BARS AT 8" CENTERS. USE 2" ø PIN FOR BENDING. REINFORCING STEEL DIMENSIONS SHOWN FOR NO. 501 & 402 BARS ARE BASED ON 1'-1" CAST-IN-PLACE BRIDGE SLAB UNDER BARRIER; ADJUSTMENTS TO REBAR DIMENSIONS MUST BE MADE FOR DECKS WITH OTHER VALUES WITH APPROVAL FROM THE ENGINEER.

⊙ 8) SAW CUTTING OF THE 1/2" OPEN JOINT IS PERMITTED PROVIDED 1 1/2" MINIMUM CLEARANCE IS MAINTAINED FOR REINFORCING STEEL AND SUBJECTED TO APPROVAL OF THE ENGINEER.

STATE OF LOUISIANA
PAUL B. FOSSIER, JR
REG. No. 21028
PROFESSIONAL ENGINEER IN CIVIL ENGINEERING
11-14-08

FOR INFORMATIONAL PURPOSES ONLY

SHEET NUMBER	
PARISH	
FEDERAL PROJECT	
STATE PROJECT	
DESIGNED P. FOSSIER	
CHECKED	
DETAILED G. GRASS	
CHECKED P. FOSSIER	
DATE OCT.,2008	
SHEET 2 OF 2	
NO.	DATE
REVISION DESCRIPTION	BY

CONCRETE BARRIER RAILING & TRANSITION AT APPROACH SLAB (CAST-IN-PLACE)

BR-05

BRIDGE AND STRUCTURAL DESIGN