CHECK PRINTS
01-NOV-2011 08:29
IP_PWP:dms55699\Overhead Traffic Signs 04.dgn

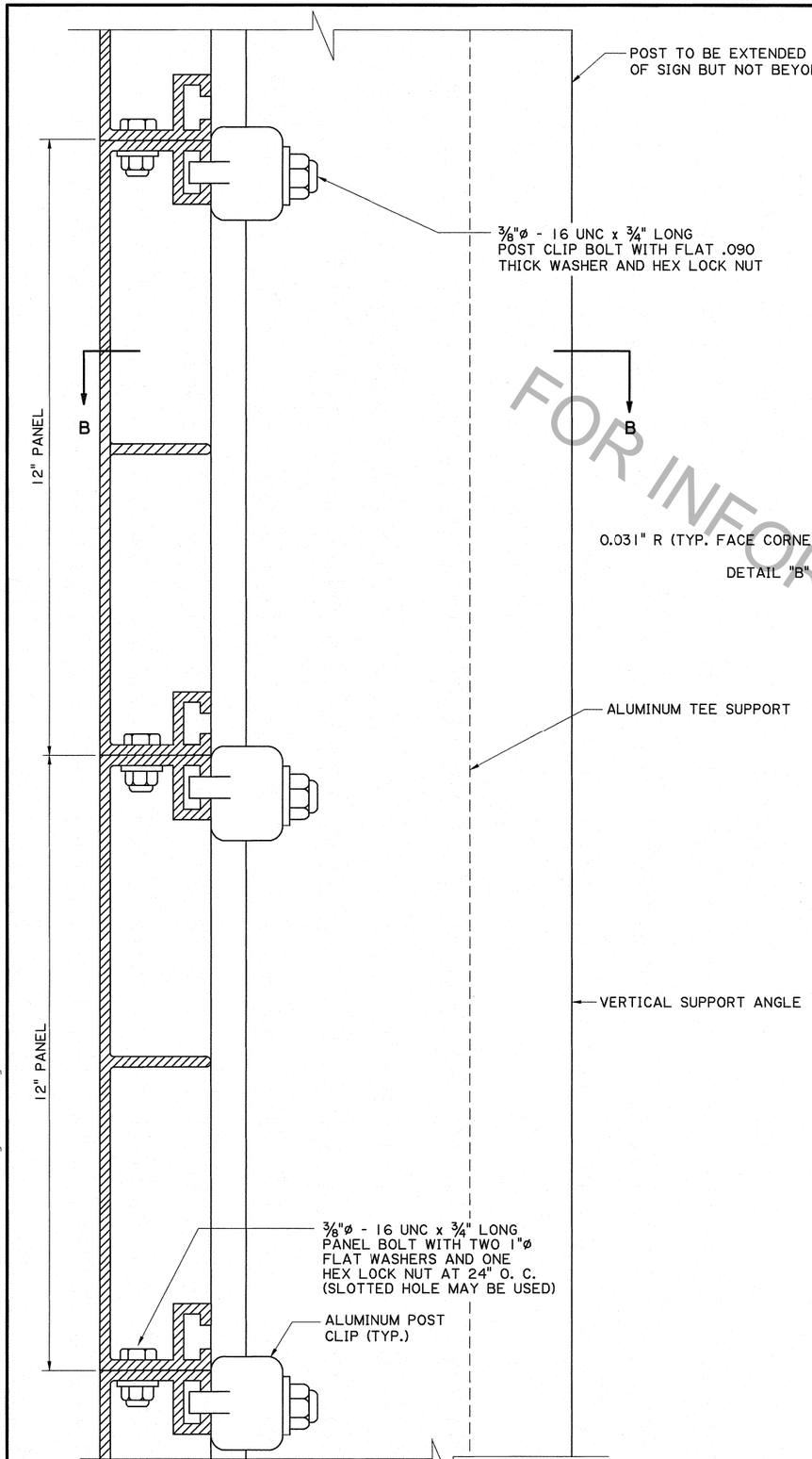

SECTION A-A

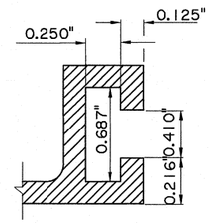

DETAIL "A"

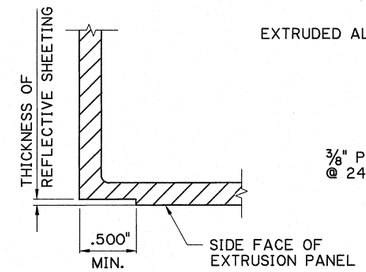

DETAIL "B"

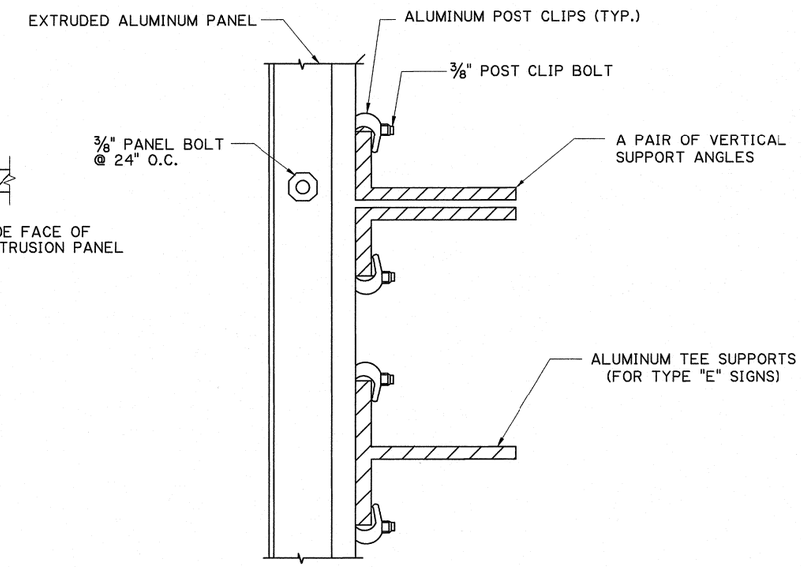

SECTION B-B

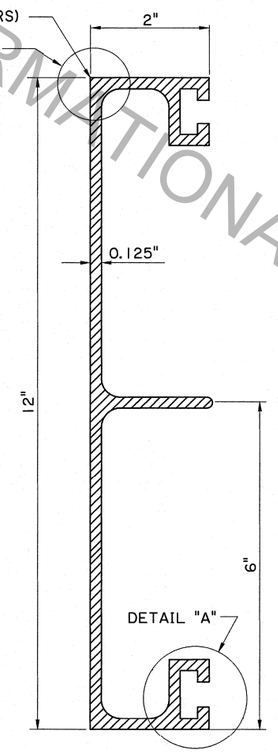

12" PANEL

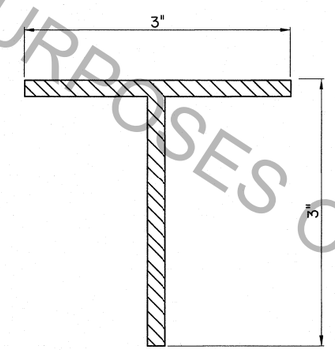

3"x3"x3/8"

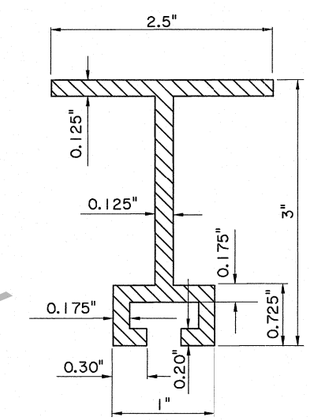

3"x2.5"

ALUMINUM TEE SUPPORTS
(FOR TYPE "E" SIGNS)

MINIMUM WALL THICKNESS IS 0.080" UNLESS OTHERWISE SPECIFIED

FOR INFORMATIONAL PURPOSES ONLY

STATE OF LOUISIANA
KURT M. BRAUNER
License No. 30567
PROFESSIONAL ENGINEER IN CIVIL ENGINEERING
8/29/11

SHEET NUMBER	
PARISH	
FEDERAL PROJECT	
STATE PROJECT	
DESIGNED K. BRAUNER	
CHECKED P. FOSSIER	
DETAILED I.KORILOVA	
CHECKED K. BRAUNER	
DATE JAN. 2011	
SHEET 4 OF 16	

NO.	DATE	REVISION DESCRIPTION	BY

STATE OF LOUISIANA DEPARTMENT OF TRANSPORTATION AND DEVELOPMENT

EXTRUDED ALUMINUM PANELS

BD.2.7.1.0.4 - OVERHEAD TRAFFIC SIGNS

BRIDGE AND STRUCTURAL DESIGN