CHECK PRINTS
01-NOV-2011 10:55
IP_PWP:dms55699\Roadside Traffic Signs 05.dgn

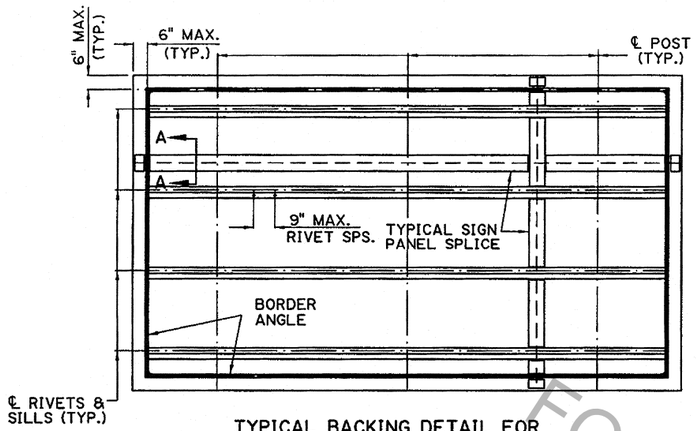


TYPICAL BACKING DETAIL FOR MULTIPLE POST MOUNTS

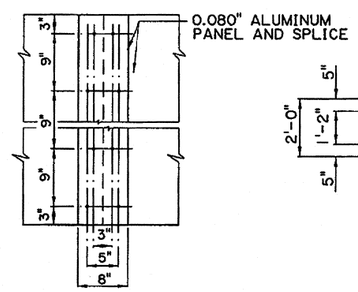


TYPICAL SIGN PANEL SPLICE

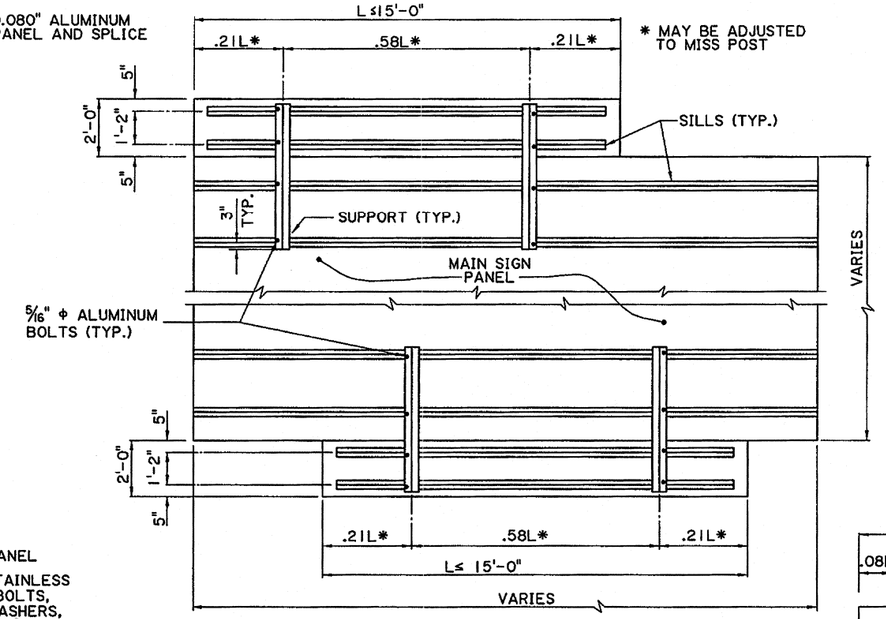


TYPE E SIGN MOUNTING DETAIL

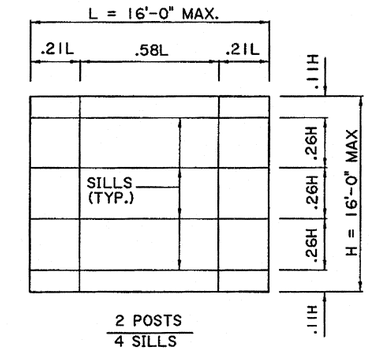


2 POSTS
4 SILLS

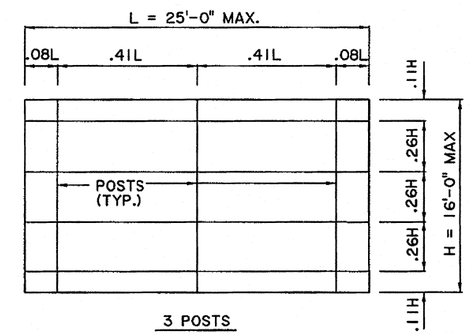


3 POSTS
4 SILLS

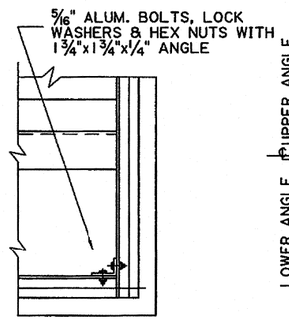


BORDER ANGLE AND SILL CONNECTION

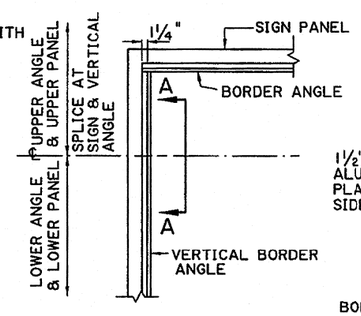


PERMISSABLE BORDER ANGLE SPLICE

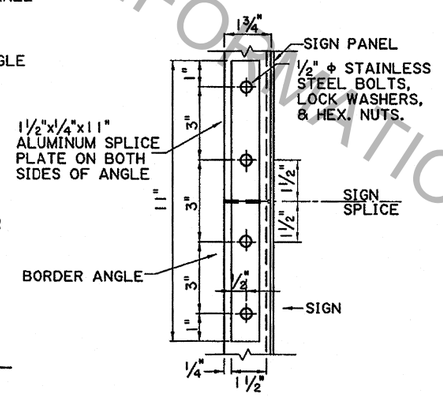


SECTION A-A

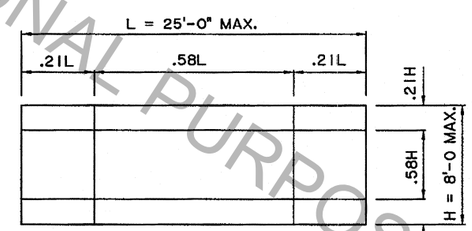


2 POSTS
2 SILLS

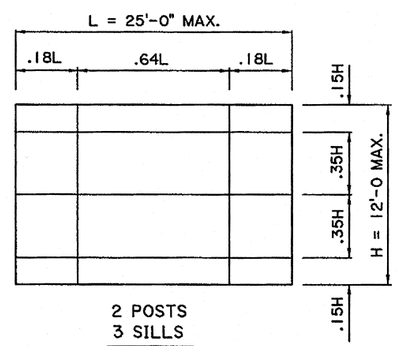


2 POSTS
3 SILLS

SPACING OF POSTS AND SILLS FOR GROUND MOUNTED SIGN INSTALLATIONS

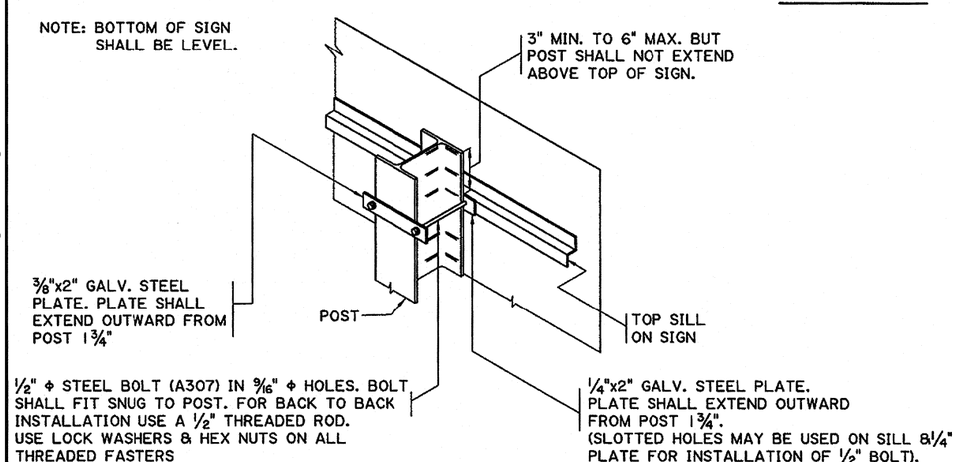


ISOMETRIC VIEW SHOWING METHOD OF ATTACHING SIGN PANEL TO W POST. TYPICAL FOR EACH SILL

(TYPE D OR E SIGN)

**NOTES:**

MINIMUM PANEL WIDTH SHALL BE 1'-6".

RECTANGULAR SIGNS WITH VERTICAL BLANK DIMENSIONS 5'-6" OR GREATER SHALL HAVE BORDER ANGLES.

BORDER ANGLES SHALL BE ≤ 1¾"x1¼"x3/16" ALUMINUM. BORDER ANGLES SHALL BE PLACED AS CLOSE TO THE EDGE OF THE PANEL AS PRACTICAL WITH THE LONGER LEG EXTENDED OUTWARD FROM THE PANEL.

SILLS AND SUPPORTS SHALL BE "Z" 3"x2 11/16"x¼" ALUMINUM.

RIVETS SHALL HAVE A 0'-9" MAXIMUM PITCH AND PLACED 0'-1" FROM THE ENDS OF SILLS AND BORDER ANGLES. SPLICE PLATES SHALL NOT EXTEND UNDER PANEL BACKING MEMBERS. THESE PANEL BACKING MEMBERS SHALL NOT BE CUT WITHIN 0'-9" OF THE PANEL SPLICE.

THIS SHEET TO BE USED WITH GENERAL NOTES AND WIND LOAD MAP SHEET.

STATE OF LOUISIANA
PAUL B. FOSSIER, JR.
REG. No. 21028
REGISTERED PROFESSIONAL ENGINEER
IN CIVIL ENGINEERING
8/31/00

FOR INFORMATIONAL PURPOSES ONLY

| | |
|---|---|
| SHEET NUMBER | |
| PARISH | |
| FEDERAL PROJECT | |
| STATE PROJECT | |
| DESIGNED | J.C. PORTER |
| CHECKED | D. HUVAL |
| DETAILED | E. DANIEL |
| CHECKED | A. BRIDGES |
| DATE | JULY 2000 |
| SHEET | 5 OF 11 |

NO. | DATE | REVISION DESCRIPTION | BY

PANEL DETAILS
TYPE D & E SIGNS
BD.2.7.2.0.5 - ROADSIDE TRAFFIC SIGNS

BRIDGE AND STRUCTURAL DESIGN