CHECK PRINTS
IP_PWP:dms55699\Roadside Traffic Signs 07.dgn 01-NOV-2011 11:01

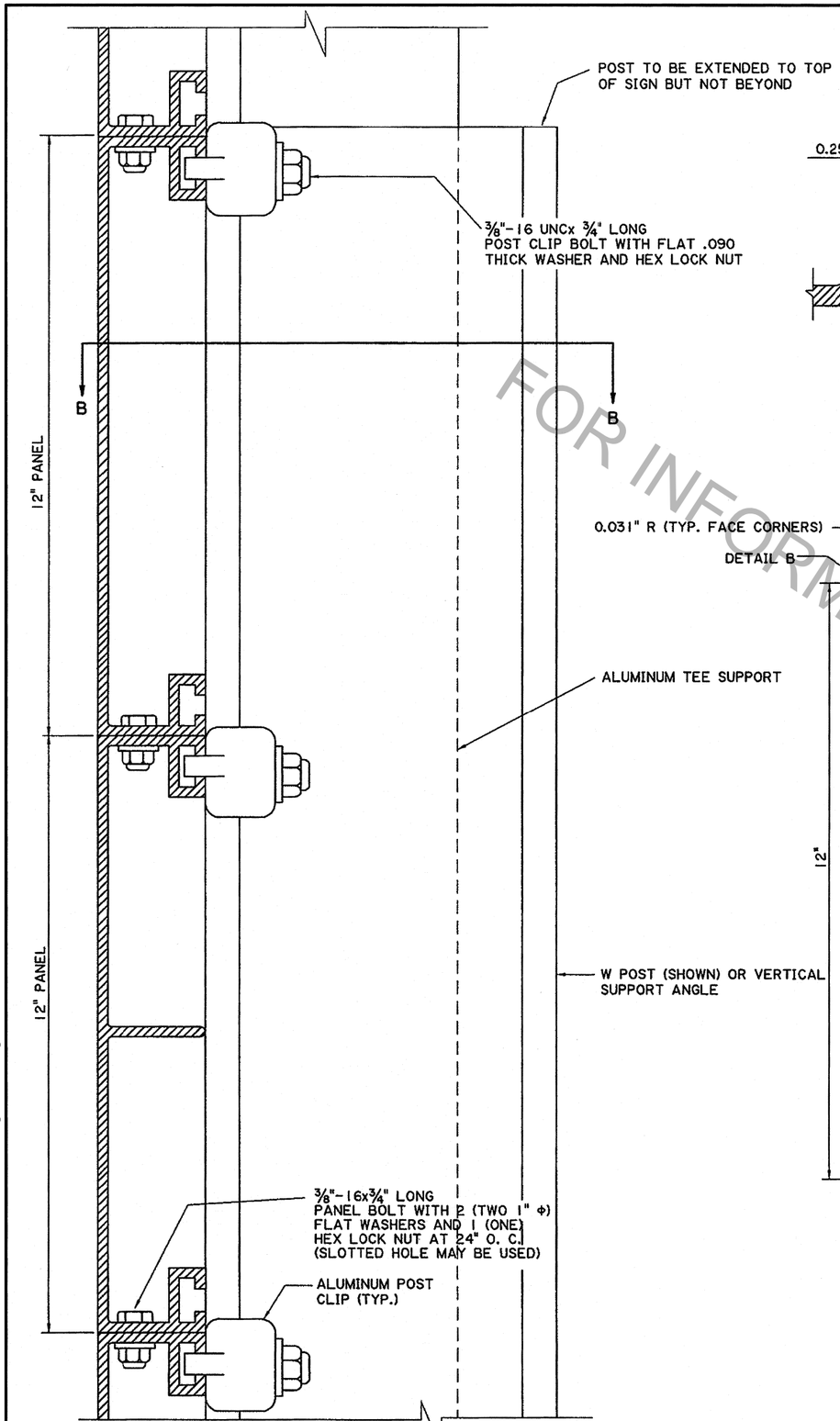

SECTION A-A

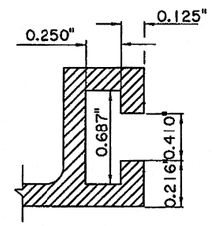

DETAIL "A"

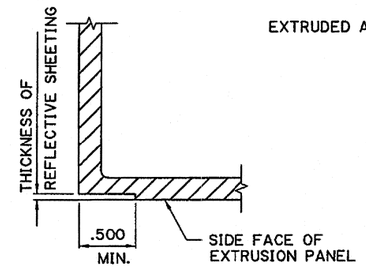

DETAIL "B"

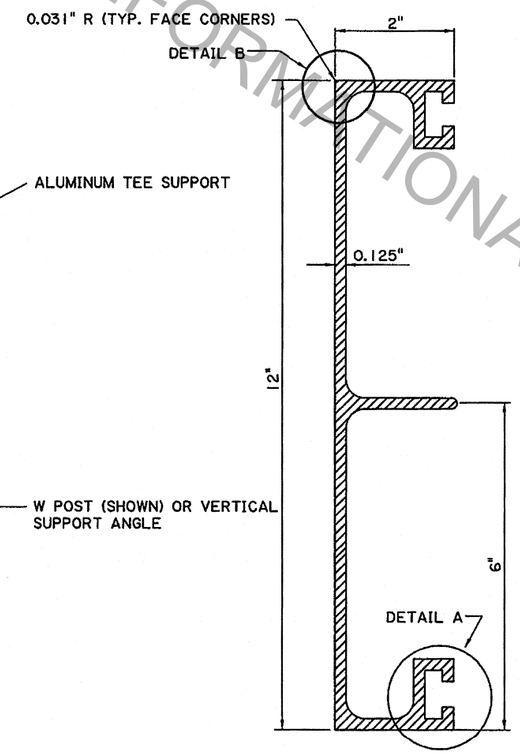

12" PANEL

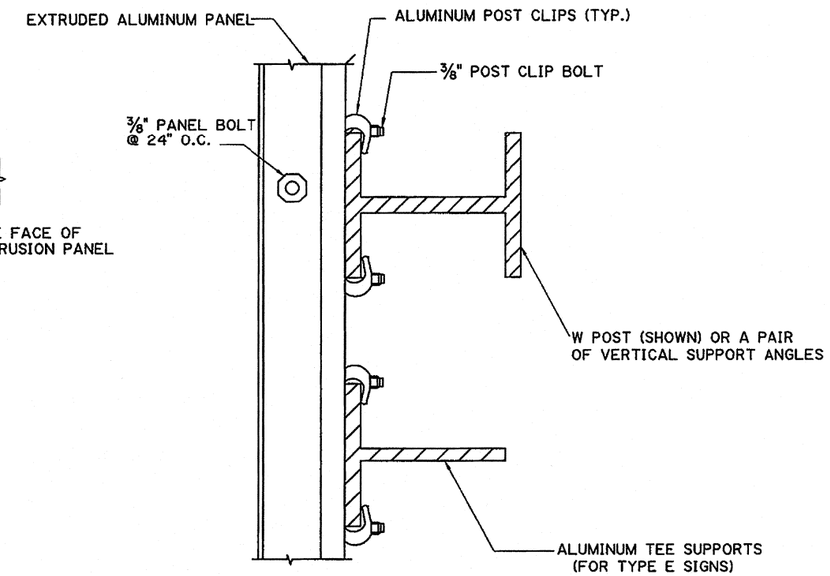

SECTION B-B

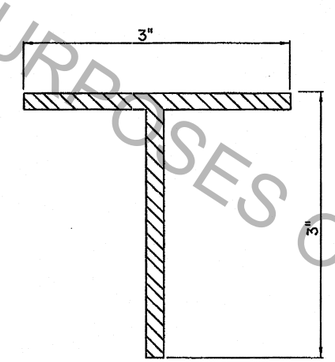

3"x3"x3/8"

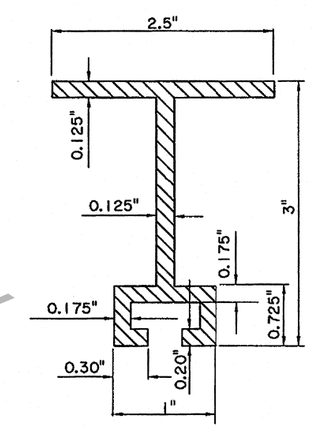

3"x2.5"

ALUMINUM TEE SUPPORTS
(FOR TYPE E SIGNS)

MINIMUM WALL THICKNESS IS 0.080" UNLESS OTHERWISE SPECIFIED

FOR INFORMATIONAL PURPOSES ONLY

STATE OF LOUISIANA
PAUL B. FOSSIER, JR.
REG. No. 21028
REGISTERED PROFESSIONAL ENGINEER IN CIVIL ENGINEERING
Paul B. Fossier, Jr.
8/31/00

SHEET NUMBER	
PARISH	
FEDERAL PROJECT	
STATE PROJECT	
DESIGNED	P. FOSSIER
CHECKED	P. FOSSIER
DETAILED	G. GRASS
CHECKED	
DATE	JULY 2000
SHEET	7 OF 11

NO.	DATE	REVISION DESCRIPTION	BY

STATE OF LOUISIANA

EXTRUDED ALUMINUM PANEL

TYPE D & E SIGNS

BD.2.7.2.0.7 - ROADSIDE TRAFFIC SIGNS

DEPARTMENT OF TRANSPORTATION AND DEVELOPMENT DOTD

BRIDGE AND STRUCTURAL DESIGN