11:04 01-NOV-2011

CHECK PRINTS

FOR INFORMATIONAL PURPOSES ONLY

TYPE A SIGN

RECTANGULAR SHAPES:
4'-0" MAX. HORIZ. DIM.
DIAMOND SHAPES:
5'-0" MAX. EDGE DIM.
OTHER SHAPES:
5'-0" MAX. HORIZ. DIM.

TYPE B SIGN

CLUSTER ASSEMBLY
MAX. DIM. FOR DIFFERENT SIGN BLANK SHAPES ON SINGLE POST SIGNS.
DIAMOND: 5'-0"x5'-0"
TRIANGLE: 5'-0"x5'-0"x5'-0"
OTHERS: 5'-0" MAX. HORIZ. DIM.

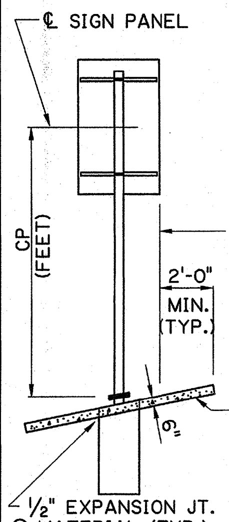

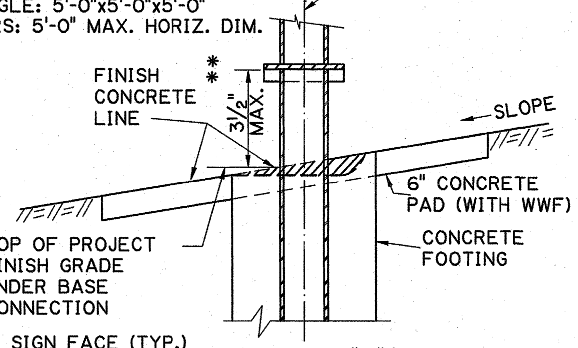

DETAIL "A"

✱✱ TO MAINTAIN CORRECT STUB PROJECTION, RECESS CONCRETE AS NECESSARY FOR BOLT INSTALLATION. RECESS SHAPE TO DRAIN.

ROUND OR RECTANGULAR CONCRETE SLAB (4' WIDTH) COST TO BE INCLUDED IN BID PRICE FOR SIGN POST. (WITH WWF)

⊗ JOINT MATERIAL IS NOT REQUIRED IF SLAB AND FOOTING ARE POURED MONOLITHIC.

REAR ELEVATION OF SINGLE POST MOUNTING

SINGLE POST MOUNTS

CP	TOTAL SQ. FT. SIGN AREA													
	ALUMINUM ALTERNATE													
	ZONE I							ZONE II						
	5	10	15	20	25	30	35	5	10	15	20	25	30	35
7	5	5	6	6	7	7	7	5	6	6	7	7	7	7
8		5		6						6				
9		6		6						6				
10				7						7				
11														
12			6					5						7
13			7					6	6					8
14									7				7	
15									7				8	
16	5	6	7	7	7	7	7	6	7	7	7	7	8	8
	STEEL ALTERNATE													
	ZONE I							ZONE II						
7	1	1	1	2	2	2	3	1	1	2	2	3	3	3
8			2			2			1					
9						3			2					
10					2						2			
11		1			3						3			
12	1	2						1						
13	2			2				2						3
14				3						2				4
15				3						3				4
16	2	2	2	3	3	3	3	2	2	3	3	3	3	4

NOTES:

W POST SECTIONS AND TABLE:
COLUMNS HEADED BY THE NUMBERS 42, 34, 27 AND 20 REPRESENT THE DESIGN WIND PRESSURE IN POUNDS PER SQUARE FOOT.
SEE ACCOMPANYING LOUISIANA WIND MAP TO DETERMINE THE DESIGN WIND PRESURE.
L - LENGTH OF SIGN PANEL DESIGNED.
H - HEIGHT OF SIGN PANEL DESIGNED.
ALL DIMENSIONS ARE IN INCREMENTS OF EVEN FEET.

THIS SHEET TO BE USED WITH WIND LOAD MAP AND GENERAL NOTE SHEET.

CONCRETE SLAB TO BE REINFORCED WITH A.S.T.M. A-185 WWF 4x4-W4.0 x W4.0 AND FINISHED IN ACCORDANCE WITH LA. STD. SPECS. 805.13(e).

✡ 30' FREEWAYS AND EXPRESSWAYS. 15' NORMAL FOR CONVENTIONAL, FRONTAGE ROADS & INTERSTATE RAMPS. THE MINIMUM CLEARANCE OUTSIDE THE USABLE ROADWAY SHOULDER, RIGHT OR LEFT SIDE OF THE ROADWAY SHALL BE 2'-0". FOR THE REQUIRED OFFSET AND MOUNTING HEIGHTS SEE SIGN SUMMARY SHEETS.

△ FOR DOUBLE POST SIGN MOUNTINGS WITH A MAX. SIGN AREA OF 20 SQ. FT. AND CP=12 FT., S3x5.7 STEEL POST SECTION SHOULD BE USED.

⊠ 6' MINIMUM FOR ROUTE MARKERS, WARNING AND REGULATORY SIGNS.

⊠ 8' MINIMUM FOR GUIDE SIGNS WHEN SECONDARY SIGN MOUNTED BELOW.

⊙ UNLESS OTHERWISE NOTED ON THE SIGN SUMMARY SHEET.

⊕ TO BE USED ON NON-BREAKWAY SUPPORTS ONLY.

SINGLE POST PIPE & TUBE SECTIONS AND INDEX NUMBERS

NO.	ALUMINUM	NO.	STEEL	
5	3"øx3/16" WALL	1	2 1/2" ø SCHED. 40	
6	4"øx3/16" WALL	2	3 1/2" ø SCHED. 40	
7	6"øx1/4" WALL	3	5" ø SCHED. 40	⊕
8	8"øx1/4" WALL	4	6" ø SCHED. 40	⊕

W POST SECTIONS FOR DOUBLE & TRIPLE POST MOUNTINGS

PL L	PL H	ALUM. 42	ALUM. 34	ALUM. 27	ALUM. 20	STEEL 42	STEEL 34	STEEL 27	STEEL 20
5	1	7	7	7	7	1	1	1	1
5	2	7	7	7	7	1	1	1	1
5	3	7	7	7	7	1	1	1	1
5	4	7	7	7	7	1	1	1	1
5	5	7	7	7	7	1	1	1	1
5	6	8	7	7	7	1	1	1	1
6	1	7	7	7	7	1	1	1	1
6	2	7	7	7	7	1	1	1	1
6	3	7	7	7	7	1	1	1	1
6	4	7	7	7	7	1	1	1	1
6	5	8	7	7	7	1	1	1	1
6	6	8	8	7	7	1	1	1	1
6	7	8	8	8	7	2	1	1	1
7	2	7	7	7	7	1	1	1	1
7	3	7	7	7	7	1	1	1	1
7	4	8	7	7	7	1	1	1	1
7	5	8	8	7	7	1	1	1	1
7	6	8	8	8	7	2	1	1	1
7	7	8	8	8	8	2	2	1	1
7	8	9	8	8	8	2	2	1	1
8	2	7	7	7	7	1	1	1	1
8	3	7	7	7	7	1	1	1	1
8	4	8	7	7	7	1	1	1	1
8	5	8	8	7	7	2	1	1	1
8	6	8	8	8	7	2	2	1	1
8	7	8	8	8	8	2	2	1	1
8	8	9	8	8	8	2	2	2	1
8	9	9	9	8	8	2	2	2	1
9	2	7	7	7	7	1	1	1	1
9	3	7	7	7	7	1	1	1	1
9	4	8	8	7	7	1	1	1	1
9	5	8	8	8	7	2	1	1	1
9	6	8	8	8	8	2	2	1	1
9	7	9	8	8	8	2	2	2	1
9	8	9	9	8	8	2	2	2	1
9	9	9	9	8	8	2	2	2	2
9	10	9	9	9	8	2	2	2	2
10	2	7	7	7	7	1	1	1	1
10	3	8	7	7	7	1	1	1	1
10	4	8	8	7	7	2	1	1	1
10	5	8	8	8	7	2	2	1	1
10	6	9	8	8	8	2	2	2	1
10	7	9	9	8	8	2	2	2	1
10	8	9	9	9	8	2	2	2	2
10	9	9	9	9	8	2	2	2	2
10	10	10	9	9	8	2	2	2	2
10	11	10	9	9	9	2	2	2	2
11	2	7	7	7	7	1	1	1	1
11	3	8	8	7	7	1	1	1	1
11	4	8	8	8	7	2	1	1	1
11	5	8	8	8	8	2	2	1	1
11	6	9	8	8	8	2	2	2	1
11	7	9	9	8	8	2	2	2	2
11	8	9	9	9	8	2	2	2	2
11	9	10	9	9	8	3	2	2	2
11	10	10	9	9	9	3	3	2	2
11	11	10	10	9	9	3	3	3	2
11	12	10	10	9	9	4	3	3	2
12	3	8	8	7	7	2	1	1	1
12	4	8	8	8	7	2	2	1	1

PL L	PL H	ALUM. 42	ALUM. 34	ALUM. 27	ALUM. 20	STEEL 42	STEEL 34	STEEL 27	STEEL 20
12	5	9	8	8	8	2	2	2	1
12	6	9	9	8	8	2	2	2	2
12	7	9	9	9	8	3	2	2	2
12	8	10	9	9	8	3	2	2	2
12	9	10	9	9	9	3	3	2	2
12	10	10	10	9	9	3	3	2	2
12	11	10	10	9	9	4	3	3	2
12	12	10	10	10	9	4	3	3	2
12	13	11	10	10	9	4	4	3	3
13	3	8	8	8	7	2	1	1	1
13	4	8	8	8	8	2	2	1	1
13	5	9	8	8	8	2	2	2	1
13	6	9	9	8	8	2	2	2	2
13	7	9	9	9	8	3	2	2	2
13	8	10	9	9	9	3	3	2	2
13	9	10	10	9	9	3	3	2	2
13	10	10	10	9	9	4	3	3	2
13	11	10	10	10	9	4	3	3	2
13	12	11	10	10	9	4	4	3	3
13	13	11	10	10	9	4	4	3	3
13	14	11	10	10	10	4	4	4	3
14	3	8	8	8	7	2	1	1	1
14	4	9	8	8	8	2	2	2	1
14	5	9	9	8	8	2	2	2	2
14	6	9	9	9	8	3	2	2	2
14	7	10	9	9	9	3	2	2	2
14	8	10	9	9	9	3	3	2	2
14	9	10	10	9	9	3	3	3	2
14	10	10	10	9	9	4	3	3	2
14	11	10	10	10	9	4	4	3	3
14	12	11	10	10	9	4	4	3	3
14	13	11	10	10	10	4	4	4	3
14	14	11	11	10	10	4	4	4	3
14	15	11	11	10	10	5	4	4	3
15	3	8	8	8	7	2	2	1	1
15	4	9	8	8	8	2	2	2	1
15	5	9	9	8	8	2	2	2	2
15	6	9	9	9	8	3	2	2	2
15	7	10	9	9	9	3	3	2	2
15	8	10	10	9	9	3	3	3	2
15	9	10	10	9	9	4	3	3	2
15	10	10	10	10	9	4	3	3	3
15	11	11	10	10	9	4	4	3	3
15	12	11	10	10	10	4	4	3	3
15	13	11	11	10	10	4	4	4	3
15	14	11	11	10	10	5	4	4	3
15	15	12	11	11	10	5	4	4	4
15	16	12	11	11	10	5	5	4	4
16	3	8	8	8	8	2	2	1	1
16	4	9	8	8	8	2	2	2	1
16	5	9	9	9	8	3	2	2	2
16	6	10	9	9	8	3	2	2	2
16	7	10	9	9	9	3	3	2	2
16	8	10	10	9	9	4	3	3	2
16	9	10	10	10	9	4	3	3	2
16	10	11	10	10	9	4	4	3	3
16	11	11	10	10	10	4	4	3	3
16	12	11	11	10	10	4	4	4	3
16	13	11	11	10	10	5	4	4	3
16	14	12	11	11	10	5	4	4	3

PL L	PL H	ALUM. 42	ALUM. 34	ALUM. 27	ALUM. 20	STEEL 42	STEEL 34	STEEL 27	STEEL 20
16	15	12	11	11	10	5	5	4	4
16	16	12	12	11	10	5	5	4	4
17	4	9	9	8	8	2	2	2	2
17	5	9	9	9	8	3	2	2	2
17	6	10	9	9	9	3	3	2	2
17	7	10	10	9	9	3	3	3	2
17	8	10	10	9	9	4	3	3	2
17	9	10	10	10	9	4	4	3	3
17	10	11	10	10	9	4	4	3	3
17	11	11	11	10	10	4	4	4	3
17	12	11	11	10	10	5	4	4	3
17	13	11	10	10	9	4	4	3	3
17	14	11	10	10	10	4	4	3	3
17	15	11	11	10	10	4	4	4	3
17	16	11	11	10	10	5	4	4	3
18	3	9	8	8	8	2	2	2	1
18	4	9	9	8	8	2	2	2	2
18	5	9	9	9	8	3	2	2	2
18	6	10	9	9	9	3	3	2	2
18	7	10	10	9	9	4	3	3	2
18	8	10	10	10	9	4	3	3	2
18	9	11	10	10	9	4	4	3	3
18	10	11	10	10	10	4	4	3	3
18	11	11	11	10	10	4	4	4	3
18	12	12	11	10	10	5	4	4	3
18	13	11	10	10	10	4	4	3	3
18	14	11	11	10	10	4	4	4	3
18	15	11	11	10	10	4	4	4	3
18	16	12	11	10	10	5	4	4	3
19	3	9	8	8	8	2	2	2	1
19	4	9	9	9	8	3	2	2	2
19	5	10	9	9	9	3	3	2	2
19	6	10	10	9	9	3	3	2	2
19	7	10	10	9	9	4	3	3	2
19	8	11	10	10	9	4	4	3	3
19	9	11	10	10	9	4	4	3	3
19	10	11	11	10	10	4	4	4	3
19	11	11	11	10	10	5	4	4	3
19	12	12	11	11	10	5	4	4	4
19	13	11	10	10	10	4	4	4	3
19	14	11	11	10	10	4	4	4	3
19	15	12	11	10	10	5	4	4	3
19	16	12	11	11	10	5	4	4	4
20	4	9	9	9	8	3	2	2	2
20	5	10	9	9	9	3	3	2	2
20	6	10	10	9	9	3	3	3	2
20	7	10	10	10	9	4	3	3	2
20	8	11	10	10	9	4	4	3	3
20	9	11	10	10	10	4	4	3	3
20	10	11	11	10	10	4	4	4	3
20	11	12	11	10	10	5	4	4	3
20	12	12	11	11	10	5	4	4	4
20	13	11	11	10	10	4	4	4	3
20	14	11	11	10	10	5	4	4	3
20	15	12	11	11	10	5	4	4	4
20	16	12	11	11	10	5	5	4	4
21	4	9	9	9	8	3	2	2	2
21	5	10	9	9	9	3	3	2	2
21	6	10	10	9	9	4	3	3	2
21	7	10	10	10	9	4	4	3	3

PL L	PL H	ALUM. 42	ALUM. 34	ALUM. 27	ALUM. 20	STEEL 42	STEEL 34	STEEL 27	STEEL 20
21	8	11	10	10	9	4	4	3	3
21	9	11	11	10	10	4	4	4	3
21	10	11	11	10	10	5	4	4	3
21	11	12	11	11	10	5	4	4	4
21	12	12	12	11	10	5	5	4	4
21	13	11	11	10	10	5	4	4	3
21	14	12	11	10	10	5	4	4	3
21	15	12	11	11	10	5	4	4	4
21	16	12	12	11	10	5	5	4	4
22	4	9	9	9	8	3	3	2	2
22	5	10	10	9	9	3	3	2	2
22	6	10	10	9	9	4	3	3	2
22	7	11	10	10	9	4	4	3	3
22	8	11	10	10	10	4	4	3	3
22	9	11	11	10	10	4	4	4	3
22	10	12	11	10	10	5	4	4	3
22	11	12	11	11	10	5	5	4	4
22	12	12	12	11	10	5	5	4	4
22	13	12	11	10	10	5	4	4	3
22	14	12	11	11	10	5	4	4	4
22	15	12	11	11	10	5	5	4	4
22	16	12	12	11	10	5	5	4	4
23	4	10	9	9	9	3	3	2	2
23	5	10	10	9	9	3	3	3	2
23	6	10	10	10	9	4	3	3	3
23	7	11	10	10	9	4	4	3	3
23	8	11	11	10	10	4	4	4	3
23	9	11	11	10	10	5	4	4	3
23	10	12	11	11	10	5	4	4	4
23	11	12	12	11	10	5	5	4	4
23	12	12	12	11	11	5	5	4	4
23	13	12	11	11	10	5	4	4	4
23	14	12	11	11	10	5	5	4	4
23	15	12	12	11	10	5	5	4	4
23	16	12	12	11	11	5	5	4	4
24	4	10	9	9	9	3	3	2	2
24	5	10	10	9	9	4	3	3	2
24	6	10	10	10	9	4	4	3	3
24	7	11	10	10	10	4	4	3	3
24	8	11	11	10	10	4	4	4	3
24	9	12	11	10	10	5	4	4	3
24	10	12	11	11	10	5	5	4	4
24	11	12	12	11	10	5	5	4	4
24	12	12	12	11	11	6	5	4	4
24	13	12	11	11	10	5	4	4	4
24	14	12	12	11	10	5	5	4	4
24	15	12	12	11	10	5	5	4	4
24	16	12	12	11	11	6	5	5	4
25	5	10	10	9	9	4	3	3	2
25	6	11	10	10	9	4	4	3	3
25	7	11	10	10	10	4	4	4	3
25	8	11	11	10	10	5	4	4	3
25	9	12	11	11	10	5	4	4	4
25	10	12	12	11	10	5	5	4	4
25	11	12	12	11	11	5	5	4	4
25	12	12	12	12	11	6	5	5	4
25	13	12	11	11	10	5	5	4	4
25	14	12	12	11	10	5	5	4	4
25	15	12	12	11	11	6	5	4	4
25	16	12	12	12	11	6	5	5	4

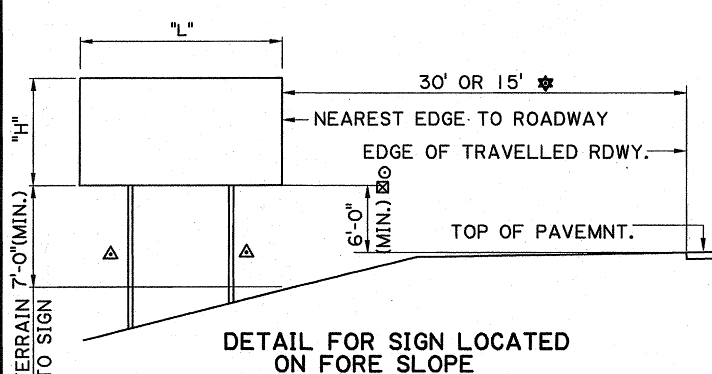

DETAIL FOR SIGN LOCATED ON FORE SLOPE

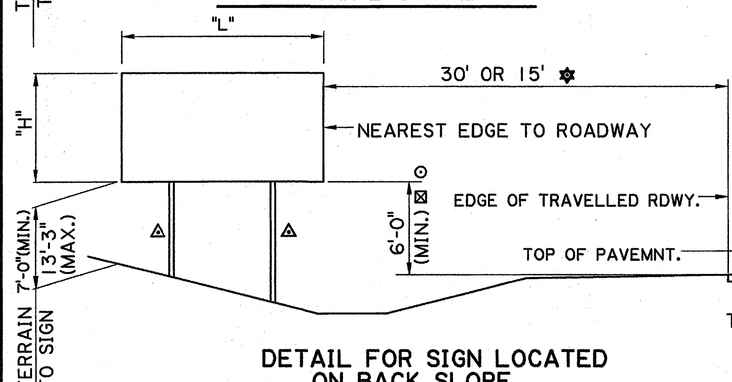

DETAIL FOR SIGN LOCATED ON BACK SLOPE

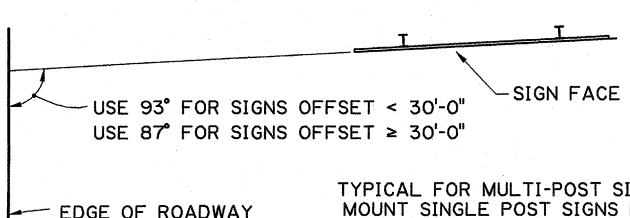

TYPICAL FOR MULTI-POST SIGNS. MOUNT SINGLE POST SIGNS PERPENDICULAR TO EDGE OF RDWY.

LOCATION OF GROUND MOUNTED SIGN STRUCTURES

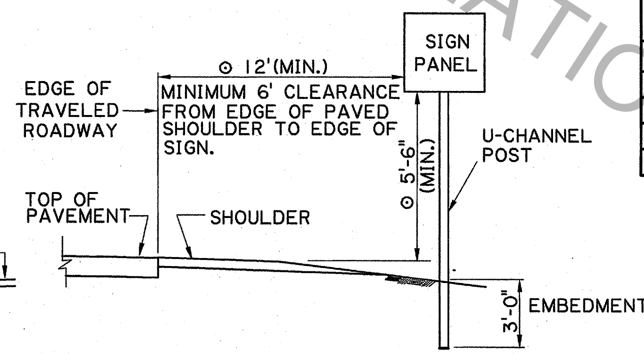

ROADSIDE SIGN U-CHANNEL POST
RURAL

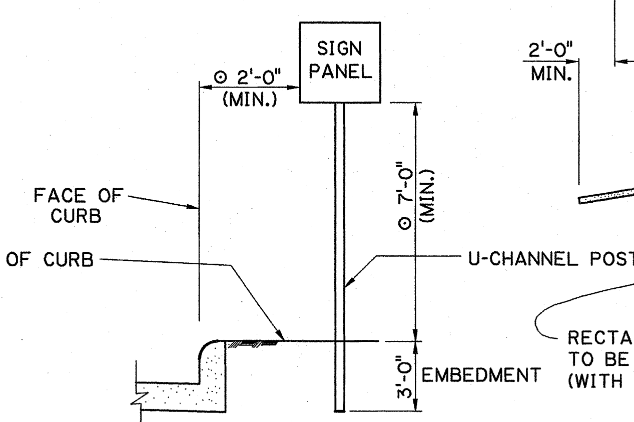

ROADSIDE SIGN U-CHANNEL POST
URBAN

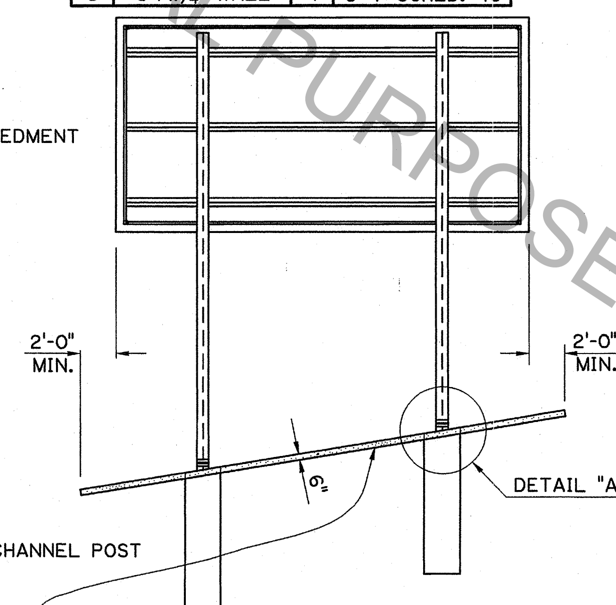

RECTANGULAR CONCRETE SLAB 4' WIDE BY 6" THICK TO BE INCLUDED IN PRICE BID FOR SIGN POST. (WITH WWF)

REAR ELEVATION OF MULTI - POST MOUNTING

W SECTIONS & INDEX NUMBERS

NO.	STEEL	NO.	ALUMINIUM
1	W6x12	7	6WF 4.16
2	W8x18	8	8WF 5.90
3	W8x24	9	8WF 8.32
4	W10x33	10	10WF 11.41
5	W12x40	11	12WF 13.84
6	W12x45	12	12WF 18.34

STATE OF LOUISIANA
PAUL B. FOSSIER, JR.
REG. No. 21028
REGISTERED PROFESSIONAL ENGINEER IN CIVIL ENGINEERING
8/31/00

SHEET NUMBER	
PARISH	
FEDERAL PROJECT	
STATE PROJECT	
DESIGNED	J.C. PORTER
CHECKED	A. BRIDGES
DETAILED	E.DEARMOND
CHECKED	
DATE	JULY, 2000
SHEET	8 OF 11

NO.	DATE	REVISION DESCRIPTION	BY

STATE OF LOUISIANA UNION JUSTICE CONFIDENCE

ROADSIDE MOUNTED SUPPORT DETAILS
TYPE A, B AND D SIGNS

BD.2.7.2.0.8 - ROADSIDE TRAFFIC SIGNS

DEPARTMENT OF TRANSPORTATION AND DEVELOPMENT DOTD

BRIDGE AND STRUCTURAL DESIGN

IP_PWP:dms55699\Roadside Traffic Signs 08.dgn