03-OCT-2011 10:44

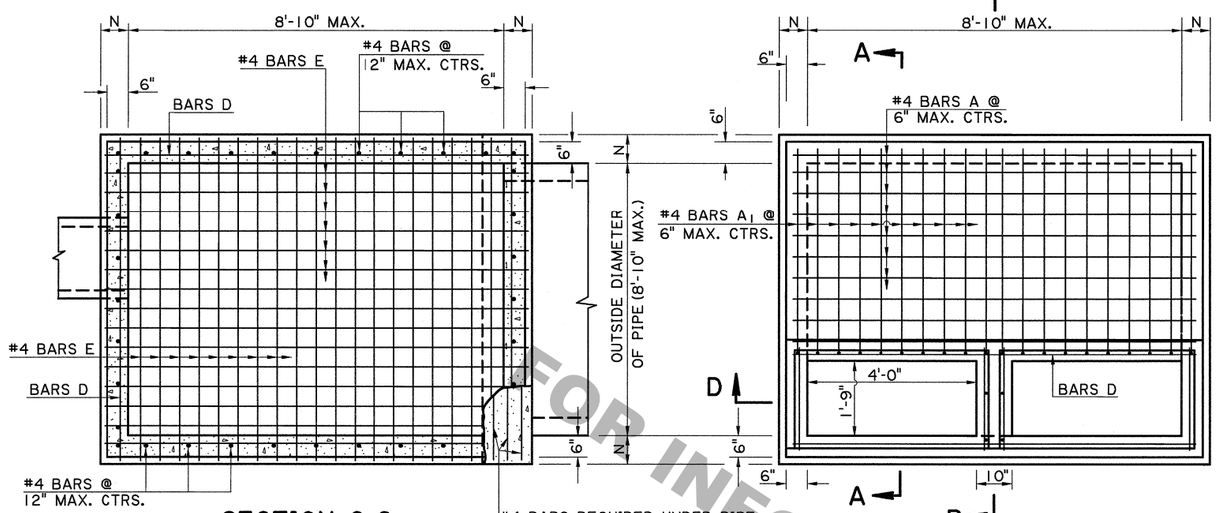

SECTION C-C

(SHOWING BOTTOM SLAB & WALL REINFORCING STEEL)

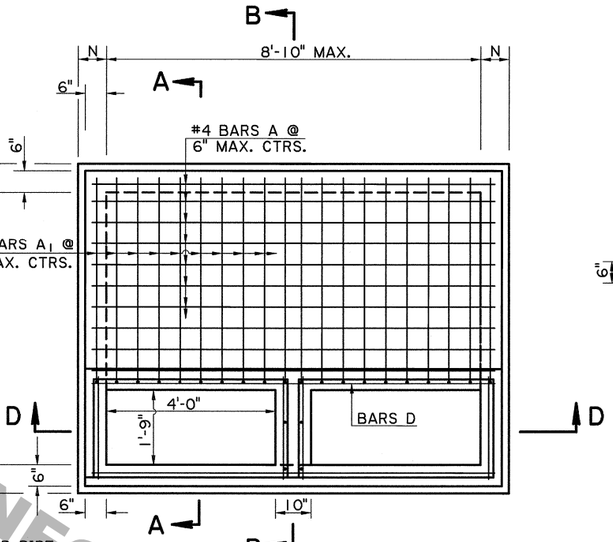

PLAN

(SHOWING TOP SLAB REINFORCING)

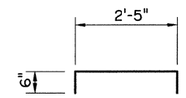

#6 BARS G

GENERAL NOTES:

1. CATCH BASIN IS DESIGNED ACCORDING TO 4TH ED. 2007 AASHTO LRFD PROCEDURES. SECTION 702 OF THE DOTD STANDARD SPECIFICATIONS SHALL APPLY.
2. CONCRETE: ALL CONCRETE SHALL BE CLASS "M" MINOR STRUCTURE. ALL EXPOSED EDGES SHALL BE CHAMFERED ¾ IN. EXCEPT AS NOTED.
3. REINFORCING STEEL: REINFORCING STEEL SHALL BE GRADE 60. DIMENSIONS ARE TO BAR CENTERS. MINIMUM COVER FOR REINFORCING BARS SHALL BE 2 IN. CLEAR UNLESS SHOWN OTHERWISE.
4. AS DEPTH INCREASES THE WALL AND SLAB THICKNESSES AND REINFORCEMENT SHOULD BE INCREASED AS SHOWN IN THE TABLE BELOW. THE CONTRACTOR HAS THE OPTION TO PROVIDE THE MAXIMUM REQUIRED WALL THICKNESS FOR THE FULL DEPTH OF THE STRUCTURE.

DEPTH RANGE	WALLS			BOTTOM SLAB		
	N	D BARS		T	E BARS	
	IN.	SIZE	SPAC.,IN.	IN.	SIZE	SPAC.,IN.
0' TO 7'	6.0	4	4.5	6.0	4	7.5
7'-1" TO 11'	7.0	4	5.0	6.5	4	5.5
11'-1" TO 18'	8.0	5	5.5	7.5	4	4.5
18'-1" TO 20'	8.5	5	5.5	8.0	4	4.0

5. FOR DETAILS OF METAL COVER, FRAME, AND GRATE, SEE STD. PLAN MC-01, TYPE H & TYPE I.
6. THE CONTRACTOR WILL NOT POUR ABOVE THE BOTTOM OF THE SLAB UNTIL THE PAVING ADJACENT TO THE CATCH BASIN HAS BEEN COMPLETED.

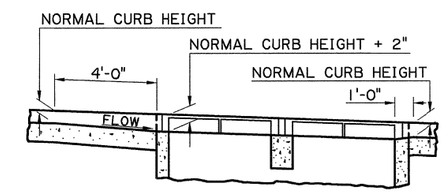

TRANSITION IN CURB HEIGHT CATCH BASIN ON A GRADE

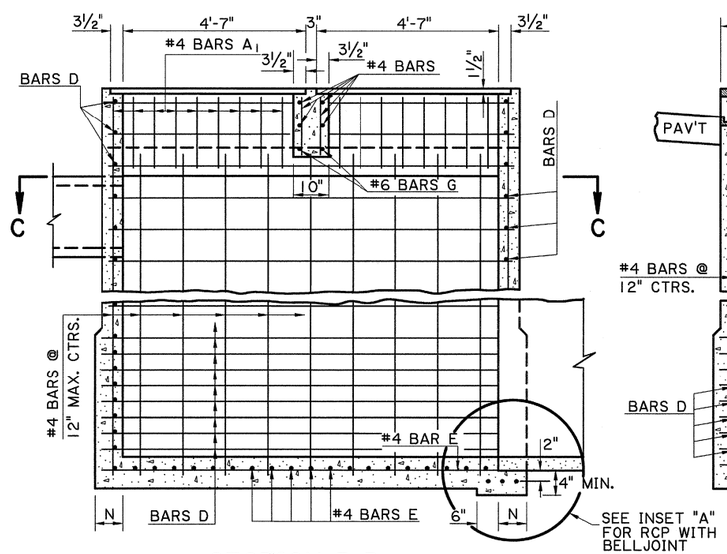

SECTION D-D

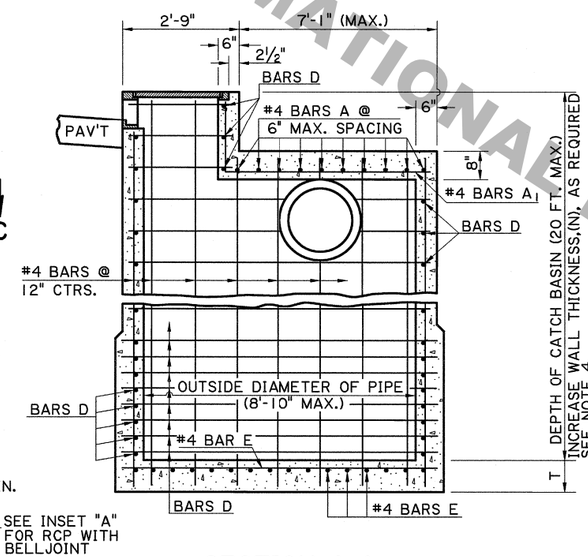

SECTION A-A

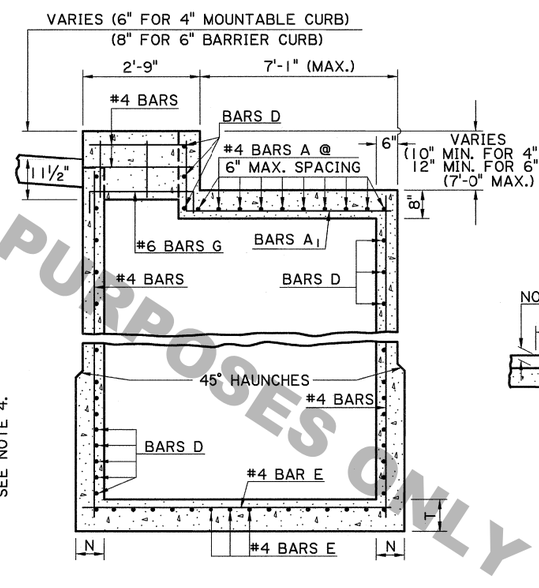

SECTION B-B

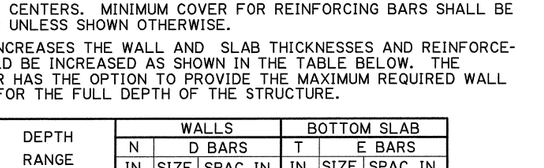

TRANSITION IN CURB HEIGHT CATCH BASIN AT LOW POINT

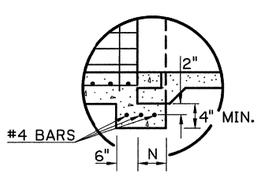

INSET "A"

RCP WITH BELLJOINT

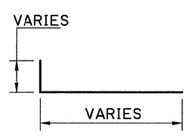

#4 BARS A1

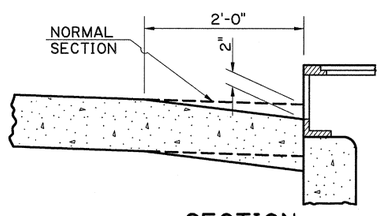

SECTION

SHOWING PAVEMENT SUMP TYPICAL

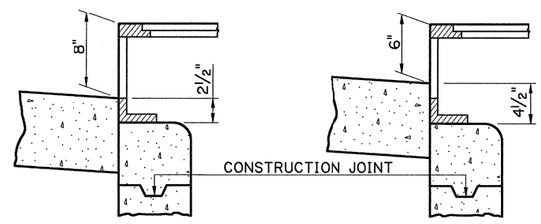

INLET CONFIGURATION

WHEN USED WITH 6" BARRIER CURB

WHEN USED WITH 4" MOUNTABLE CURB

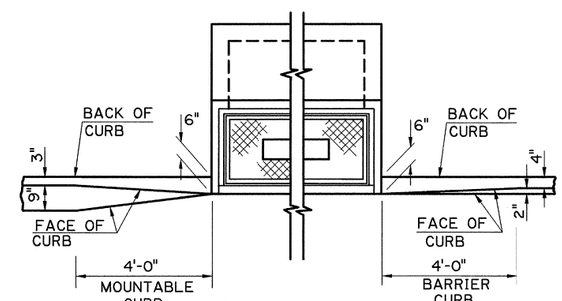

TRANSITION IN CURB WIDTH

(TYPICAL)

FOR INFORMATIONAL PURPOSES ONLY

NO.	DATE	REVISION DESCRIPTION	BY
3	7-15-11	Rev. to AASHTO LRFD Procedures, Rev. size 8'-10"	WMR
2	1-17-07	REV. MAX. DIMENSION IN SECTION A-A	JDK
1	8-18-98	CHANGED SHEET BORDER AND ADDED NAME	JCM

SHEET NUMBER

PARISH | FEDERAL PROJECT | STATE PROJECT

DESIGNED LAB | CHECKED PAA | DETAILED KAJ | CHECKED PAA | DATE 11-15-90 | SHEET 1 OF 1

CONCRETE CATCH BASIN
DOUBLE CURB OPENING
4" Mountable Or 6" Barrier Curb
Max. Size: 8'-10" x 8'-10", Max. Depth 20'

SPECIAL DETAIL CB-2OPEN06

HYDRAULICS SECTION

IP PWP:dms09539\CB-2OPEN06.dgn