03-OCT-2011 10:45

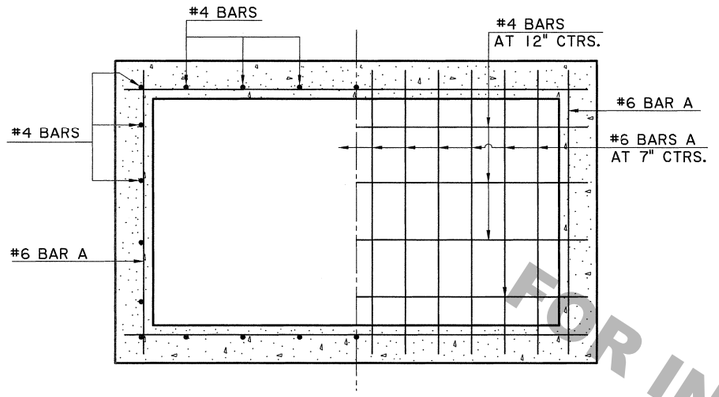

SECTIONAL PLAN

(SHOWING BOTTOM SLAB & WALLS)

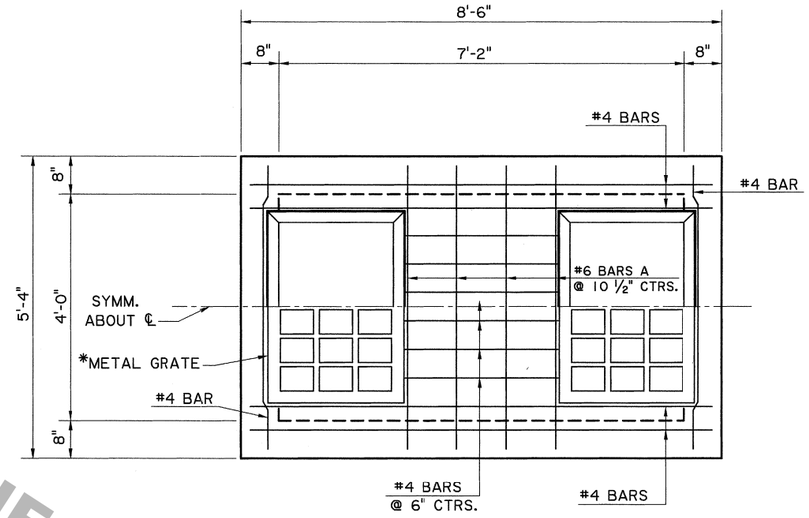

PLAN

*GRATE TO BE TYPE "B" OR "C".
TYPE "B" SHOWN.
(SEE GENERAL NOTES.)

GENERAL NOTES:

1) THIS CATCH BASIN SHOULD ONLY BE USED OUTSIDE OF THE TRAVEL LANE.

2) CATCH BASIN IS DESIGNED ACCORDING TO 4TH ED. 2007 AASHTO LRFD PROCEDURES. SECTION 702 OF THE CURRENT DOTD STANDARD SPECIFICATIONS SHALL APPLY.

3) REINFORCING STEEL SHALL BE GRADE 60. DIMENSIONS ARE TO BAR CENTERS. MINIMUM COVER FOR REINFORCING BARS SHALL BE 2 IN. CLEAR UNLESS SHOWN OTHERWISE.

4) PIPE SIZE AND LOCATION VARIES. CUT REINFORCING STEEL TO CLEAR, AS REQUIRED.

5) TYPE "B" GRATE IS TO BE USED WHERE NO PEDESTRIAN TRAFFIC AND NO VEHICULAR TRAFFIC IS EXPECTED. (DITCHES, ETC.)

6) TYPE "C" GRATE IS TO BE USED WHERE PEDESTRIAN TRAFFIC AND/OR LIGHT VEHICULAR TRAFFIC IS EXPECTED. (DRIVEWAYS, SHOULDERS, ETC.)

7) FOR DETAILS OF GRATE AND SEAT, SEE STD. PLAN MC-01 (TYPE B or C).

8) SEE PLANS FOR TYPE OF GRATE TO BE USED FOR EACH CATCH BASIN.

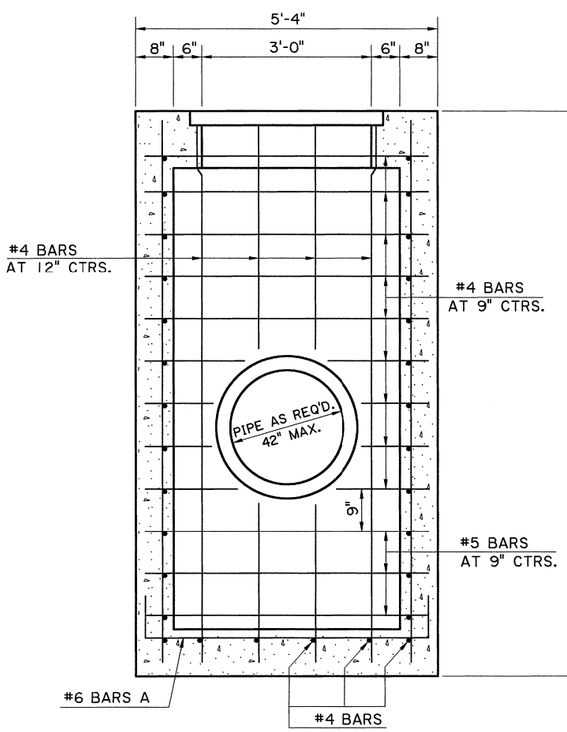

SECTION A-A

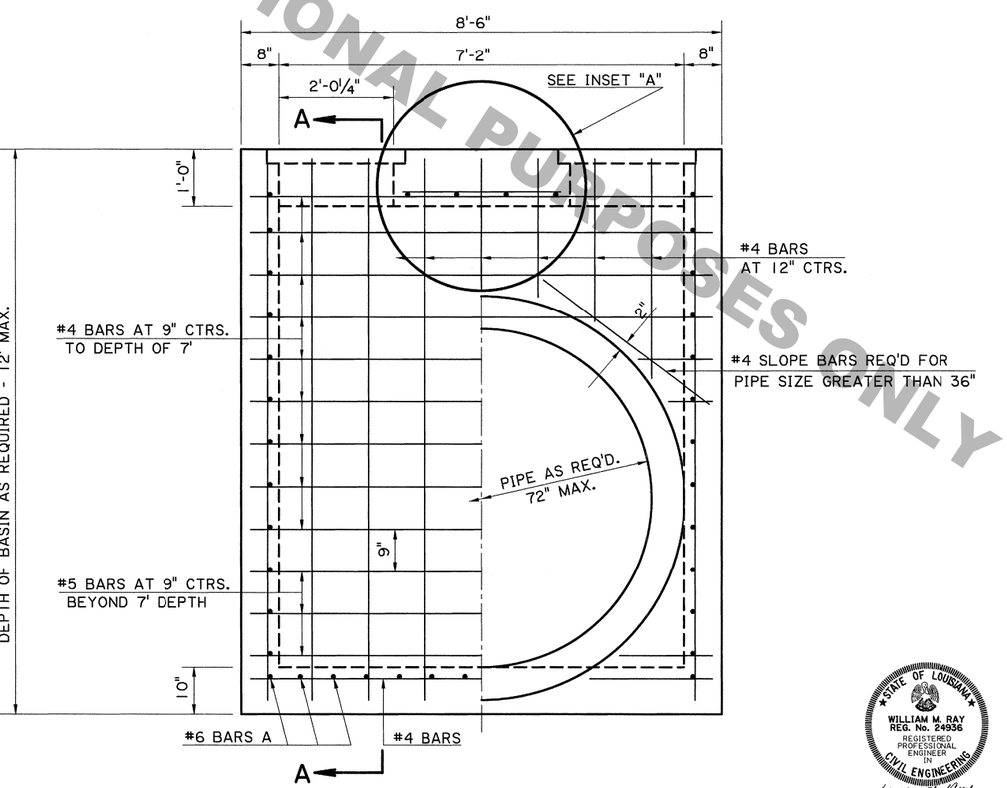

ELEVATION

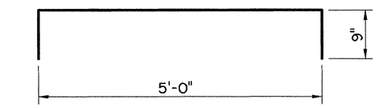

#6 BARS A

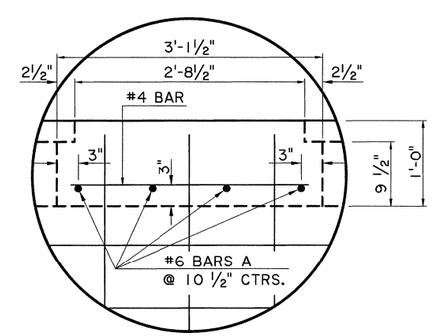

INSET "A"

STATE OF LOUISIANA
WILLIAM M. RAY
REG. No. 24936
REGISTERED PROFESSIONAL ENGINEER IN CIVIL ENGINEERING
8/25/11

FOR INFORMATIONAL PURPOSES ONLY

SHEET NUMBER	
PARISH	
FEDERAL PROJECT	
STATE PROJECT	
DESIGNED / CHECKED	GMD
DETAILED / CHECKED	KAJ / GMD
DATE / SHEET	5-15-84 / 1 OF 1

NO.	DATE	REVISION DESCRIPTION	BY
3	8-25-11	REDRAFTED, REV. TO AASHTO LRFD PROCEDURES.	WMR
2	1-17-06	NEW SHEET, GENERAL REVISIONS	JCM
1	3-23-98	SCANNED ORIGINAL & ADDED NAME	JCM

STATE OF LOUISIANA DEPARTMENT OF TRANSPORTATION AND DEVELOPMENT

DOUBLE OPEN TOP CATCH BASIN

Max. Size: 7'-2" X 4'-0"
Max. Depth: 12'
To be used with Std. Plan MC-01

SPECIAL DETAIL: CB-2TOP02

HYDRAULICS SECTION

IP PWP:dms09539\CB-2TOP02.dgn