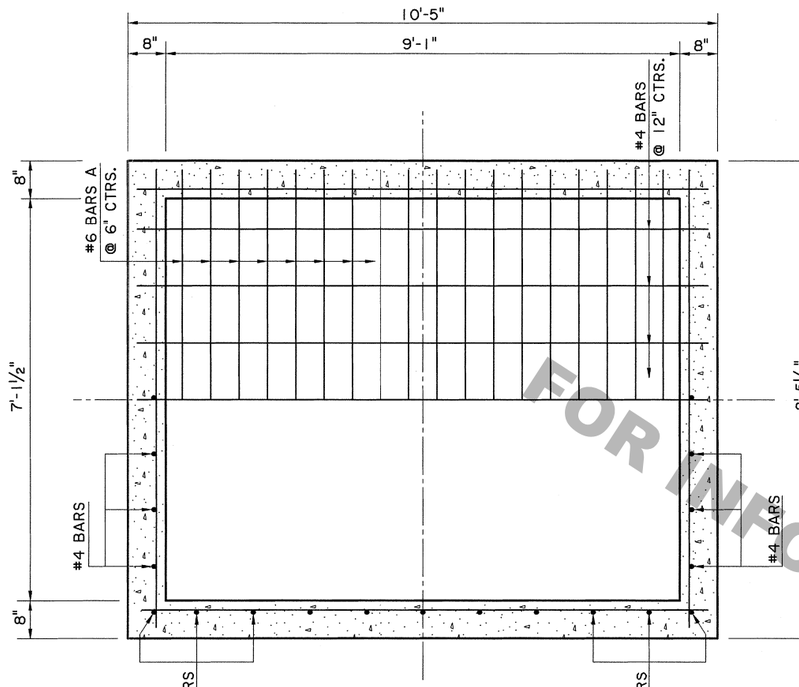

SECTIONAL PLAN

(SHOWING BOTTOM SLAB & WALLS)

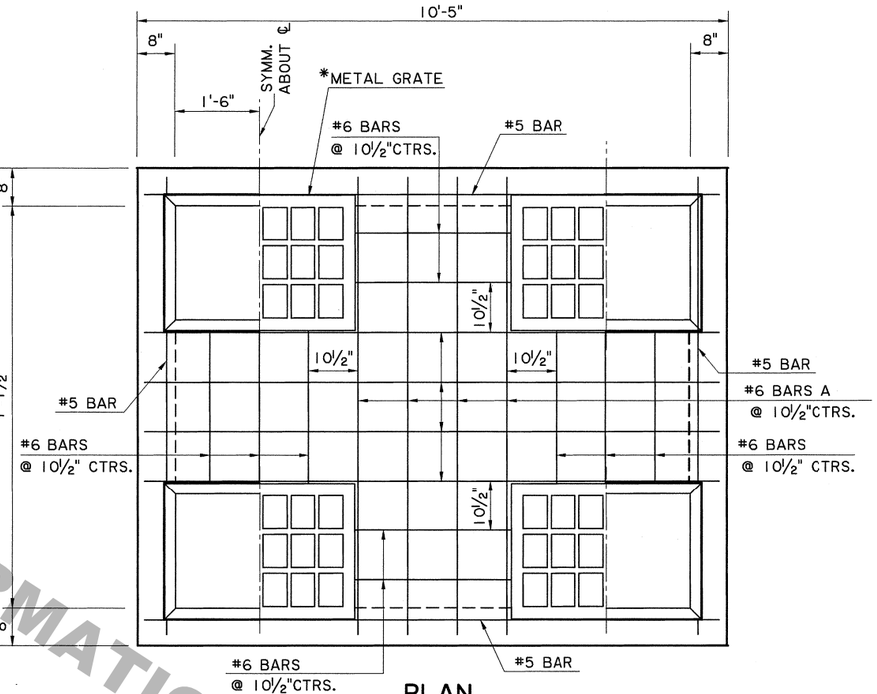

PLAN

*GRATE TO BE TYPE "B" OR "C". TYPE "B" SHOWN.
(SEE GENERAL NOTES)

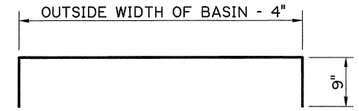

#6 BARS A

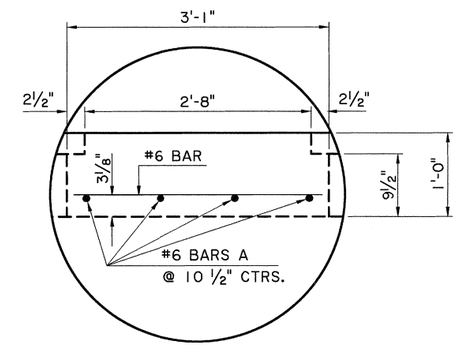

INSET "A"

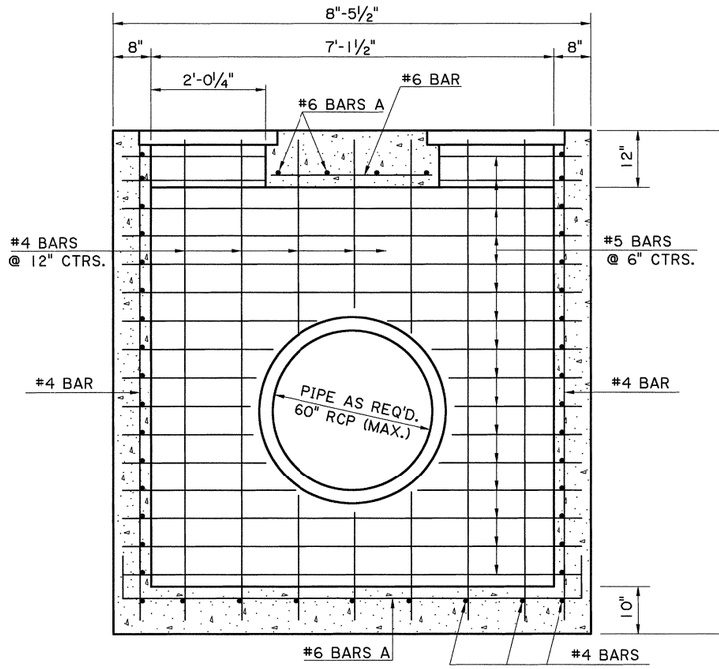

SECTION A-A

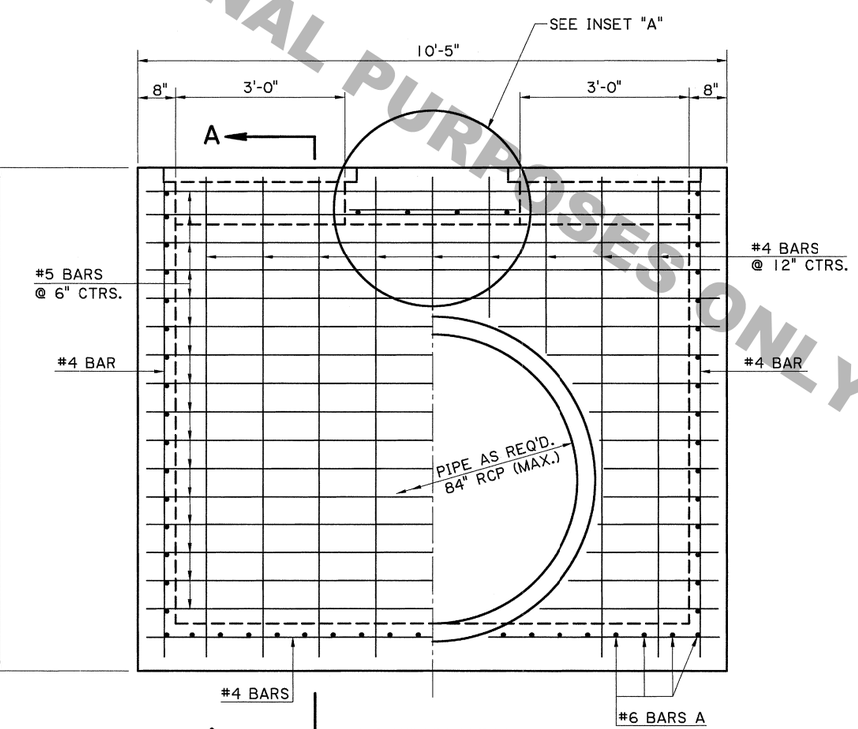

ELEVATION

GENERAL NOTES:

1) THIS CATCH BASIN SHOULD ONLY BE USED OUTSIDE OF THE TRAVEL LANE.

2) CATCH BASIN IS DESIGNED ACCORDING TO 4TH ED. 2007 AASHTO LRFD PROCEDURES. SECTION 702 OF THE CURRENT DOTD STANDARD SPECIFICATIONS SHALL APPLY.

3) REINFORCING STEEL SHALL BE GRADE 60. DIMENSIONS ARE TO BAR CENTERS. MINIMUM COVER FOR REINFORCING BARS SHALL BE 2 IN. CLEAR UNLESS SHOWN OTHERWISE.

4) PIPE SIZE AND LOCATION VARIES. CUT REINFORCING STEEL TO CLEAR, AS REQUIRED.

5) TYPE "B" GRATE IS TO BE USED WHERE NO PEDESTRIAN TRAFFIC AND NO VEHICULAR TRAFFIC IS EXPECTED. (DITCHES, ETC.)

6) TYPE "C" GRATE IS TO BE USED WHERE PEDESTRIAN TRAFFIC AND/OR LIGHT VEHICULAR TRAFFIC IS EXPECTED. (DRIVEWAYS, SHOULDERS, ETC.)

7) FOR DETAILS OF GRATE AND SEAT, SEE STD. PLAN MC-01 (TYPE B or C).

8) SEE PLANS FOR TYPE OF GRATE TO BE USED FOR EACH CATCH BASIN.

STATE OF LOUISIANA
WILLIAM M. RAY
REG. No. 24936
REGISTERED PROFESSIONAL ENGINEER IN CIVIL ENGINEERING
William M. Ray 8/25/11

NO.	DATE	REVISION DESCRIPTION	BY
4	8-25-11	REV. TO AASHTO LRFD PROCEDURES, GEN. REV.	WMR
3	1-17-06	REVISED GENERAL NOTES	JCM
2	5-23-00	ADDED NEW SHEET	JCM
1	8-19-98	ADDED NAME CB-OPNTOP4	JCM

DESIGNED WMR
CHECKED
DETAILED KAJ
CHECKED WMR
DATE 7-6-95
SHEET 1 OF 1
PARISH
FEDERAL PROJECT
STATE PROJECT
SHEET NUMBER

OPEN TOP CATCH BASIN
4 GRATE OPENINGS
Max. Size: 9'-1" X 7'-1½", Max. Depth 12'
To Be used with Std. Plan MC-01
SPECIAL DETAIL CB-OPNTOP4

HYDRAULICS SECTION

FOR INFORMATIONAL PURPOSES ONLY

IP_PWP:dms09539\CB-OPNTOP4.dgn 03-OCT-2011 10:46