5/29/2012 08:35

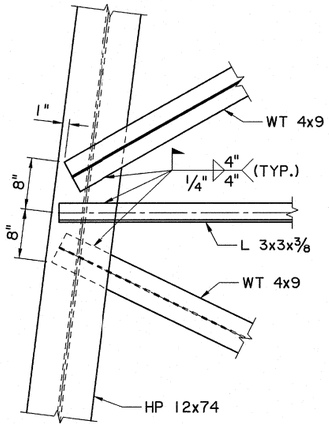

DETAIL "A"

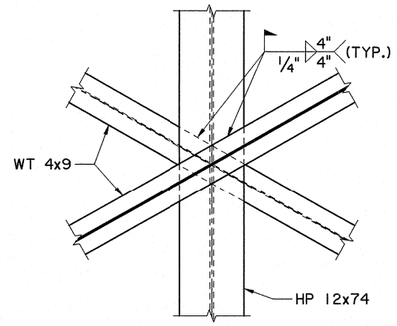

DETAIL "B"

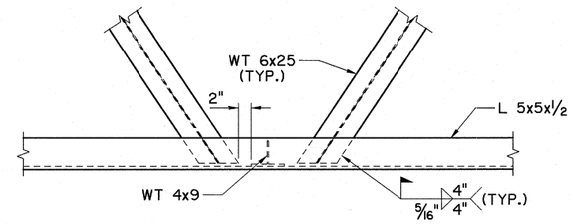

DETAIL "C"

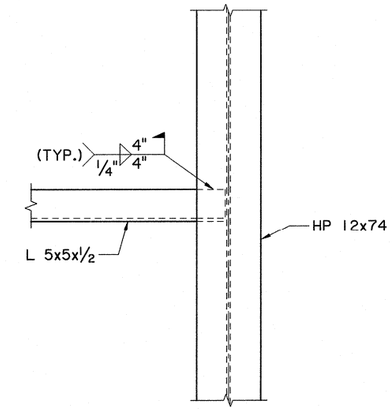

DETAIL "D"

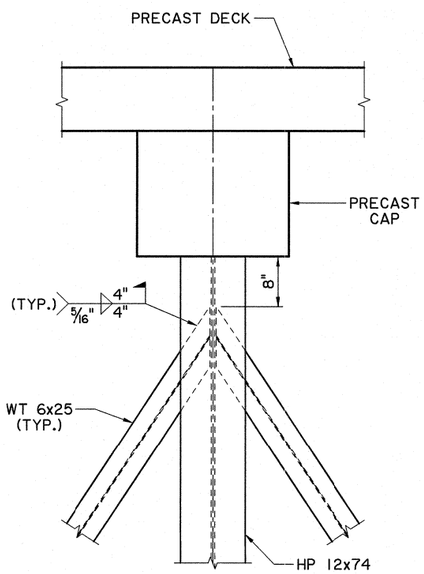

DETAIL "E"

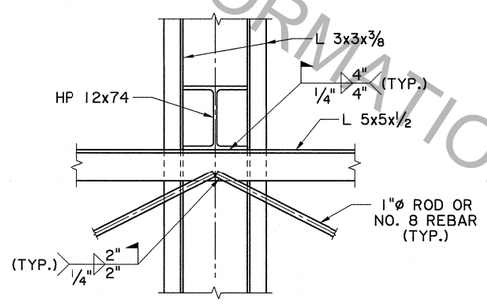

DETAIL "F"

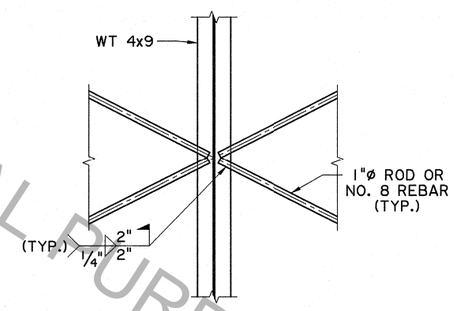

DETAIL "G"

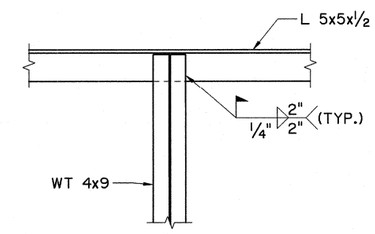

DETAIL "H"

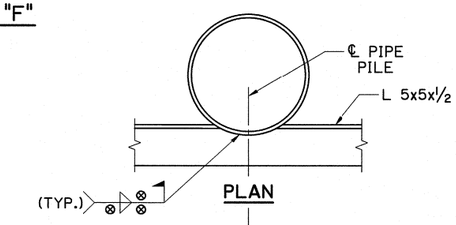

PLAN

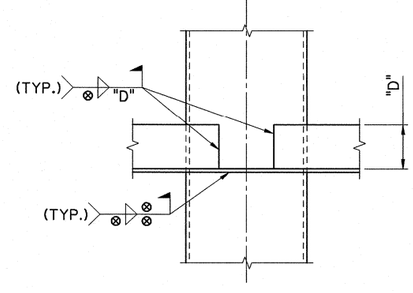

ELEVATION

EXAMPLE DETAIL

CONNECTION OF ANGLE MEMBER
TO PIPE PILE

⊗ WHEN PIPE PILES ARE USED IN LIEU OF H-PILES, THE "WT" AND ANGLE MEMBERS SHALL BE CUT SO THAT THEY FIT FLUSH WITH THE PILES PRIOR TO WELDING. THE MINIMUM WELD SIZE AND LENGTH FOR THE CONNECTION OF THESE MEMBERS TO THE PILES, SHALL BE AS DETAILED FOR THE H-PILE CONNECTIONS.

STATE OF LOUISIANA
JUSTIN C. PELTIER
License No. 34765
PROFESSIONAL ENGINEER
IN
CIVIL ENGINEERING
5/8/2012

FOR INFORMATIONAL PURPOSES ONLY

SHEET NUMBER	
PARISH	CONTROL SECTION	STATE PROJECT
DESIGNED T. LE	CHECKED J. PELTIER	DETAILED J. PELTIER	CHECKED M. HEBERT	SERIES NUMBER 5 OF 15

NO.	DATE	REVISION OR CHANGE ORDER DESCRIPTION	BY

SWAY BRACING DETAILS
BENT CASES S3 & S4

BD2.8.1.0.05 - DETOUR BRIDGE

BRIDGE & STRUCTURAL DESIGN

IP_PWP:dms55670\Detour Bridge 05.dgn