5/29/2012 08:43

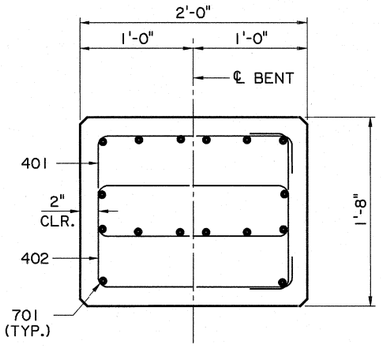


SECTION C-C

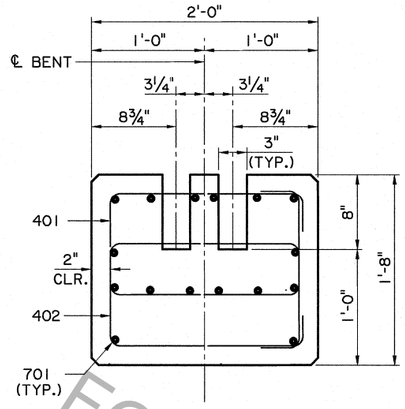


SECTION D-D

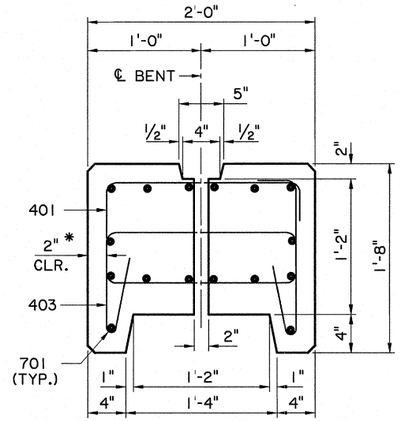


SECTION E-E

* 1" CLEAR FOR 403 BARS

| ESTIMATED QUANTITIES (ONE SINGLE ROW CAP) | | | | |
|---|---|---|---|---|
| BAR | NO. | UNIT LENGTH | TOTAL LENGTH | LOCATION |
| 701 | 16 | 27'-8" | 442'-8" | LONGIT. IN CAP |
| | | | | |
| TOTAL NO. 7 BARS = 442'-8" = 905 LBS. | | | | |
| 401 | 50 | 6'-2" | 308'-4" | UPPER STIRRUPS |
| 402 | 40 | 5'-10" | 233'-4" | LOWER STIRRUPS |
| 403 | 10 | 5'-2" | 51'-8" | LOWER STIRRUPS ABOVE PILES |
| | | | | |
| TOTAL NO. 4 BARS = 593'-4" = 397 LBS. | | | | |
| TOTAL DEFORMED REINFORCING STEEL = 1302 LBS. | | | | |
| TOTAL CLASS "P" CONCRETE = 3.33 CU. YDS. | | | | |

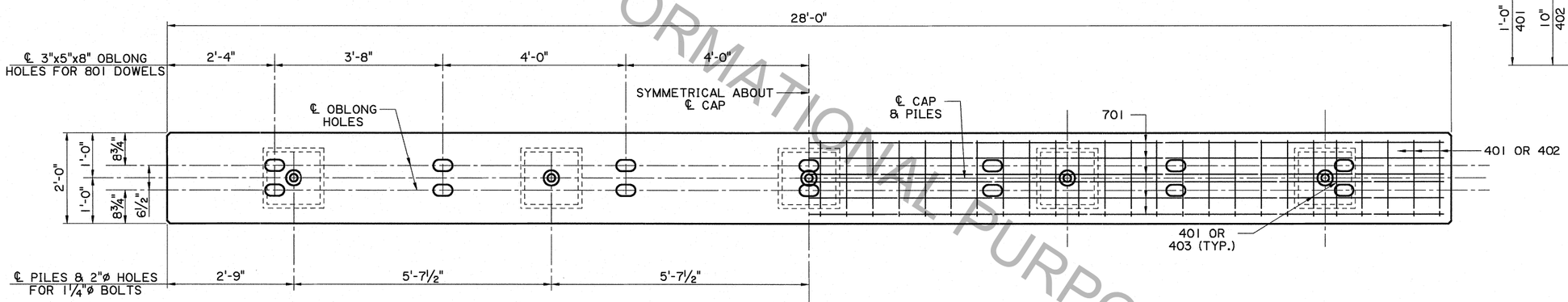


HALF PLAN
SHOWING HOLES & SPACING FOR BOLTS & DOWELS

PLAN

HALF PLAN
SHOWING REINFORCING STEEL

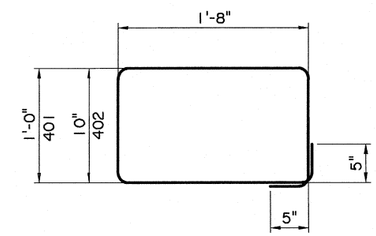


401 & 402
(2"ø PIN)

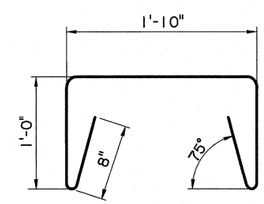


403
(2"ø PIN)

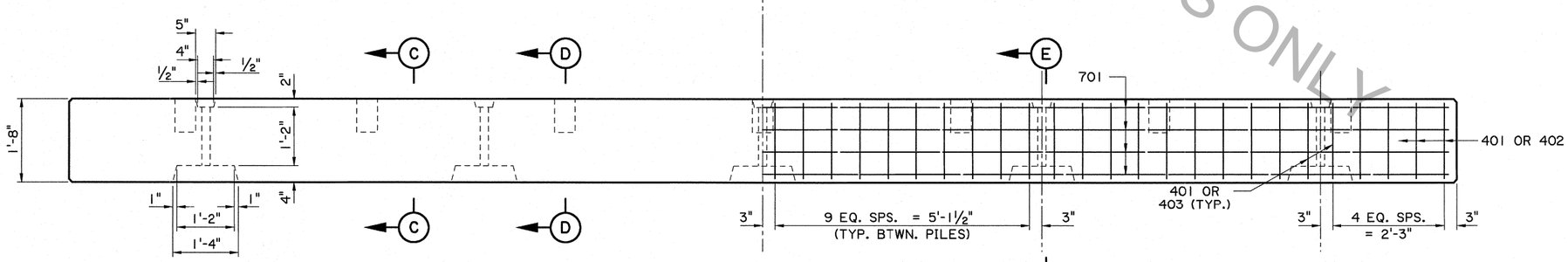


HALF ELEVATION
SHOWING HOLES & SPACING FOR BOLTS & DOWELS

HALF ELEVATION
SHOWING REINFORCING STEEL

STATE OF LOUISIANA
JUSTIN C. PELTIER
License No. 34765
PROFESSIONAL ENGINEER
IN
CIVIL ENGINEERING

Justin C. Peltier
5/9/2012

FOR INFORMATIONAL PURPOSES ONLY

SHEET NUMBER

PARISH | CONTROL SECTION | STATE PROJECT

DESIGNED T. LE
CHECKED J. PELTIER
DETAILED J. PELTIER
CHECKED M. HEBERT
SERIES NUMBER 7 OF 15

NO. | DATE | REVISION OR CHANGE ORDER DESCRIPTION | BY

END BENT TYPE "A" AND INTERMEDIATE BENT DETAILS

BD2.8.1.0.07 - DETOUR BRIGE

STATE OF LOUISIANA DEPARTMENT OF TRANSPORTATION AND DEVELOPMENT DOTD

BRIDGE & STRUCTURAL DESIGN

IP_PWP:dms55670\Detour Bridge 07.dgn