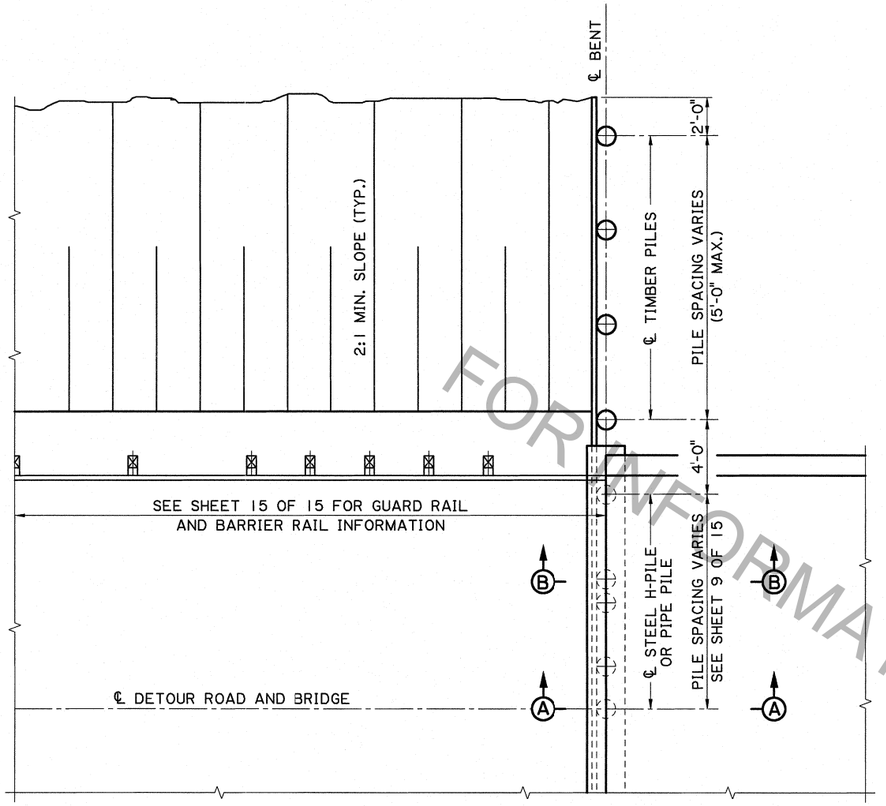

HALF PLAN

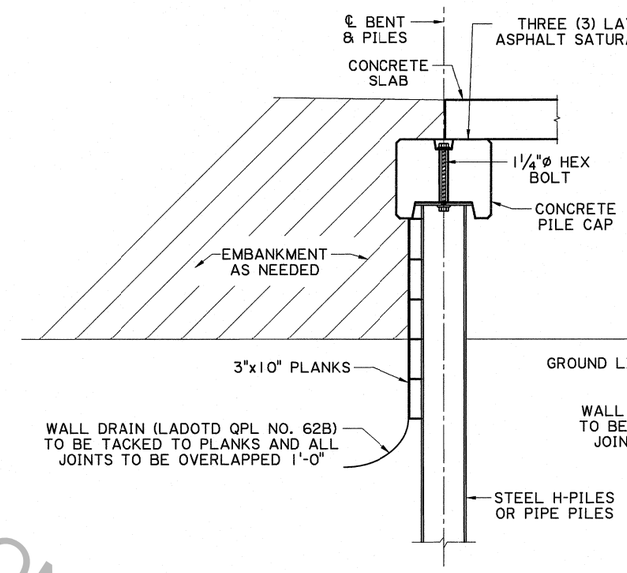

SECTION A-A

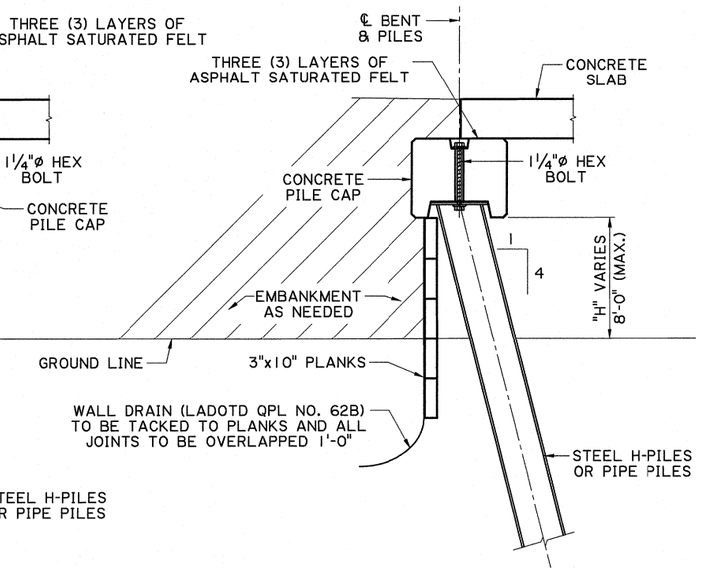

SECTION B-B

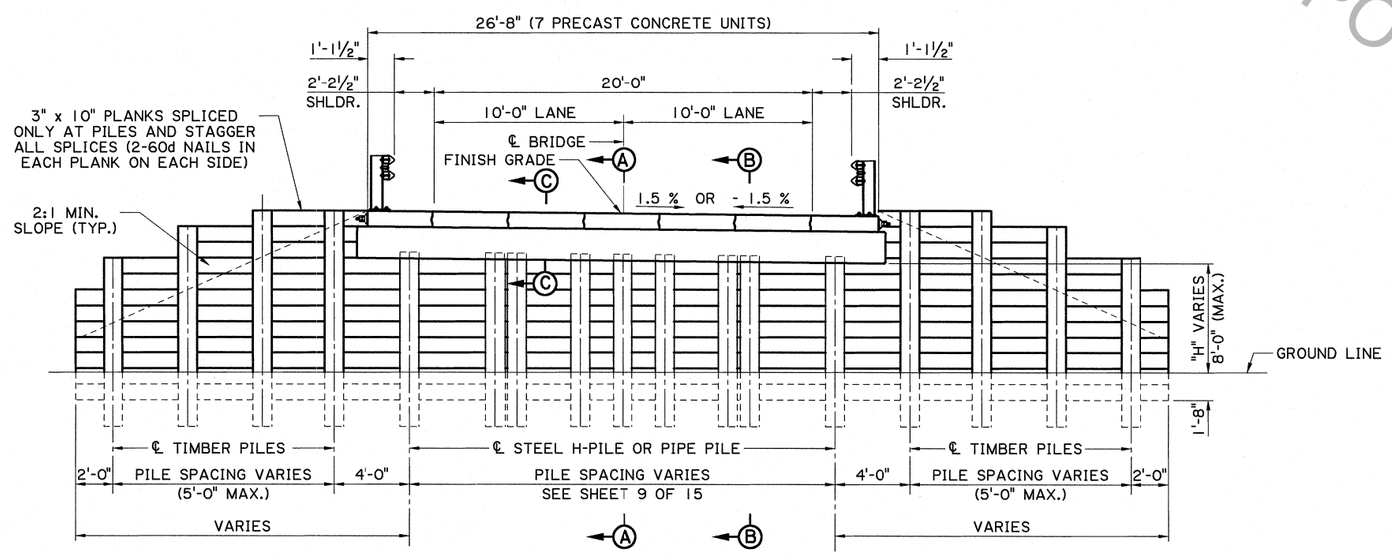

ELEVATION
SHOWING BULKHEAD

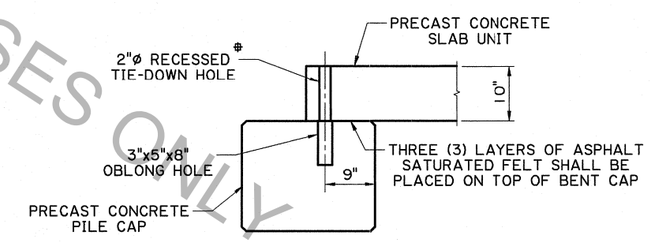

SECTION C-C

⊕ USE AN ADEQUATE DEBONDER TO PREVENT THE BONDING OF THE GROUT WITH THE SLAB AND THE PILE CAP BEFORE GROUTING THE HOLES.

STATE OF LOUISIANA
JUSTIN C. PELTIER
License No. 34765
PROFESSIONAL ENGINEER
IN
CIVIL ENGINEERING
5/15/2012

FOR INFORMATIONAL PURPOSES ONLY

SHEET NUMBER	
PARISH	
CONTROL SECTION	
STATE PROJECT	
DESIGNED T. LE	
CHECKED J. PELTIER	
DETAILED J. PELTIER	
CHECKED M. HEBERT	
SERIES NUMBER 8 OF 15	

NO.	DATE	REVISION OR CHANGE ORDER DESCRIPTION	BY

END BENT TYPE "B" DETAILS

BD2.8.1.0.08 - DETOUR BRIDGE

BRIDGE & STRUCTURAL DESIGN