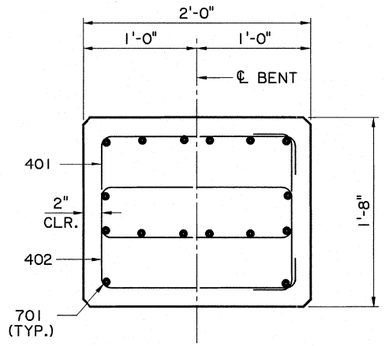

SECTION E-E

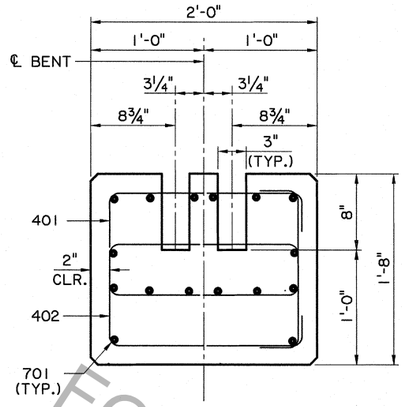

SECTION F-F

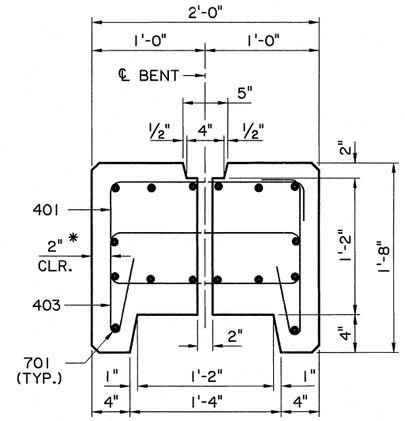

SECTION G-G

* 1" CLEAR FOR 403 BARS

ESTIMATED QUANTITIES (ONE SINGLE ROW CAP)				
BAR	NO.	UNIT LENGTH	TOTAL LENGTH	LOCATION
701	16	27'-8"	442'-8"	LONGIT. IN CAP
TOTAL NO. 7 BARS = 442'-8" = 905 LBS.				
401	54	6'-2"	333'-0"	UPPER STIRRUPS
402	34	5'-10"	198'-4"	LOWER STIRRUPS
403	20	5'-2"	103'-4"	LOWER STIRRUPS ABOVE PILES
TOTAL NO. 4 BARS = 634'-8" = 424 LBS.				
TOTAL DEFORMED REINFORCING STEEL = 1329 LBS.				
TOTAL CLASS "P" CONCRETE = 3.26 CU. YDS.				

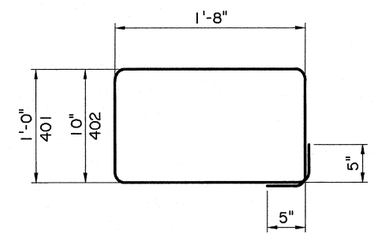

401 & 402
(2"ø PIN)

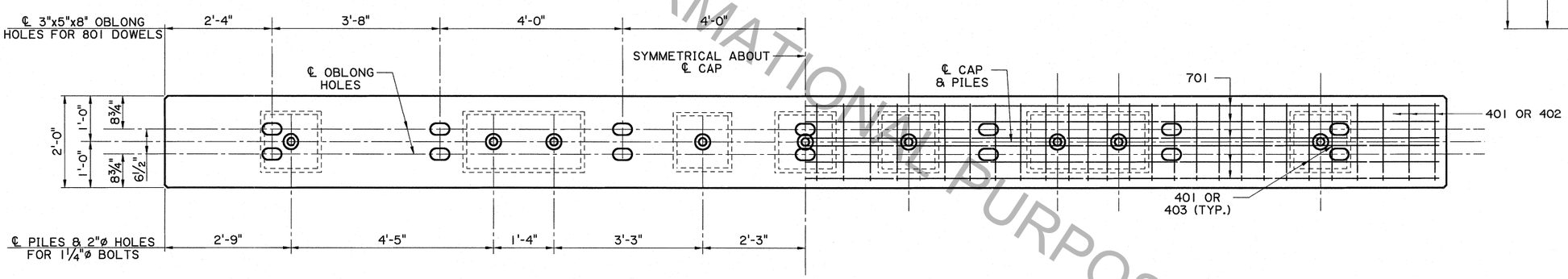

HALF PLAN
SHOWING HOLES & SPACING FOR BOLTS & DOWELS

PLAN

HALF PLAN
SHOWING REINFORCING STEEL

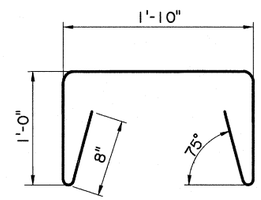

403
(2"ø PIN)

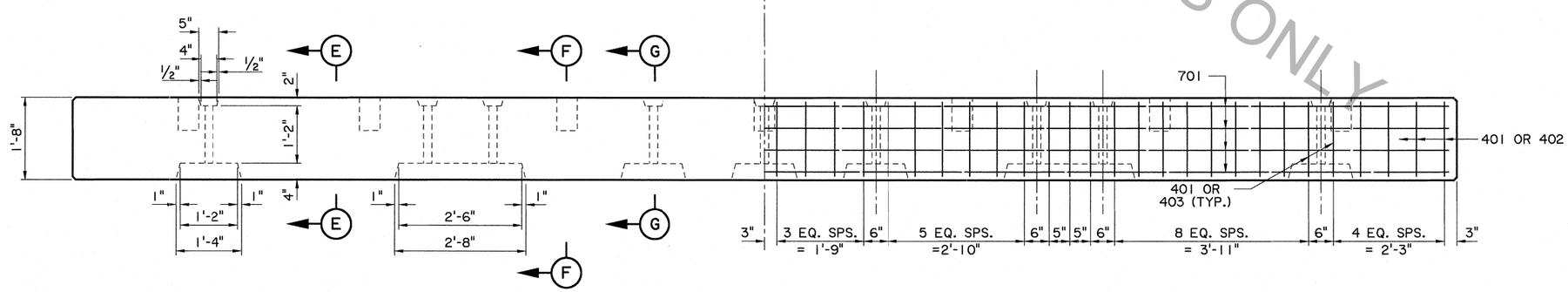

HALF ELEVATION
SHOWING HOLES & SPACING FOR BOLTS & DOWELS

HALF ELEVATION
SHOWING REINFORCING STEEL

STATE OF LOUISIANA
JUSTIN C. PELTIER
License No. 34765
PROFESSIONAL ENGINEER IN CIVIL ENGINEERING
5/8/2012

FOR INFORMATIONAL PURPOSES ONLY

SHEET NUMBER	
PARISH	CONTROL SECTION / STATE PROJECT
DESIGNED T. LE / CHECKED J. PELTIER	DETAILED J. PELTIER / CHECKED M. HEBERT	SERIES NUMBER 10 OF 15

NO.	DATE	REVISION OR CHANGE ORDER DESCRIPTION	BY

STATE OF LOUISIANA DEPARTMENT OF TRANSPORTATION AND DEVELOPMENT

END BENT TYPE "B" DETAILS

BD2.8.1.0.10 - DETOUR BRIDGE

BRIDGE & STRUCTURAL DESIGN