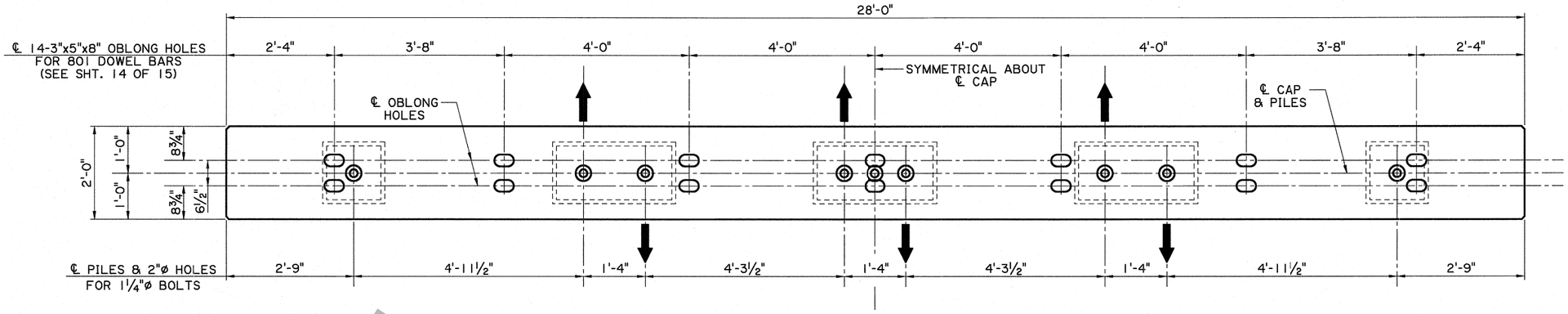

PLAN

⊗ BATTER EXTERIOR PILES 1½ ON 12 FOR "H" > 12'-0".

INTERIOR PILES ARE BATTERED 1½ ON 12.

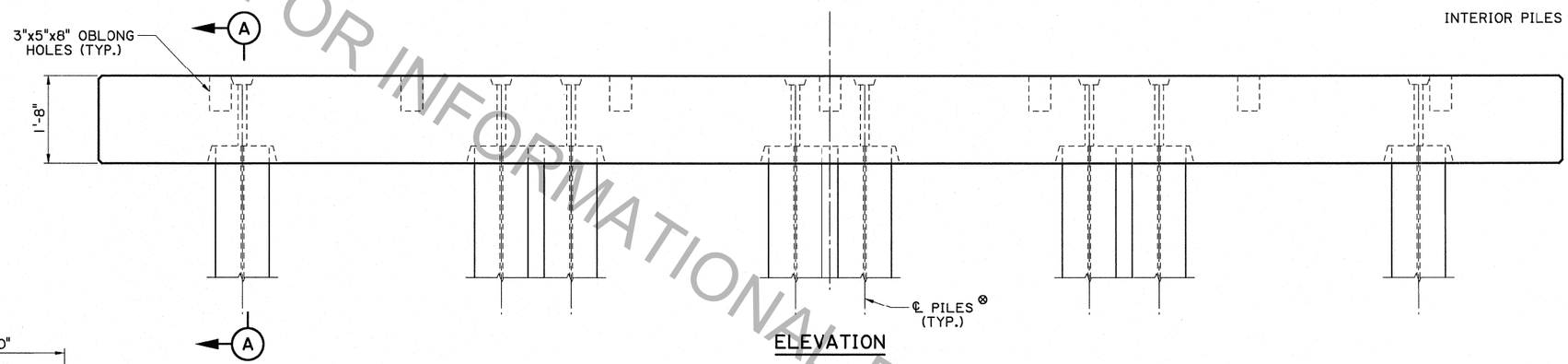

ELEVATION

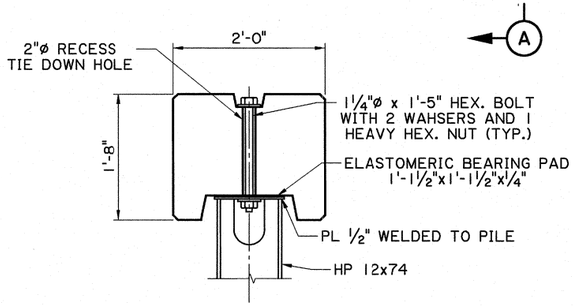

SECTION A-A

H-PILE

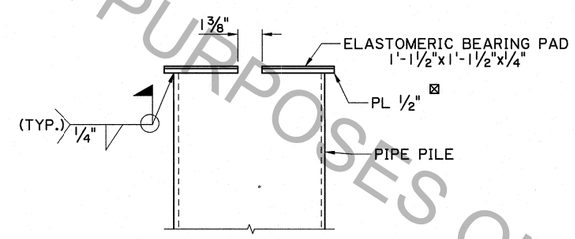

CONNECTION DETAIL

ELEVATION VIEW THROUGH ℄ SHOWING PILE TO PLATE CONNECTION (PIPE PILE)

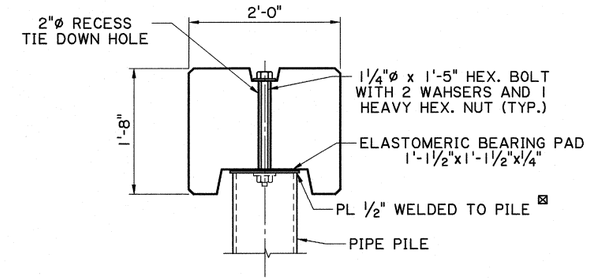

SECTION A-A

PIPE PILE

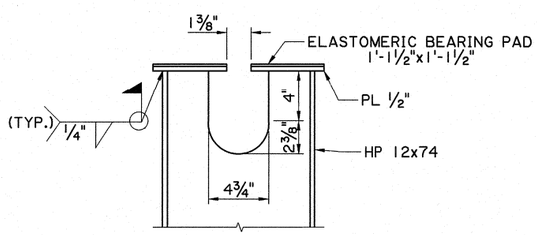

CONNECTION DETAIL

ELEVATION VIEW THROUGH ℄ SHOWING CUT-OUT DIMENSIONS (H-PILE)

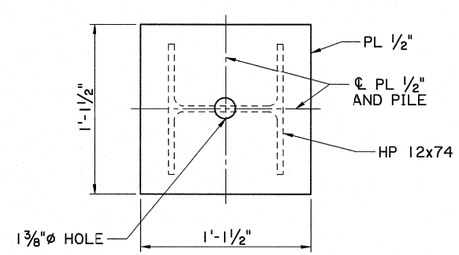

CONNECTION DETAIL

PLAN VIEW SHOWING PLATE DIMENSIONS (H-PILE)

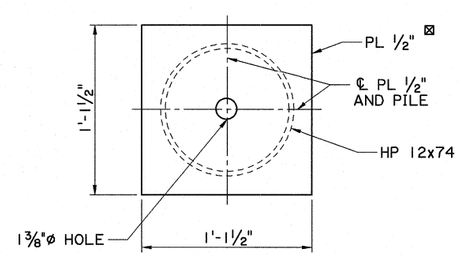

CONNECTION DETAIL

PLAN VIEW SHOWING PLATE DIMENSIONS (PIPE PILE)

⊠ THE PL ½" AND THE ELASTOMERIC BEARING PAD SHALL BE BOLTED TO THE CAP PRIOR TO THE PLACEMENT OF THE CAP ON TOP OF THE PIPE PILES. ONCE THE CAP IS PLACED TOP OF THE PILES, THE PLATES SHALL BE WELDED TO THE PILES.

STATE OF LOUISIANA
JUSTIN C. PELTIER
License No. 34765
PROFESSIONAL ENGINEER
IN
CIVIL ENGINEERING
5/8/2012

FOR INFORMATIONAL PURPOSES ONLY

SHEET NUMBER	PARISH	CONTROL SECTION	STATE PROJECT

DESIGNED	T. LE
CHECKED	J. PELTIER
DETAILED	J. PELTIER
CHECKED	M. HEBERT
SERIES NUMBER	11 OF 15

NO.	DATE	REVISION OR CHANGE ORDER DESCRIPTION	BY

ANCHOR BENT DETAILS

BD2.8.1.0.1 - DETOUR BRIDGE

BRIDGE & STRUCTURAL DESIGN

IP_PWP:dms55670\Detour Bridge 11.dgn 5/29/2012 09:01