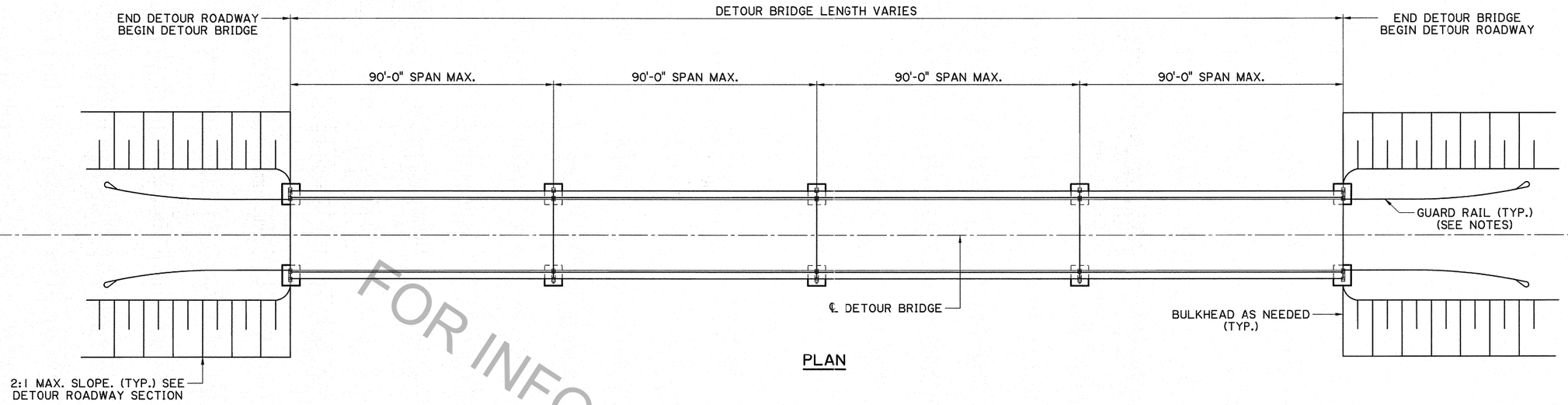

PLAN

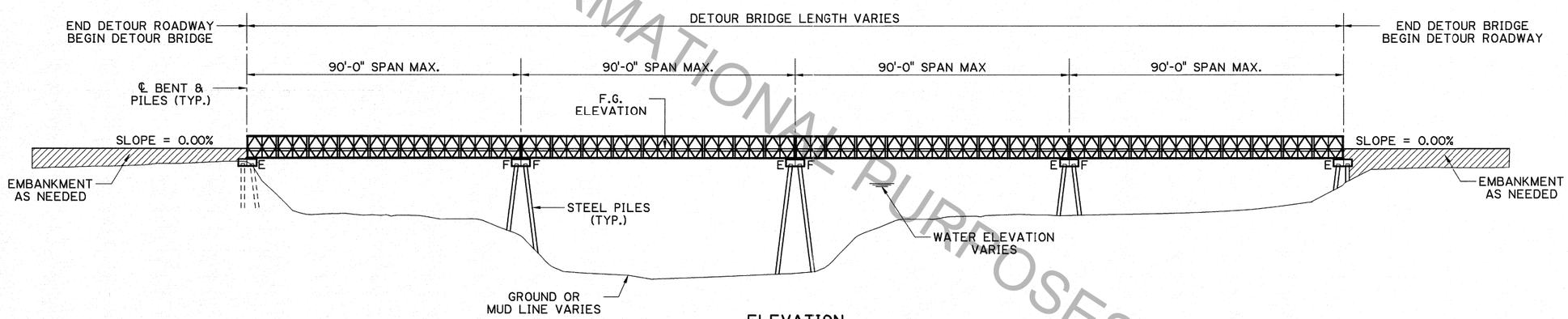

ELEVATION

NOTES:

FOR MORE GUARD RAIL INFORMATION, SEE STANDARD PLAN GR-200 AND BULKHEAD AND GUARD RAIL DETAILS SHEETS.

DETOUR BRIDGE SHALL NOT BE DESIGNED OR CONSTRUCTED IN A HORIZONTAL OR VERTICAL CURVE.

SUBSTRUCTURE DESIGN ASSUMPTIONS:

SPAN CONFIGURATION - SIMPLE SPAN
MAXIMUM SPAN LENGTH - 90'-0"
TRUSS CONFIGURATION - DSR2
SCOUR - 5'-0" OF LOCAL SCOUR
ASPHALT WEARING SURFACE/OVERLAY - 2"

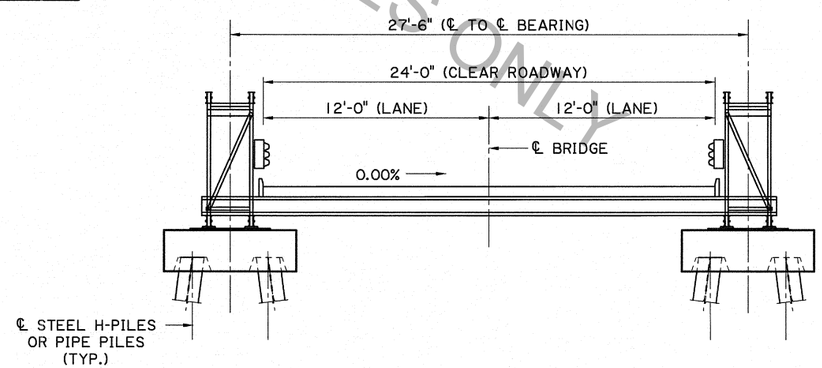

TYPICAL CROSS SECTION
SHOWING INTERMEDIATE BENT

STATE OF LOUISIANA
JUSTIN C. PELTIER
License No. 34765
PROFESSIONAL ENGINEER
IN
CIVIL ENGINEERING
2/25/2013

FOR INFORMATIONAL PURPOSES ONLY

SHEET NUMBER	
PARISH	
CONTROL SECTION	
STATE PROJECT	
DESIGNED J. PELTIER	
CHECKED M. HEBERT	
DETAILED J. PELTIER	
CHECKED M. HEBERT	
REVIEWED K. BRAUNER	
SERIES # 3 OF 13	

NO.	DATE	REVISION OR CHANGE ORDER DESCRIPTION	BY

BRIDGE GENERAL PLAN

BD.2.8.2.0.03 STEEL PANEL DETOUR BRIDGE

BRIDGE & STRUCTURAL DESIGN

IP_PWP:dms55670\Steel Panel Detour Bridge 3.dgn 7/3/2013 14:15