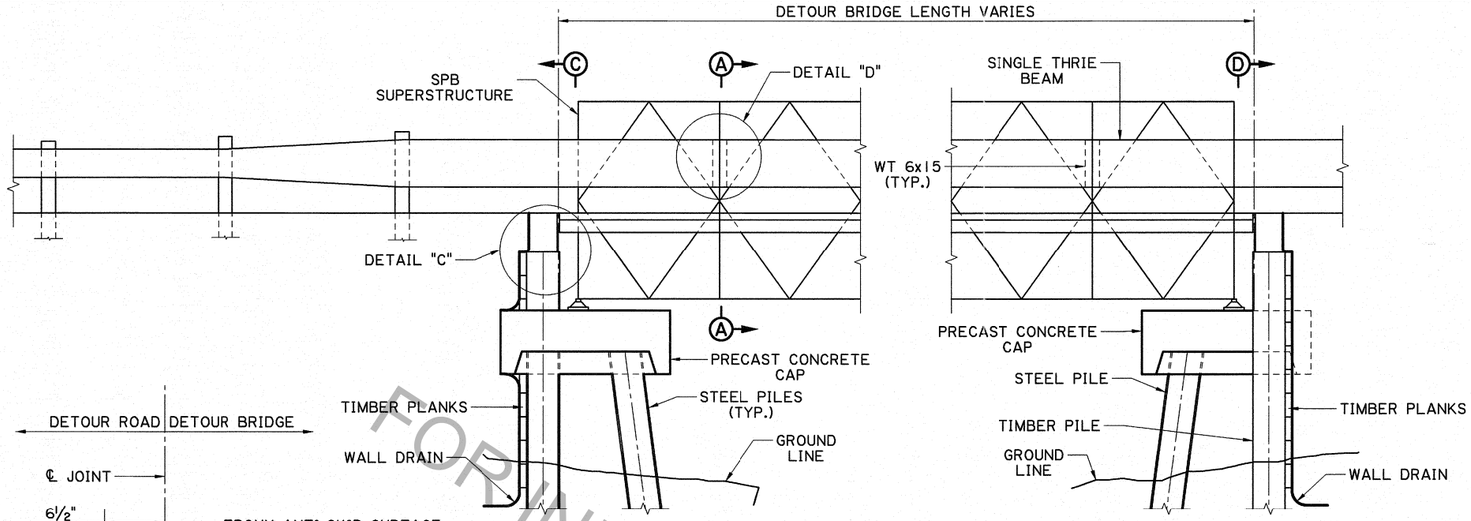

PROFILE

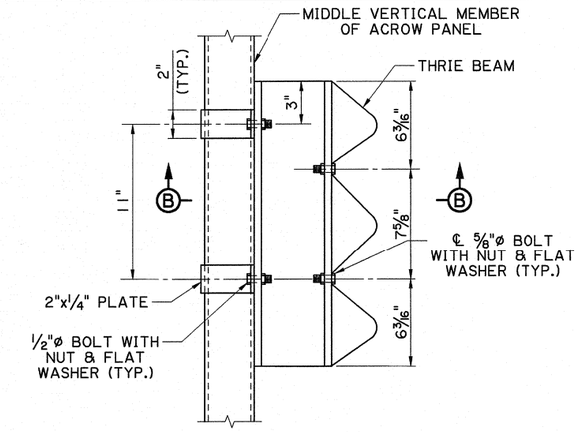

SECTION A-A

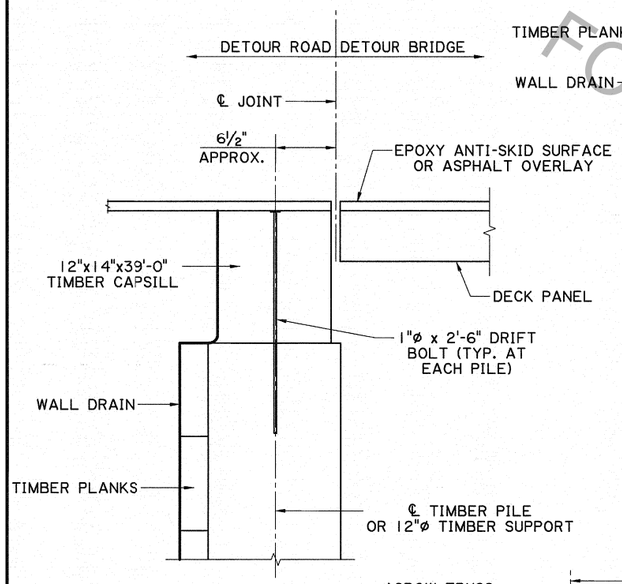

DETAIL "C"

NOTES:

THE BACKSIDE OF BULKHEAD SHALL BE LINED WITH A WALLDRAIN (SEE LA. D.O.T.D. QPL NO. 62B). WALLDRAIN TO BE TACKED TO TIMBER PLANKS AND ALL JOINTS ARE TO BE OVERLAPPED A MINIMUM OF 12".

3"x10" TIMBER PLANKS AND TIMBER CAPSILL SHALL BE SPLICED AT THE PILES AND ALL SPLICES SHALL BE STAGGERED. 2-60d NAILS IN EACH PLANK ON EACH SIDE OF SPLICE.

⊠ WHEN "H" > 5'-0", PILES "A" THROUGH "F" REQUIRE A PAIR OF PILES WHICH HAVE A BATTERED PILE CONNECTION AS SHOWN.

△ ELASTOMERIC PAD SHALL BE INSTALLED PRIOR TO PLACING STRAP AROUND VERTICAL TRUSS MEMBER AND PRIOR TO BOLTING STRAP TO W 6x15.

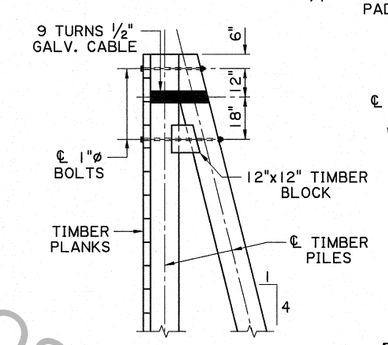

BULKHEAD PILE BATTER DETAIL⊠

SECTION VIEW

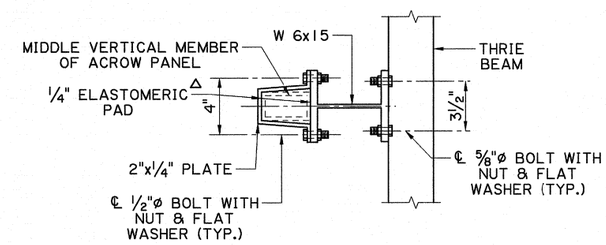

SECTION B-B

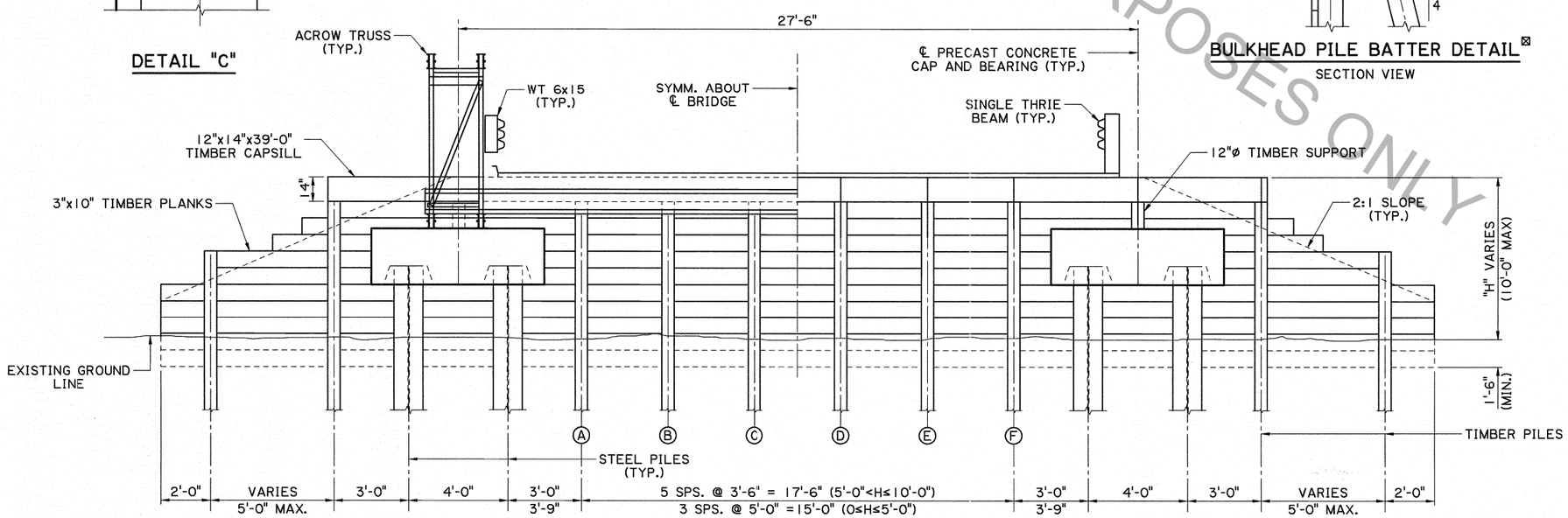

HALF SECTION C-C

HALF SECTION D-D

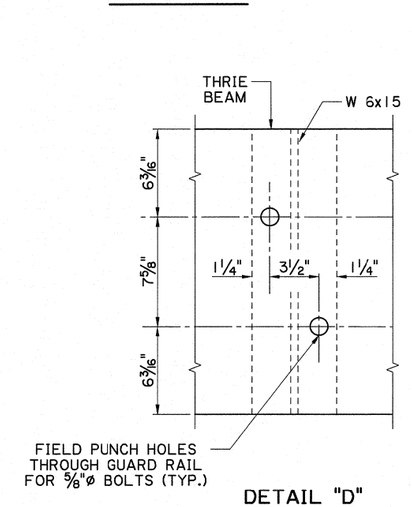

DETAIL "D"

ATTACHMENT OF GUARD RAIL TO TRUSS MEMBER

STATE OF LOUISIANA
JUSTIN C. PELTIER
License No. 34765
PROFESSIONAL ENGINEER IN CIVIL ENGINEERING
8/25/2015

FOR INFORMATIONAL PURPOSES ONLY

SHEET NUMBER	PARISH	CONTROL SECTION	STATE PROJECT

DESIGNED J. PELTIER
CHECKED M. HEBERT
DETAILED J. PELTIER
CHECKED M. HEBERT
REVIEWED K. BRAUNER
SERIES # 7 OF 13

NO.	DATE	REVISION OR CHANGE ORDER DESCRIPTION	BY

STATE OF LOUISIANA DEPARTMENT OF TRANSPORTATION AND DEVELOPMENT

BRIDGE & STRUCTURAL DESIGN

BULKHEAD AND GUARD RAIL DETAILS

BD.2.8.2.0.07 STEEL PANEL DETOUR BRIDGE