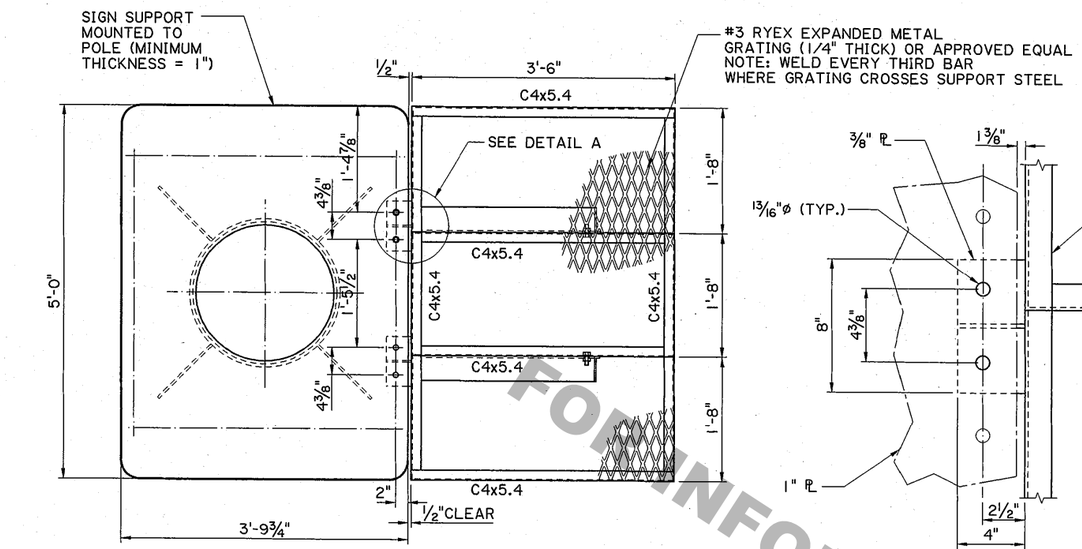

MANUFACTURER IS RESPONSIBLE FOR THE CONNECTION BETWEEN THE DMS ENCLOSURE AND THE SUPPORT POST.

PLAN

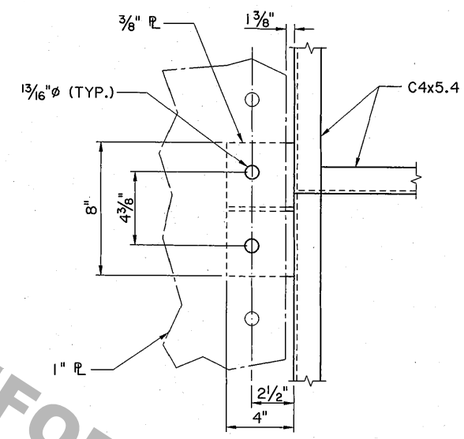

DETAIL A

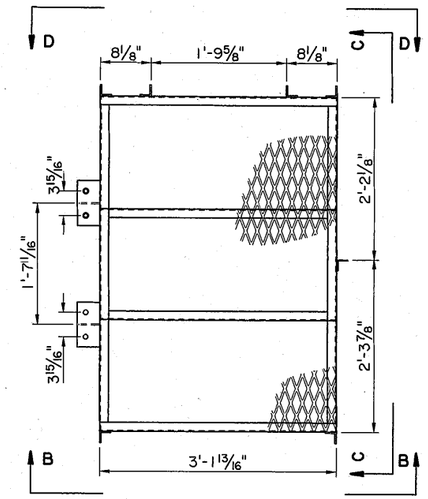

PLATFORM HANDRAIL LAYOUT

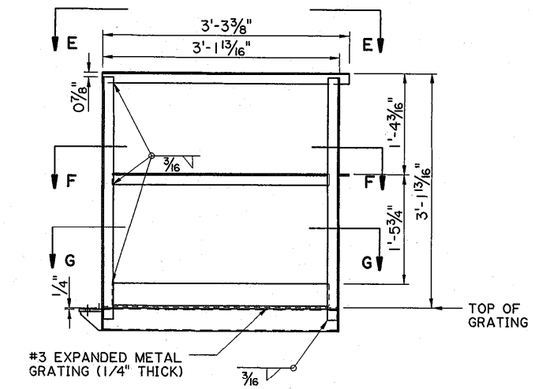

SECTION B-B

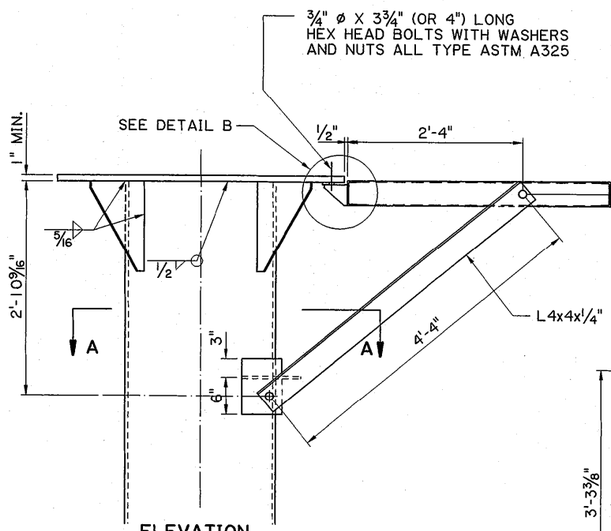

ELEVATION

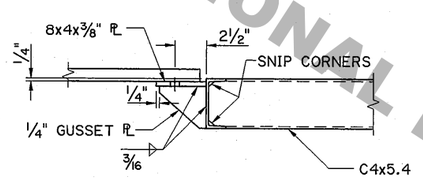

DETAIL B

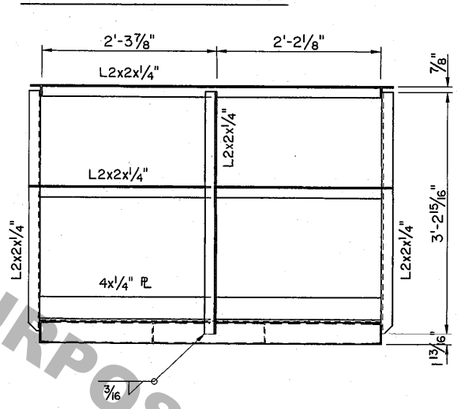

SECTION C-C

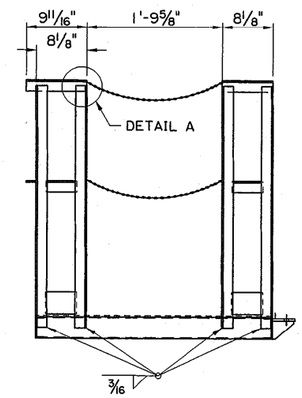

SECTION D-D

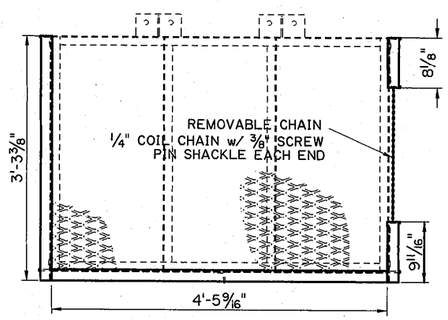

SECTION E-E

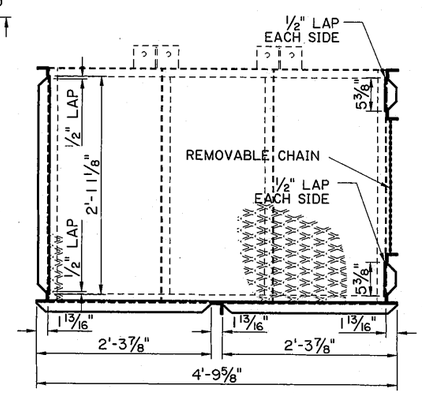

SECTION F-F

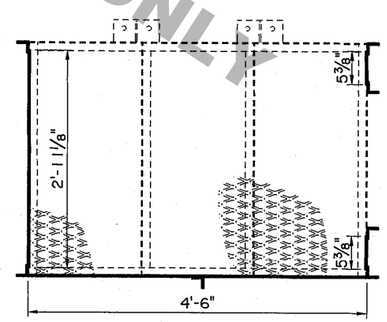

SECTION G-G

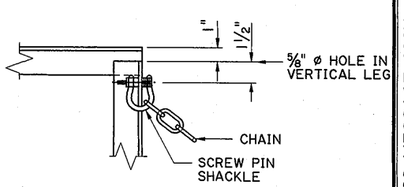

DETAIL C

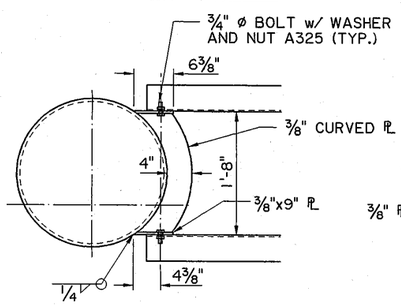

SECTION A-A

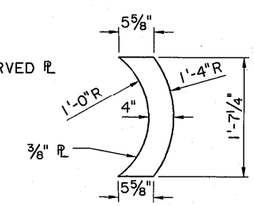

CURVED PLATE

STATE OF LOUISIANA
JACOB A. PARKER
REG. No. 30596
REGISTERED PROFESSIONAL ENGINEER IN CIVIL ENGINEERING

10-04-04

FOR INFORMATIONAL PURPOSES ONLY

SHEET NUMBER	
PARISH	
FEDERAL PROJECT	
STATE PROJECT	
DESIGNED M. ORDOGNE	
CHECKED J. PARKER	
DETAILED M. ORDOGNE	
CHECKED J. PARKER	
DATE OCT. 2004	
SHEET 2 OF 2	

NO.	DATE	REVISION DESCRIPTION	BY

DYNAMIC MESSAGE SIGN

STANDARD DETAILS | MAINTENANCE PLATFORM

BRIDGE AND STRUCTURAL DESIGN