12/3/2014 08:57

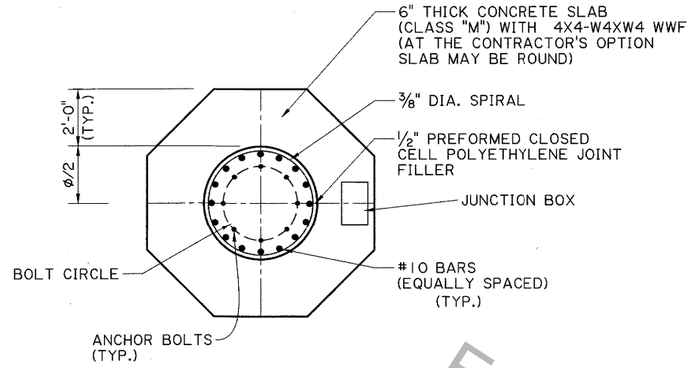

A TYPICAL SECTION AT B-B

(NOT TO SCALE)

MAXIMUM DESIGN LOADS FROM LUMINAIRE & LOWERING DEVICE		
NO. OF LUMINAIRES	EFFECTIVE PROJECTED AREA (EPA)	WEIGHT
6	20 SQUARE FEET	800 POUNDS
8	25 SQUARE FEET	900 POUNDS
12	35 SQUARE FEET	1000 POUNDS

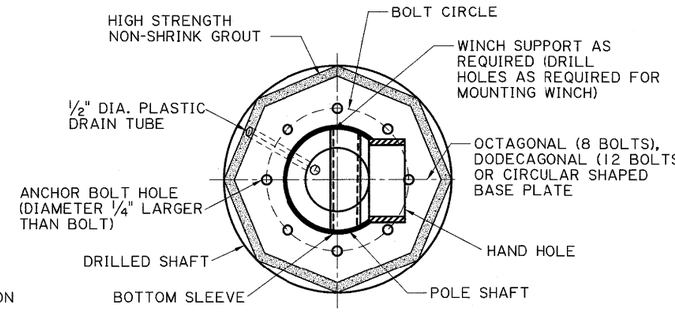

A TYPICAL SECTION AT C-C

(NOT TO SCALE)

MINIMUM FOOTING SIZE FOR DIFFERENT WIND SPEEDS									
POLE HEIGHT (FEET)	90 MPH POLE SHAPE				100 TO 110 MPH POLE SHAPE				120 TO 130 MPH POLE SHAPE
	8•	12△	16⊕	ROUND	8•	12△	16⊕	ROUND	ROUND
100	A	A	A	A	B	A	A	A	A
110	A	A	A	A	B	B	A	A	A
120	B	B	B	B	C	B	B	B	B
130	B	B	B	B	C	B	B	B	B
140	-	B	B	B	-	C	B	B	-
150	-	B	B	B	-	C	B	B	-

• - EIGHT SIDED △ - TWELVE SIDED ⊕ SIXTEEN SIDED

A = 4'-0" DIAMETER DRILLED SHAFT
B = 4'-6" DIAMETER DRILLED SHAFT
C = 5'-0" DIAMETER DRILLED SHAFT

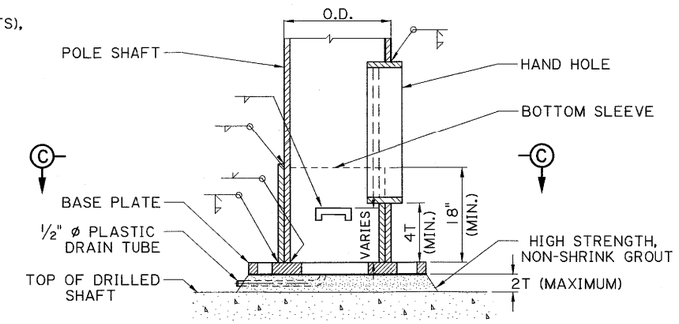

A TYPICAL SECTION AT POLE BASE

(NOT TO SCALE)

T = THICKNESS OF HEX NUT

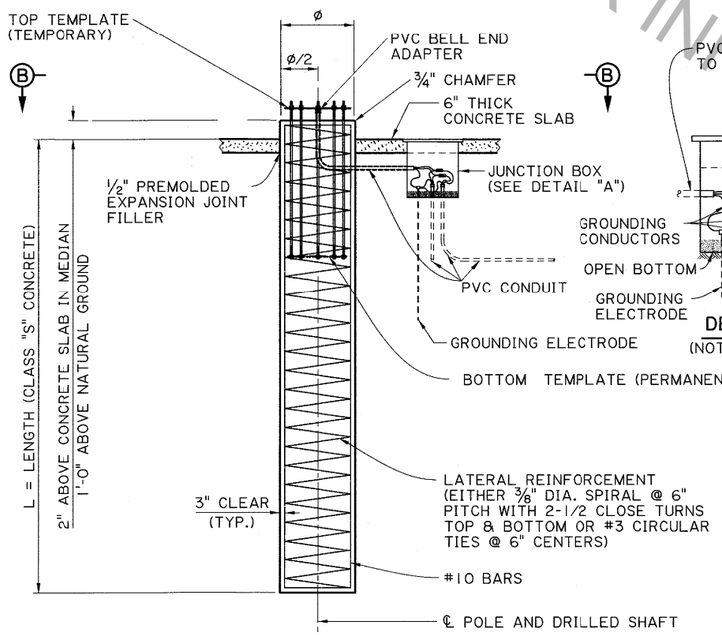

DRILLED SHAFT

(NOT TO SCALE)

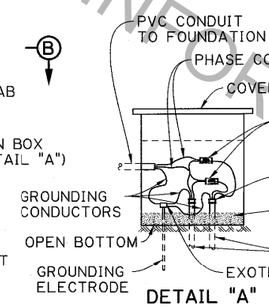

DETAIL "A"

(NOT TO SCALE)

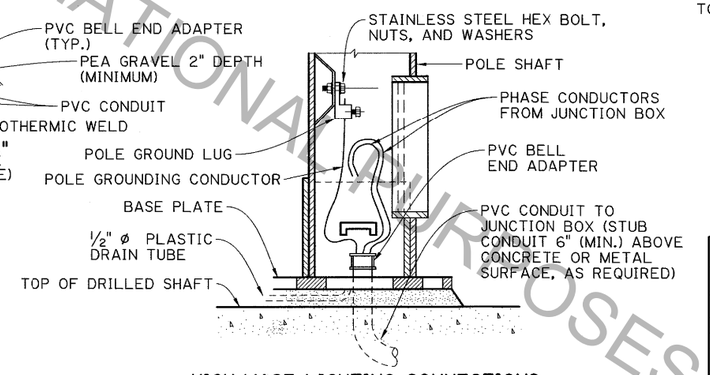

HIGH-MAST LIGHTING CONNECTIONS

(NOT TO SCALE)

NOTES :

SPIRAL BARS MAY BE SPLICED 1 1/2 TURNS MINIMUM, AS REQUIRED.

THE SPLICE LOCATIONS FOR BOTH SPIRAL BARS AND #3 CIRCULAR TIES SHALL BE ALTERNATED.

GROUNDING MATERIAL AND THE CONDUIT WITHIN DRILLED SHAFT SHALL BE PAID FOR UNDER ITEM 730-06-XXXXX ✡. JUNCTION BOX AND OTHER ELECTRICAL EQUIPMENT SHALL BE PAID FOR UNDER OTHER PAY ITEMS (SEE PLANS).

ESTIMATED QUANTITIES PAID FOR UNDER ITEM 730-06-XXXXX✡				
FOOTING TYPE		A	B	C
DRILLED SHAFT	Ø (SHAFT DIAMETER) (FEET)	4.0	4.5	5.0
	NO. OF #10 BARS	15	18	23
	LENGTH, L (FEET) — WIND 90 MPH	25	30	35
	LENGTH, L (FEET) — WIND 100 TO 110 MPH	25	30	35
	LENGTH, L (FEET) — WIND 120 TO 130 MPH	40	40	40
	WIND 90 TO 110 MPH: REINFORCING STEEL (LB)	1876	2672	3916
	WIND 120 TO 130 MPH: REINFORCING STEEL (LB)	2967	3541	4665
	WIND 90 TO 110 MPH: CLASS S CONCRETE (CU.YD.)	12.10	18.26	26.18
	WIND 120 TO 130 MPH: CLASS S CONCRETE (CU.YD.)	19.10	24.19	29.82
	CLASS M CONCRETE (CU.YD.)⊖	0.70	0.76	0.81

⊖ 6" APRON SLAB

✡ REFER TO SECTION 730 OF LADOTD STANDARD SPECIFICATIONS FOR ROADS AND BRIDGES, 2006.

MINIMUM ANCHOR BOLT NUMBER & DIAMETER (INCHES)																		
POLE HEIGHT (FEET)	WIND 90 MPH POLE SHAPE								WIND 100 TO 110 MPH POLE SHAPE								WIND 120 TO 130 MPH POLE SHAPE	
	8•		12△		16⊕		ROUND		8•		12△		16⊕		ROUND		ROUND	
	NO.	DIA.	NO.	DIA.	NO.	DIA.	NO.	NO.	NO.	DIA.	NO.	DIA.	NO.	DIA.	NO.	DIA.	NO.	DIA.
100	8	1 3/4	8	1 3/4	8	1 3/4	8	1 3/4	8	1 3/4	8	1 3/4	8	1 3/4	8	1 3/4	8	1 3/4
110	8	1 3/4	8	1 3/4	8	1 3/4	8	1 3/4	8	1 3/4	8	1 3/4	8	1 3/4	8	1 3/4	8	1 3/4
120	8	1 3/4	8	1 3/4	8	1 3/4	8	1 3/4	8	1 3/4	8	1 3/4	8	1 3/4	8	1 3/4	8	1 3/4
130	8	1 3/4	8	1 3/4	8	1 3/4	8	1 3/4	12	1 3/4	8	1 3/4	8	1 3/4	8	1 3/4	8	1 3/4
140	-	-	8	1 3/4	8	1 3/4	8	1 3/4	-	-	8	1 3/4	8	1 3/4	8	1 3/4	-	-
150	-	-	8	1 3/4	8	1 3/4	8	1 3/4	-	-	12	1 3/4	8	1 3/4	8	1 3/4	-	-

NOTE: DIA.- DIAMETER , NO.- NUMBER

• - EIGHT SIDED △ - TWELVE SIDED ⊕ - SIXTEEN SIDED

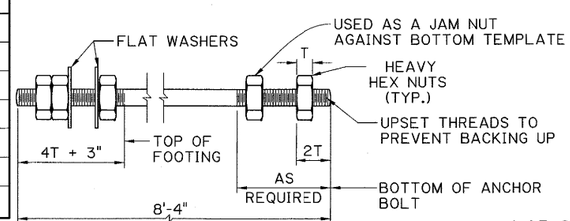

ANCHOR BOLT

(NOT TO SCALE)

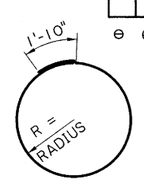

LAP SPLICE FOR # 3 CIRCULAR TIES

(NOT TO SCALE)

STATE OF LOUISIANA CHING TSAI REG. NO. 23092 REGISTERED PROFESSIONAL ENGINEER IN CIVIL ENGINEERING
11/26/2014

STATE OF LOUISIANA ANANDA H. HERATH License No. 29042 PROFESSIONAL ENGINEER IN CIVIL ENGINEERING
11/26/2014

FOR INFORMATIONAL PURPOSES ONLY

SHEET NUMBER

PARISH | CONTROL SECTION | STATE PROJECT

DESIGNED A. HERATH | CHECKED V. TOURRES | DETAILED J. KOEMPEL | CHECKED A. HERATH | REVIEWED K. BRAUNER | SERIES # 2 OF 2

NO. | DATE | REVISION OR CHANGE ORDER DESCRIPTION | BY

ANCHOR BOLTS, FOOTING, AND JUNCTION BOX

BD.2.7.4.0.02 - HIGH-MAST LIGHTING

BRIDGE AND STRUCTURAL DESIGN

IP_PWP:dms55699\BD.2.7.4.0.02-High-mast Lighting-2.dgn