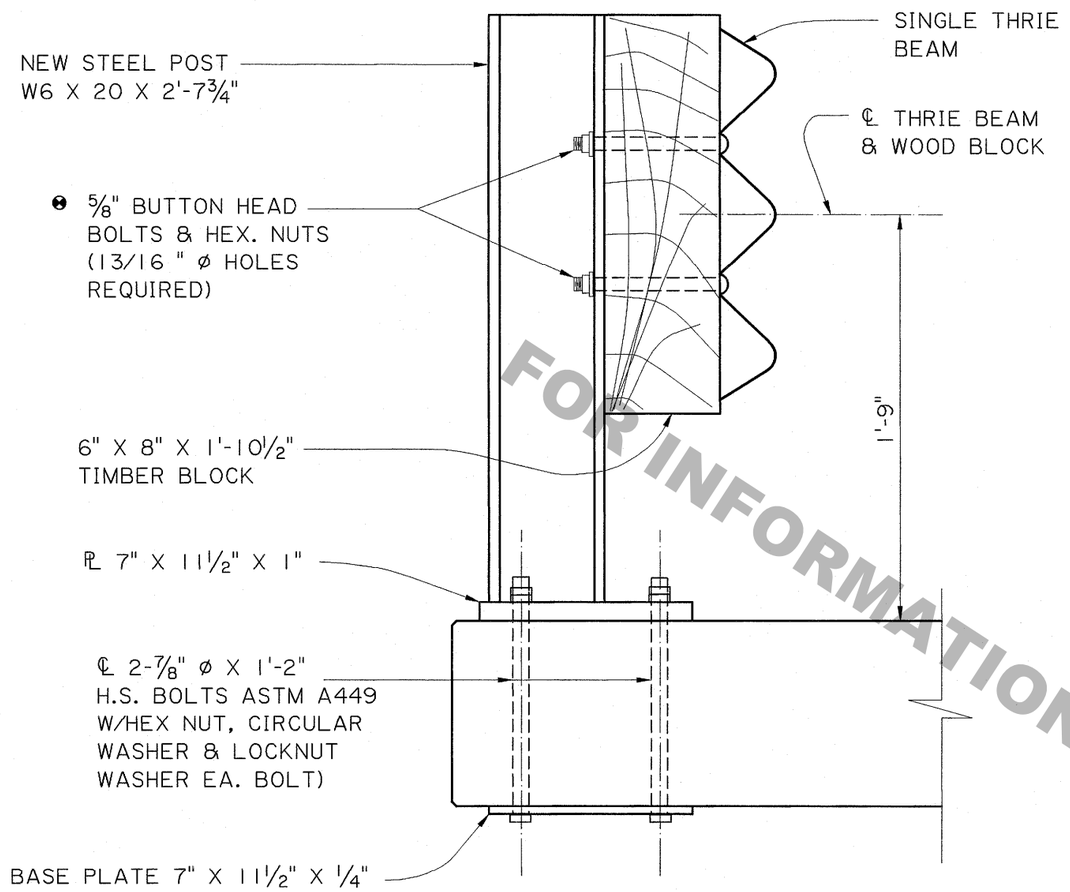

TYPICAL BRIDGE CROSS SECTION

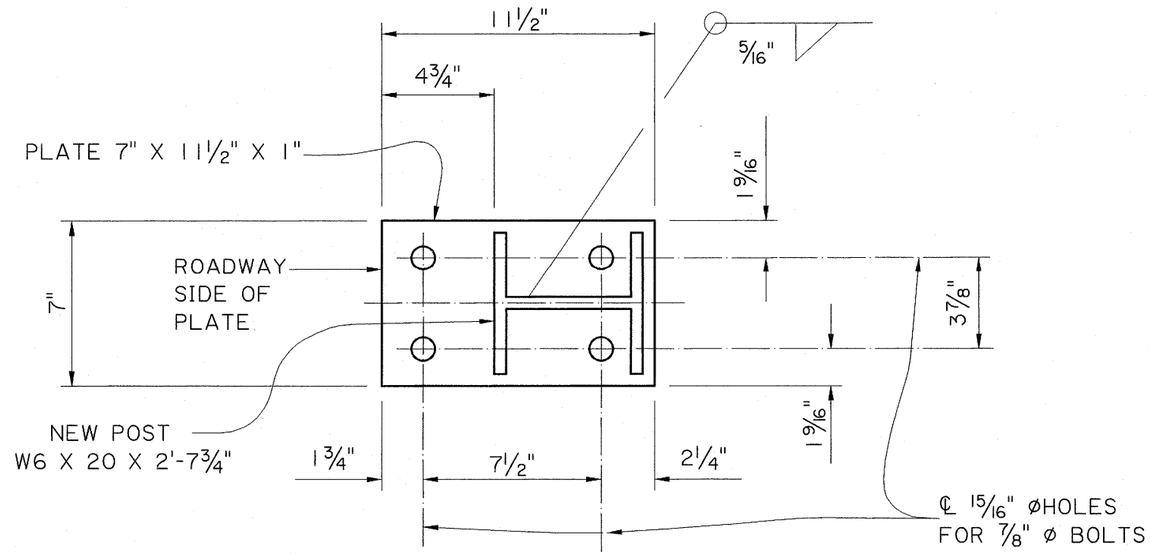

BASE PLATE FOR POST ASSEMBLY

THE 7" x 11½" x ¼" BOTTOM PLATE SHALL HAVE THE SAME BOLT HOLE LAYOUT.

NOTES

ALL HARDWARE INVOLVED SHALL BE REPLACED BY NEW HARDWARE.

FOR ADDITIONAL INFORMATION ON GUARD RAIL, SEE STD. PLAN GR-200.

ALL STRUCTURAL STEEL SHALL BE ASTM A-36 AND GALVANIZED. ALL ⅝"ø BOLTS SHALL BE ASTM A307.

⊗ THE BOLTS IN THE GUARD RAIL SHALL BE LOCATED ON THE ONCOMING FLANGE TRAFFIC SIDE.

ALTHOUGH ITEM 704-01-01020 CALLS FOR 6'-3" MAX. POST SPACING, THE NEW POST FOR EXISTING PRECAST BRIDGES SHALL BE INSTALLED AT THE SAME LOCATION AS THE OLD ONES. ALL GUARD RAIL SPLICES SHALL BE MADE AT POST LOCATIONS ONLY.

ALL WORK AND MATERIALS REQUIRED TO INSTALL THE NEW GUARD RAIL SHALL BE PAID FOR UNDER ITEM 704-01-01020 GUARD RAIL (SINGLE THRIE BEAM) (6'-3" POST SPA.) PER LIN. FT.

FOR INFORMATIONAL PURPOSES ONLY

STATE OF LOUISIANA
PAUL B. FOSSIER, JR.
REG. No. 21028
REGISTERED PROFESSIONAL ENGINEER IN CIVIL ENGINEERING
4-9-09

SHEET NUMBER

PARISH | FEDERAL PROJECT | STATE PROJECT

DESIGNED | CHECKED | DETAILED J.BENTON | CHECKED P. FOSSIER. | DATE 12-2008 | SHEET | BY

NO. | DATE | REVISION DESCRIPTION

GUARD RAIL REHABILITATION
FLAT DECK PRECAST BRIDGES

BRIDGE AND STRUCTURAL DESIGN