NOTE: 25'-0" SECTION OF GUARD RAIL (WITH NO SPLICE) SHALL BE INSTALLED SYMETRICALLY WITH RESPECT TO THE FIRST POST ON EACH END OF THE STRUCTURE.

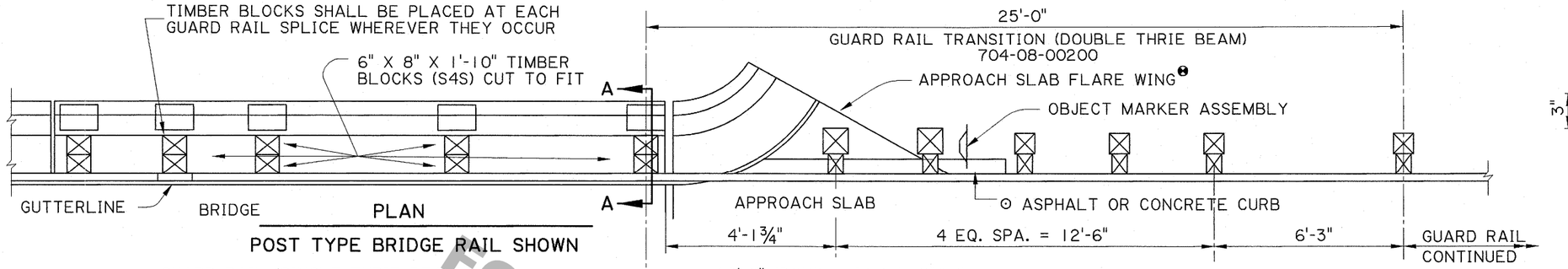

PLAN

POST TYPE BRIDGE RAIL SHOWN

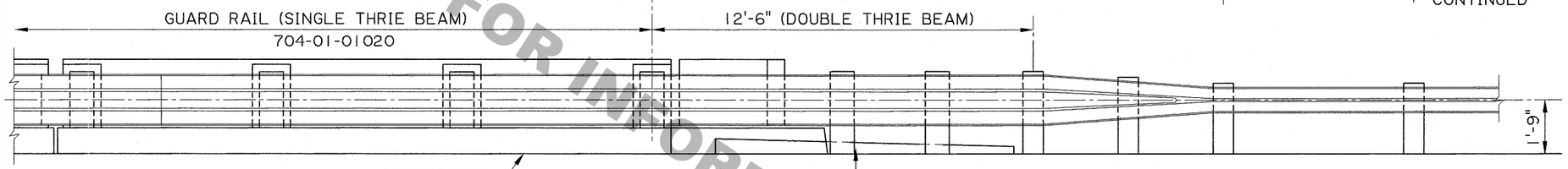

ELEVATION

POST TYPE BRIDGE RAIL SHOWN

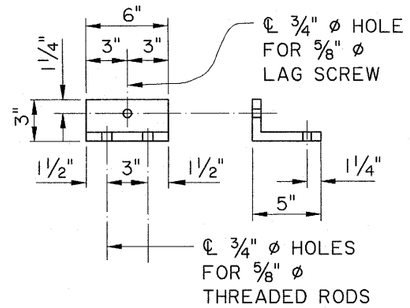

(MOUNT TO TOP OF RAIL FOR BLOCK BACKUP) THE HOLES MAY BE OFFSET TO ACHIEVE INSTALLATION BUT THE 1½" EDGE DISTANCE SHALL BE MAINTAINED.

SUPPORT ANGLE

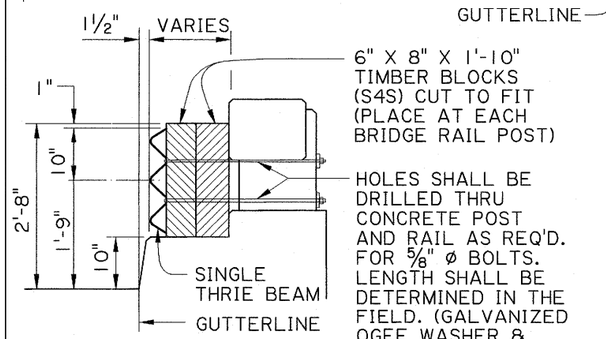

SECTION A-A

POST AND RAIL BRIDGE RAIL

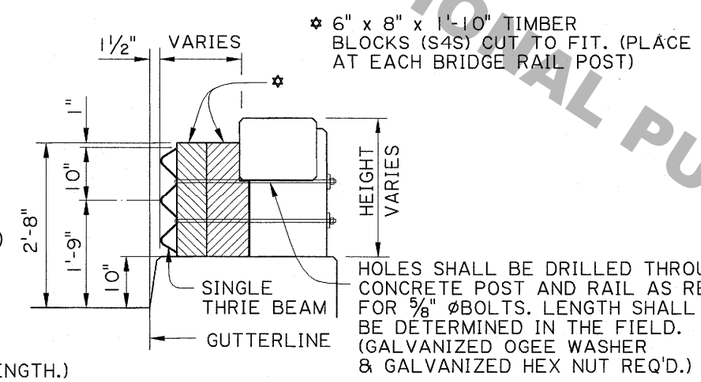

SECTION A-A

POST AND RAIL BRIDGE RAIL

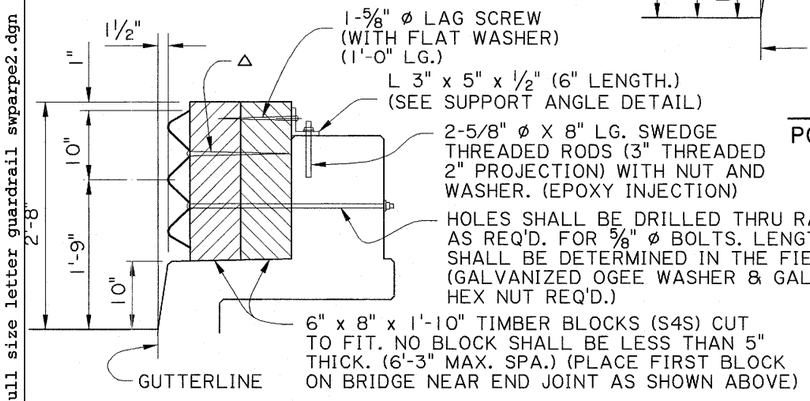

⅝" ø LAG SCREW (WITH PLATE WASHER) SHALL PENETRATE TO THE BACK OF THE REAR BLOCK (LENGTH TO BE DETERMINED IN THE FIELD)

SECTION A-A

SOLID WALL RAILING

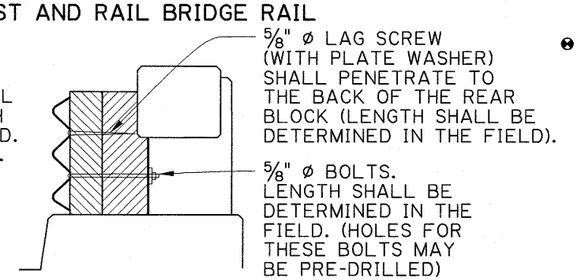

VIEW AT GUARD RAIL SPLICES

NOTES:

FOR ADDITIONAL INFORMATION ON GUARD RAIL, SEE STD. PLAN GR-200.

ALL MATERIALS AND LABOR REQ'D. TO PLACE THE GUARD RAIL THRU THE BRIDGE SHALL BE PAID FOR UNDER ITEM 704-01-01020

⊙ FOR CURB & TRANSITION INFORMATION, SEE SHEET 3 OF 10, GR-200.

IF THE EXISTING CONCRETE IS DAMAGED DUE TO DRILLING HOLES FOR BOLTS AND RODS, THE CONTRACTOR SHALL REPAIR THE DAMAGE WITH THE APPROPRIATE MATERIALS AT HIS EXPENSE AND TO THE SATISFACTION OF THE PROJECT ENGINEER

EXISTING HANDRAIL SHALL BE REMOVED AND DISPOSED OF BY THE CONTRACTOR AS DIRECTED BY THE PROJECT ENGINEER.

ALL HOLES (VERTICAL OR HORIZONTAL) DRILLED INTO AN EXISTING CONRETE STRUCTURE SHALL BE ¾" IN DIA. THEY SHALL BE CLEANED WITH WITH COMPRESSED AIR AND MADE FREE OF ANY OIL OR RESIDUE. HOLES SHALL BE FILLED WITH EPOXY INJECTION SYSTEM AS LISTED ON QPL 40. PLACE ROD IN HOLE IMMEDIATELY AND WAIT FOR THE MANUFACTURERS CURE TIME.

THE LOWER BOLTS IN THE GUARD RAIL AT EACH POST SHALL BE ON THE ONCOMING TRAFFIC SIDE.

IF TIMBER BLOCKS ARE LESS THAN 3" ABOVE THE CONCRETE RAIL IN THE SOLID RAIL ALTERNATE, THE METHOD SHOWN IN THE POST AND RAIL BRIDGE RAIL ALTERNATE SHALL BE UTILIZED.

THE LENGTHS OF THE LAG SCREWS SHALL BE VERIFIED BY THE PROJECT ENGINEER BEFORE INSTALLATION TO ACHIEVE THE PENETRATION CALLED FOR IN THE SOLID WALL ALTERNATE.

❸ IF APPROACH SLAB FLARES EXIST, A 1'-0" X 1'-0" HOLE SHALL BE CUT THRU THE CONCRETE IN THE PROPER LOCATION TO INSTALL POST. AFTER POST IS IN PLACE, COMPACT SOIL AROUND POST AND REDRESS THE SLAB WITH CONCRETE TO THE FINISHED ELEVATION. (NO DIRECT PAY).

ALL ⅝"ø BOLTS SHALL BE ASTM A307.

STATE OF LOUISIANA
PAUL B. FOSSIER, JR.
REG. No. 21028
REGISTERED PROFESSIONAL ENGINEER IN CIVIL ENGINEERING
4-9-09

FOR INFORMATIONAL PURPOSES ONLY

SHEET NUMBER	PARISH	FEDERAL PROJECT	STATE PROJECT

DESIGNED / CHECKED — DETAILED / CHECKED: J. BENTON / P. FOSSIER — DATE: 12-2008 — SHEET

NO. | DATE | REVISION DESCRIPTION | BY

GUARD RAIL
CONTINUOUS ACCROSS
BRUSH CURB BRIDGE RAIL

TIMBER POST OPTION

BRIDGE AND STRUCTURAL DESIGN

11-AUG-2009 12:51
IP_PWP:dms55670\full size letter guardrail swparpe2.dgn