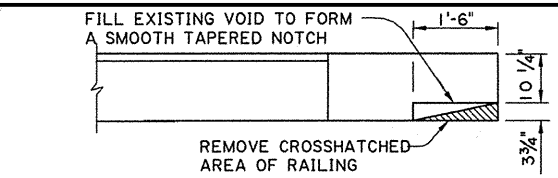

EXISTING PLAN

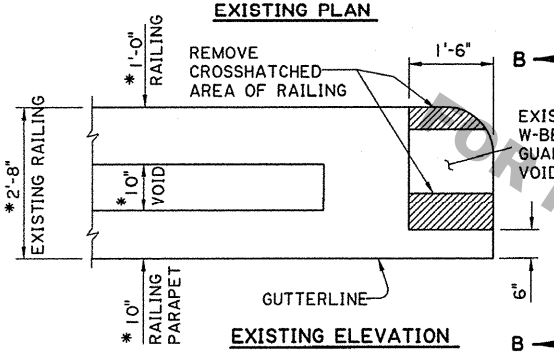

EXISTING ELEVATION

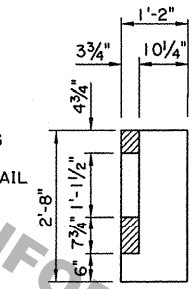

VIEW B-B

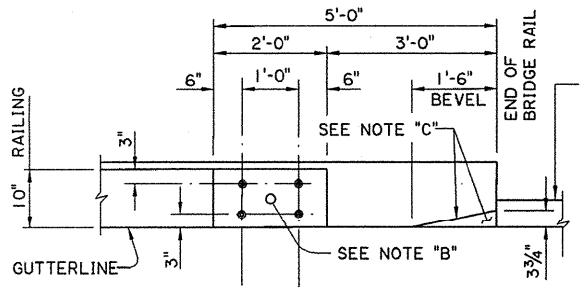

NEW PLAN

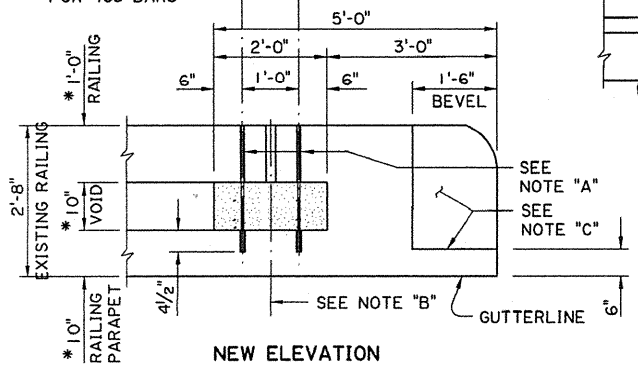

NEW ELEVATION

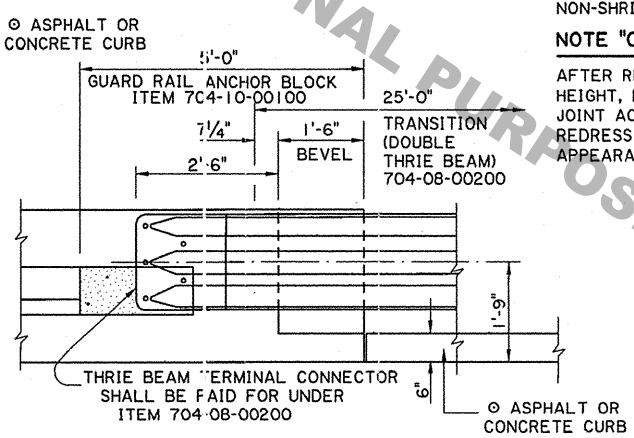

NEW ELEVATION SHOWING
GUARD RAIL ATTACHMENT

GENERAL NOTES

FOR ADDITIONAL INFORMATION ON GUARD RAILS, SEE STANDARD PLAN GR 200.

* THESE DIMENSIONS MAY VARY. THE NON-SHRINK GROUT QUANTITY AND 403 BAR LENGTH SHALL BE ADJUSTED ACCORDINGLY.

ALL DIMENSIONS SHALL BE VERIFIED IN THE FIELD BY THE CONTRACTOR AND APPROVED BY THE PROJECT ENGINEER AT NO DIRECT PAY.

⊙ FOR CURB & TRANSITION, SEE SHEET 3 OF 10, GR-200.

GUARD RAIL ANCHOR BLOCKS

ALL WORK AND MATERIALS REQUIRED TO MODIFY EXISTING RAILING SHALL BE PAID FOR UNDER: GUARD RAIL ANCHOR BLOCK, PER EACH, ITEM 704-10-00100.

NOTE "A"

DRILL 3/4" ø HOLES THRU THE RAILING AND INTO THE RAILING PARAPET AS SHOWN. CLEAN HOLES WITH COMPRESSED AIR TO REMOVE ALL OIL AND RESIDUE. FILL HOLES WITH EITHER AN INJECTION OR RESIN CONCRETE ANCHOR SYSTEM LISTED ON QPL 40. PLACE 403 BARS (2'-2" LG.) IN HOLES AND WAIT THE MANUFACTURERS CURE TIME BEFORE POURING NEW CONCRETE.

NOTE "B"

DRILL A 2" ø HOLE THRU THE DEPTH OF RAILING. FILL VOID BETWEEN RAILING AND RAILING PARAPET THRU THE 2" ø HOLE WITH AN APPROVED FLOWABLE NON-SHRINK GROUT LISTED ON QPL 47.

NOTE "C"

AFTER REMOVING THE EXISTING CONCRETE TO CONSTRUCT THE 1'-6" BEVEL FULL HEIGHT, PREPARE THE VERTICAL SURFACE OF THE EXISTING VOID FOR AN EPOXY RESIN JOINT ACCORDING TO SUBSECTION 805.06(b)(2) AND PLACE CONCRETE IN VOID. REDRESS AND FORM THE ENTIRE SURFACE OF THE BEVEL TO GIVE A SMOOTH APPEARANCE BY USING A FLOWABLE NON-SHRINK GROUT LISTED ON QPL 47.

FOR INFORMATIONAL PURPOSES ONLY

STATE OF LOUISIANA
PAUL B. FOSSIER, JR.
REG. No. 21028
REGISTERED
PROFESSIONAL ENGINEER
IN
CIVIL ENGINEERING

Paul B. Fossier Jr.
4/9/09

BRIDGE AND STRUCTURAL DESIGN

DOTD

GUARD RAIL ANCHOR BLOCK REHABILITATION FOR CONCRETE POST & RAIL

STANDARD DETAIL (ALTERNATE 11)

NO.	DATE	REVISION DESCRIPTION	BY

DESIGNED		PARISH	
CHECKED			
DETAILED	J. BENTON	FEDERAL	
CHECKED	P. FOSSIER	PROJECT	
DATE	12-2008	STATE	
SHEET		PROJECT	

SHEET NUMBER