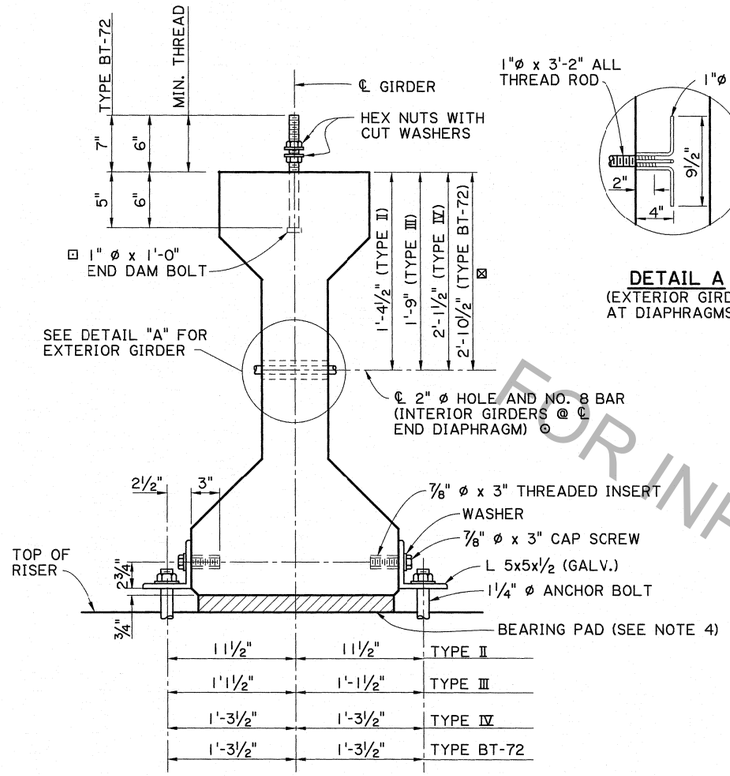

TYPICAL GIRDER END VIEW *

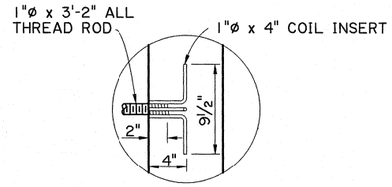

DETAIL A
(EXTERIOR GIRDER AT DIAPHRAGMS)

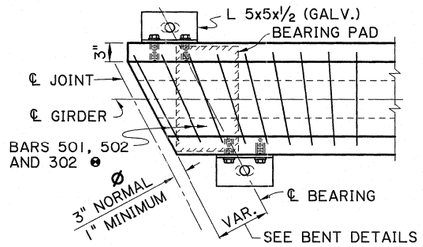

SKEW JOINT AT END AND TRANSITION BENTS *

(DETAILS NOT SHOWN SIMILAR TO DETAILS SHOWN RIGHT)

❶ MINIMUM LAP SPLICE OF 15" ON 302 BARS WILL REQUIRE ADJUSTMENT TO STANDARD BAR DIMENSIONS IN HIGH SKEW ENDS.

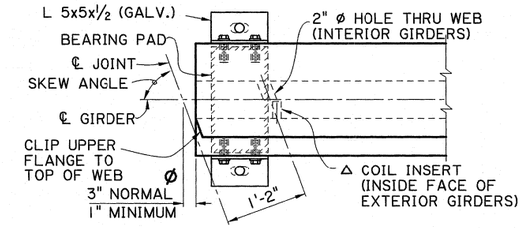

SKEW JOINT AT INTERMEDIATE BENT *

△ SKEW THREADED INSERTS AT GIRDER ENDS ADJACENT TO END BENT WHEN SKEW ANGLE EXCEEDS 15° FROM NORMAL.

ø PERPENDICULAR TO ℄ JOINT.

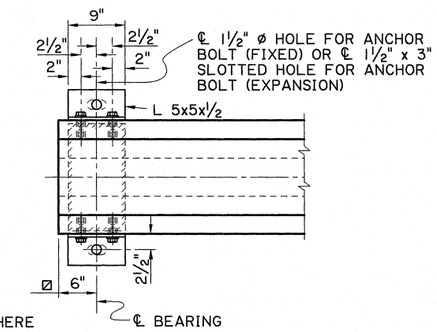

⊡ NOMINAL DIMENSION SHOWN. ACTUAL BEARING LOCATION TO BE AS SPECIFIED ELSEWHERE IN THE PLANS.

PART PLAN AT END OF GIRDER *

(SHOWING BEARING ANCHOR DETAILS)
(APPLIES ONLY TO GIRDERS TO BE ANCHORED AS SPECIFIED IN PLANS.)

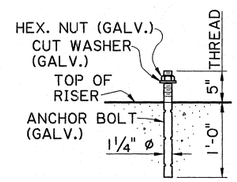

GIRDER ANCHOR BOLT

ANCHOR BOLTS TO BE SWEDGED, ASTM F1554, GRADE 36, GALV., UNLESS OTHERWISE NOTED, AND INCLUDED AS STRUCTURAL METALWORK IN BENT OR PIER QUANTITIES.

INSTALLING ANCHOR BOLTS BY DRILLING WILL NOT BE ALLOWED. ONE OF THE FOLLOWING ALTERNATES SHALL BE UTILIZED:

1) CAST ANCHOR BOLT IN PLACE WITH CAP.
2) PREFORM HOLE WITH A BLOCK-OUT AND THEN SET ANCHOR BOLT WITH A NON-SHRINK GROUT FROM QPL-47.

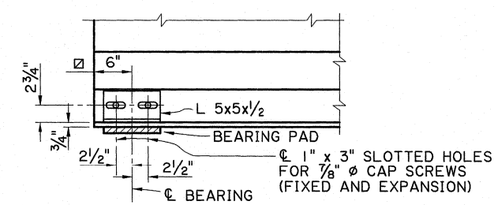

PART ELEVATION OF GIRDER END AT JOINT *

NOTES (GIRDER):

⊙ 2" ø HOLE (INTERIOR GIRDERS) AND 1" ø COIL INSERT (EXTERIOR GIRDERS) ARE REQUIRED AT ℄ INTERMEDIATE DIAPHRAGM FOR SPANS GREATER THAN 50' IN LENGTH.

⊠ THIS DIMENSION MAY BE ADJUSTED TO CLEAR DRAPED STRANDS WHEN NECESSARY AND IS TYPICAL FOR ALL GIRDERS REGARDLESS OF ROADWAY CROWN.

⊡ 2 BOLTS ARE REQUIRED FOR STRIP SEAL JOINTS. SEE STRIP SEAL JOINT DETAILS.

COIL INSERTS SHALL BE WILLIAMS TYPE C17-1x4 THIN SLAB LIFTING INSERT OR AN APPROVED EQUAL.

NOTE (PAY QUANTITIES):

MATERIALS TO BE INCLUDED IN PRICE BID PER LINEAR FOOT OF PRECAST-PRESTRESSED CONCRETE GIRDERS ARE LISTED ON SHEETS 4 & 5 OF 5.
MATERIALS TO BE INCLUDED UNDER STRUCTURAL METALWORK, PAY ITEM IN SPAN QUANTITIES ARE LISTED ON SHEET 1 OF 5.

NOTES (BEARING ASSEMBLY):

1) BEARING ASSEMBLY (ANGLES, CAP SCREWS, WASHERS, THREADED INSERTS, AND ANCHOR BOLTS), ARE REQUIRED ONLY ON GIRDER ENDS THAT ARE BELOW DECK JOINTS AND THAT ARE SPECIFIED IN THE PLANS TO BE ANCHORED. BEARING ASSEMBLY IS NOT REQUIRED AT FIXED ENDS OF CONTINUOUS SPAN GIRDERS. BEARING PADS ARE REQUIRED FOR ALL GIRDERS AND ARE TO BE SHIPPED FREE OF GIRDER.

2) WASHERS AND CAP SCREWS AT BEARING ASSEMBLY ARE TO BE GALVANIZED. AT THE CONTRACTOR'S OPTION, THREADED INSERTS AT BEARING ASSEMBLY MAY BE GALVANIZED OR ELECTROPLATED AND COVERED WITH GREASE.

3) ALL STEEL CLIP ANGLES SHALL BE HOT-DIPPED GALVANIZED IN ACCORDANCE WITH STANDARD SPECIFICATIONS.

4) ELASTOMIC PADS & STEEL-REINFORCED ELASTOMERIC BEARING PADS ARE TO BE AS SPECIFIED IN THE PLANS AND SPECIFICATIONS, AND SHALL BE PROVIDED AT END OF ALL GIRDERS UNLESS AN ALTERNATE TYPE OF BEARING IS SPECIFICALLY PROVIDED. IF NO BEARING PAD DETAIL IS PROVIDED IN THE PLANS, THE SIZE, THICKNESS OF ELASTOMER LAYERS, STEEL SHIM PLATES, AND PROPERTIES OF ELASTOMER SHALL BE AS SPECIFIED BY THE ENGINEER. IN ALL CASES, ALL COSTS ASSOCIATED WITH THE MANUFACTURE, TESTING, SHIPPING, AND PLACEMENT OF BEARINGS ARE TO BE INCLUDED IN THE PRICE BID FOR CONCRETE GIRDERS. NO ADDITIONAL COMPENSATION WILL BE MADE FOR PROJECTS IN WHICH THE BEARING PADS ARE AS SPECIFIED BY THE ENGINEER.

STATE OF LOUISIANA
JENAN NAKHLEH
REG. No. 18692
REGISTERED PROFESSIONAL ENGINEER IN CIVIL ENGINEERING
Jenan Nakhleh
9/4/2012

*** GIRDER TYPE II - IV SHOWN. GIRDER TTYPE BT-72 SIMILAR EXCEPT AS SHOWN.**

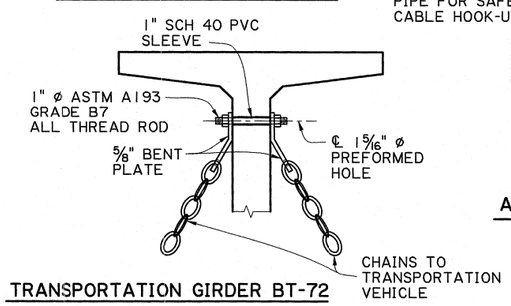

TRANSPORTATION GIRDER BT-72

1. FIELD DRILLING OF HOLES IS NOT PERMITTED.
2. NUMBER & LOCATION OF HOLES TO BE SHOWN ON SHOP DRAWINGS.
3. SUGGESTED METHOD SHOWN ABOVE. CONTRACTOR TO SUBMIT HIS METHOD FOR REVIEW & APPROVAL.

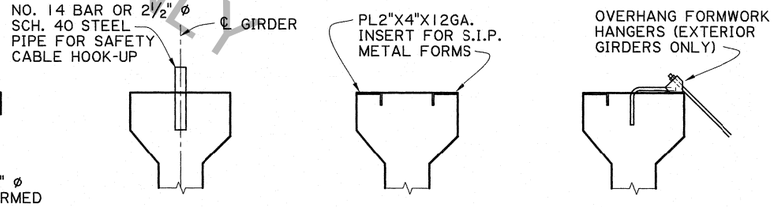

* ALL GIRDERS | * INTERIOR GIRDER | * EXTERIOR GIRDER

ELEVATION - TOP FLANGE SHOWING MISC. ATTACHMENTS

FOR INFORMATIONAL PURPOSES ONLY

SHEET NUMBER	PARISH	CONTROL SECTION	STATE PROJECT

DESIGNED / CHECKED — DETAILED / CHECKED: C. DELATOUR / J. NAKHLEH — SERIES NUMBER: 03-05-2001 3 OF 5

NO.	DATE	REVISION OR CHANGE ORDER DESCRIPTION	BY

STATE OF LOUISIANA DEPARTMENT OF TRANSPORTATION AND DEVELOPMENT

MISC. SPAN AND GIRDER DETAILS
(GIRDER HARDWARE AND BEARING PADS)

STANDARD DETAIL: MISC. SPAN AND GIRDER DETAILS

9/6/2012 09:3

IP_PWP:dms55670\msgspan3.dgn