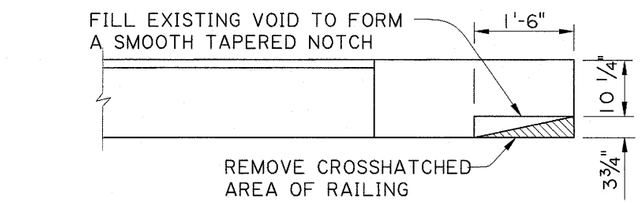

EXISTING PLAN

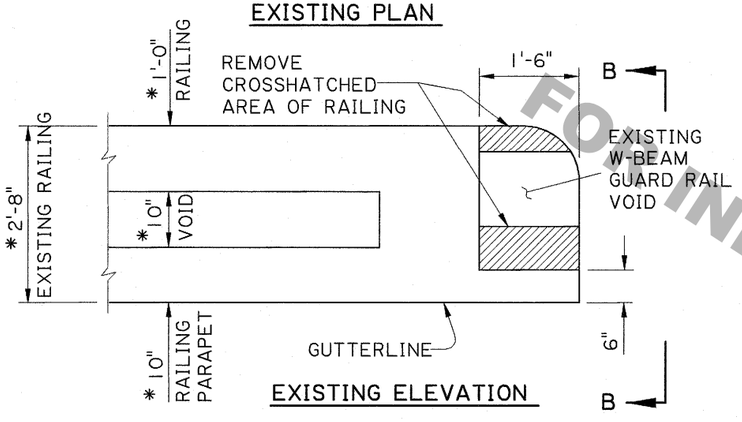

EXISTING ELEVATION

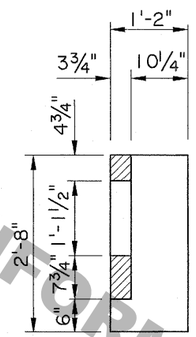

VIEW B-B

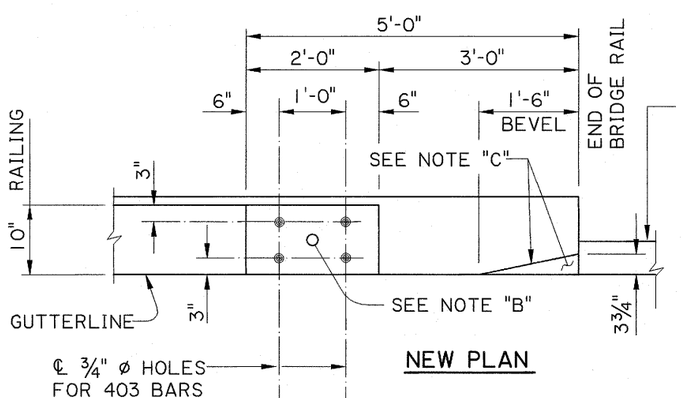

NEW PLAN

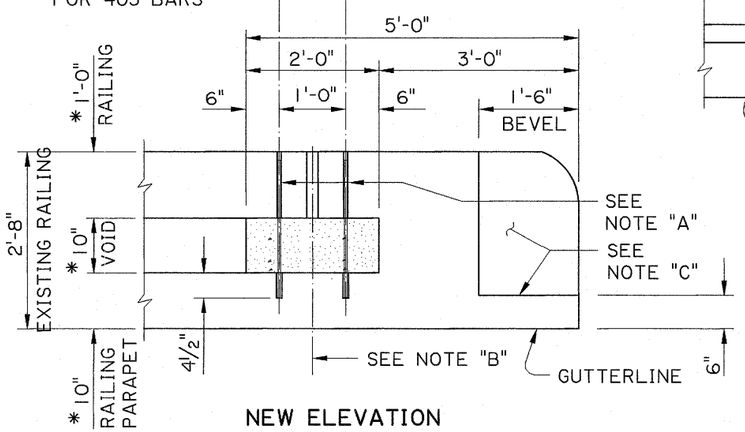

NEW ELEVATION

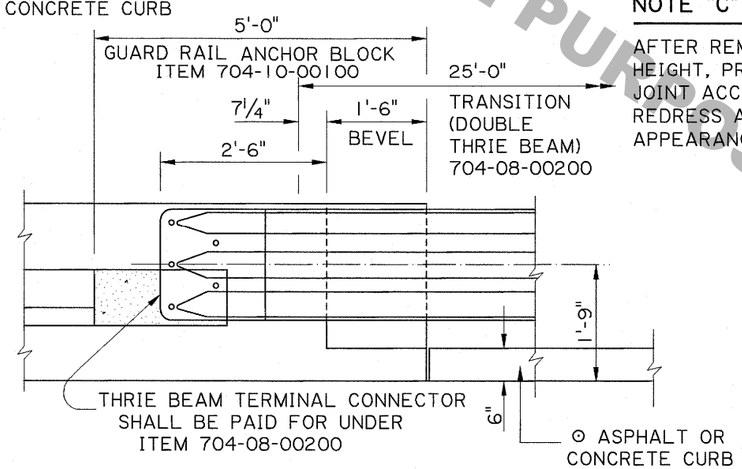

NEW ELEVATION SHOWING
GUARD RAIL ATTACHMENT

GENERAL NOTES

FOR ADDITIONAL INFORMATION ON GUARD RAILS, SEE STANDARD PLAN GR 200.

* THESE DIMENSIONS MAY VARY. THE NON-SHRINK GROUT QUANTITY AND 403 BAR LENGTH SHALL BE ADJUSTED ACCORDINGLY.

ALL DIMENSIONS SHALL BE VERIFIED IN THE FIELD BY THE CONTRACTOR AND APPROVED BY THE PROJECT ENGINEER AT NO DIRECT PAY.

⊙ FOR CURB & TRANSITION, SEE SHEET 3 OF 10, GR-200.

GUARD RAIL ANCHOR BLOCKS

ALL WORK AND MATERIALS REQUIRED TO MODIFY EXISTING RAILING SHALL BE PAID FOR UNDER: GUARD RAIL ANCHOR BLOCK, PER EACH, ITEM 704-10-00100.

NOTE "A"

DRILL 3/4" ø HOLES THRU THE RAILING AND INTO THE RAILING PARAPET AS SHOWN. CLEAN HOLES WITH COMPRESSED AIR TO REMOVE ALL OIL AND RESIDUE. FILL HOLES WITH EITHER AN INJECTION OR RESIN CONCRETE ANCHOR SYSTEM LISTED ON QPL 40. PLACE 403 BARS (2'-2" LG.) IN HOLES AND WAIT THE MANUFACTURERS CURE TIME BEFORE POURING NEW CONCRETE.

NOTE "B"

DRILL A 2" ø HOLE THRU THE DEPTH OF RAILING. FILL VOID BETWEEN RAILING AND RAILING PARAPET THRU THE 2" ø HOLE WITH AN APPROVED FLOWABLE NON-SHRINK GROUT LISTED ON QPL 47.

NOTE "C"

AFTER REMOVING THE EXISTING CONCRETE TO CONSTRUCT THE 1'-6" BEVEL FULL HEIGHT, PREPARE THE VERTICAL SURFACE OF THE EXISTING VOID FOR AN EPOXY RESIN JOINT ACCORDING TO SUBSECTION 805.06(b)(2) AND PLACE CONCRETE IN VOID. REDRESS AND FORM THE ENTIRE SURFACE OF THE BEVEL TO GIVE A SMOOTH APPEARANCE BY USING A FLOWABLE NON-SHRINK GROUT LISTED ON QPL 47.

STATE OF LOUISIANA
PAUL B. FOSSIER, JR.
REG. No. 21028
REGISTERED
PROFESSIONAL ENGINEER
IN
CIVIL ENGINEERING

4-9-09

FOR INFORMATIONAL PURPOSES ONLY

SHEET NUMBER			
PARISH		FEDERAL PROJECT	STATE PROJECT
DESIGNED		J.BENTON	
CHECKED		P. FOSSIER	
DETAILED			
CHECKED			
DATE		12-2008	
SHEET			

NO.	DATE	REVISION DESCRIPTION	BY

GUARD RAIL ANCHOR BLOCK
REHABILITATION FOR CONCRETE
POST & RAIL

ALTERNATE 11

BRIDGE AND
STRUCTURAL
DESIGN