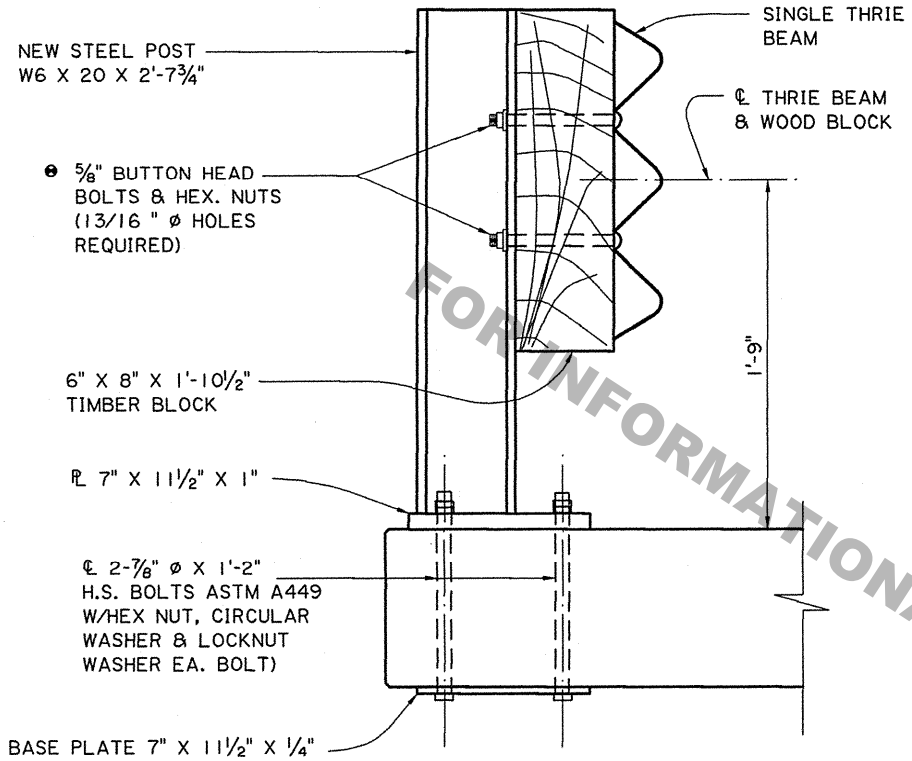

TYPICAL BRIDGE CROSS SECTION

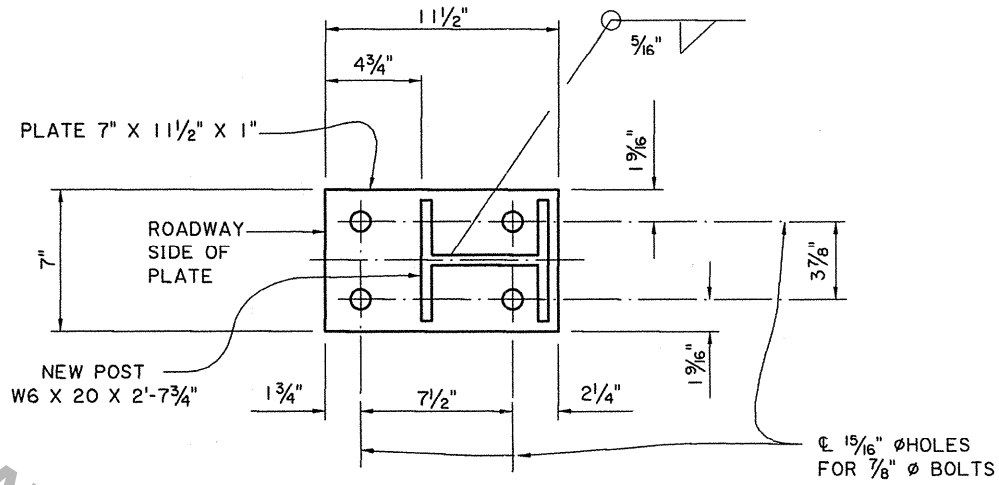

BASE PLATE FOR POST ASSEMBLY

THE 7" x 11½" x ¼" BOTTOM PLATE SHALL HAVE THE SAME BOLT HOLE LAYOUT.

FOR INFORMATIONAL PURPOSES ONLY

NOTES

ALL HARDWARE INVOLVED SHALL BE REPLACED BY NEW HARDWARE.

FOR ADDITIONAL INFORMATION ON GUARD RAIL, SEE STD. PLAN GR-200.

ALL STRUCTURAL STEEL SHALL BE ASTM A-36 AND GALVANIZED. ALL ⅝"ø BOLTS SHALL BE ASTM A307.

❶ THE BOLTS IN THE GUARD RAIL SHALL BE LOCATED ON THE ONCOMING FLANGE TRAFFIC SIDE.

ALTHOUGH ITEM 704-01-01020 CALLS FOR 6'-3" MAX. POST SPACING, THE NEW POST FOR EXISTING PRECAST BRIDGES SHALL BE INSTALLED AT THE SAME LOCATION AS THE OLD ONES. ALL GUARD RAIL SPLICES SHALL BE MADE AT POST LOCATIONS ONLY.

ALL WORK AND MATERIALS REQUIRED TO INSTALL THE NEW GUARD RAIL SHALL BE PAID FOR UNDER ITEM 704-01-01020 GUARD RAIL (SINGLE THRIE BEAM) (6'-3" POST SPA.) PER LIN. FT.

STATE OF LOUISIANA
PAUL B. FOSSIER, JR.
REG. No. 21028
REGISTERED PROFESSIONAL ENGINEER IN CIVIL ENGINEERING
4/9/09

BRIDGE AND STRUCTURAL DESIGN

DOTD — DEPARTMENT OF TRANSPORTATION AND DEVELOPMENT

GUARD RAIL REHABILITATION
(FLAT DECK PRECAST BRIDGES)

STANDARD DETAIL

NO.	DATE	REVISION DESCRIPTION	BY
1			

DESIGNED		PARISH	
CHECKED			
DETAILED	J. BENTON	FEDERAL PROJECT	
CHECKED	P. FOSSIER		
DATE	12-2008	STATE PROJECT	
SHEET			

SHEET NUMBER