GENERAL NOTES:

CONSTRUCTION SPECIFICATIONS: LATEST APPROVED LA DOTD STANDARD SPECIFICATIONS.

ALL EXPOSED CORNERS TO HAVE ¾ " CHAMFER UNLESS OTHERWISE NOTED.

DIMENSIONS RELATING TO REINFORCING STEEL ARE TO BAR CENTERS.

REINFORCING STEEL SHALL HAVE 2" COVER UNLESS OTHERWISE SPECIFIED.

IF PRECAST CATCH BASIN IS USED, PLEASE REFER TO STANDARD PLAN PC-01 FOR DETAILS AND SPECIFICATIONS.

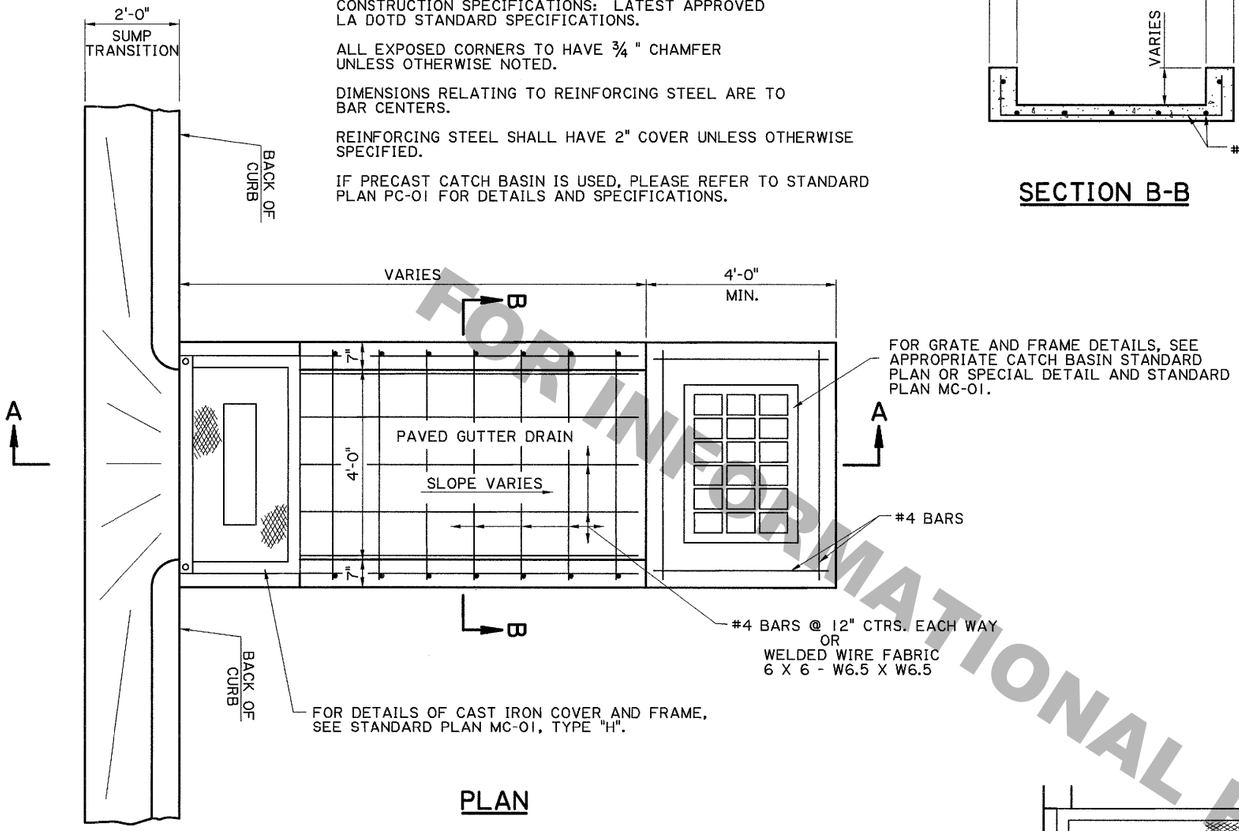

PLAN

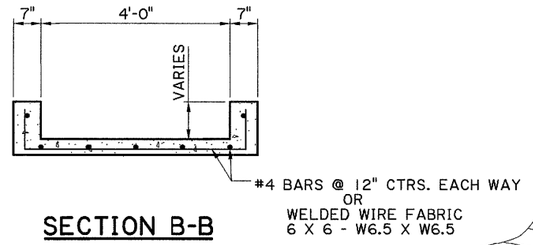

SECTION B-B

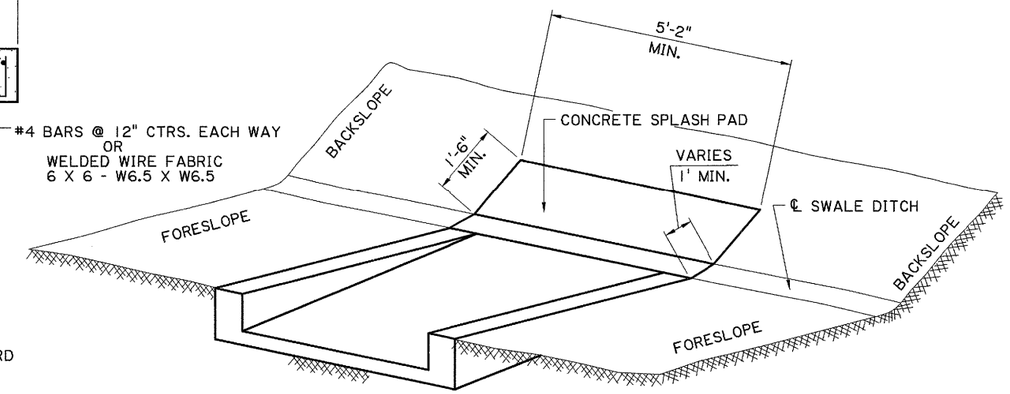

PARTIAL VIEW SHOWING
PAVED GUTTER DRAIN WITHOUT DROP INLET

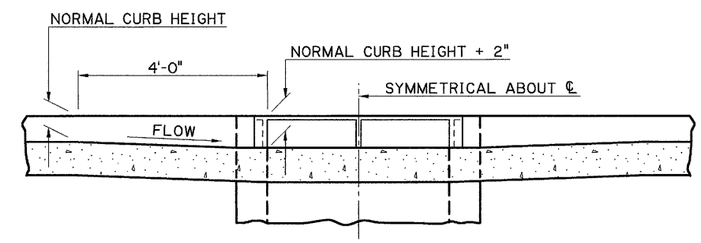

TRANSITION IN CURB HEIGHT
GUTTER DRAIN AT LOW POINT

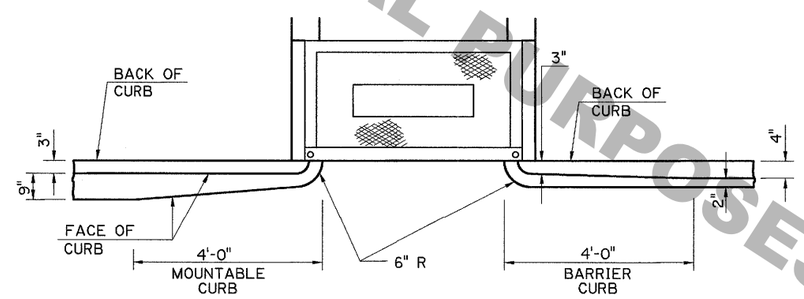

TRANSITION IN CURB WIDTH
(TYPICAL)

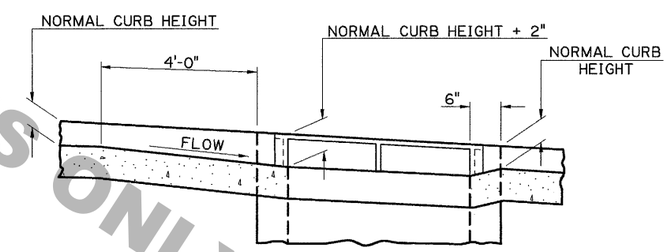

TRANSITION IN CURB HEIGHT
GUTTER DRAIN ON A GRADE

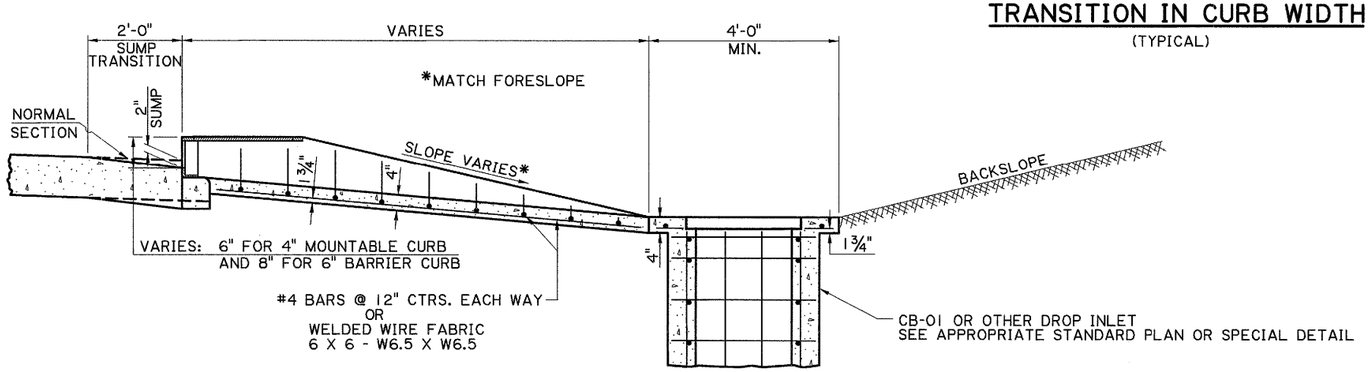

SECTION A-A

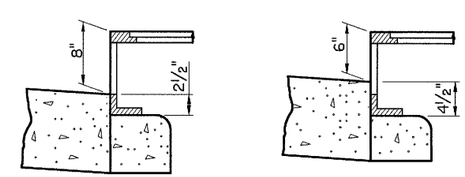

INLET CONFIGURATION

WHEN USED WITH 6" BARRIER CURB

WHEN USED WITH 4" MOUNTABLE CURB

STATE OF LOUISIANA
WILLIAM M. RAY
REG. No. 24936
REGISTERED PROFESSIONAL ENGINEER IN CIVIL ENGINEERING
8/12/09

FOR INFORMATIONAL PURPOSES ONLY

NO.	DATE	REVISION DESCRIPTION	BY
5	8-12-09	Redraft. Rev. 4" Wall TO 7" (SECT. B-B) & Gen.Rev.	WMR
4	9-1-98	CHANGED SHEET BORDER & ADDED NAME & NOTE	JCM
3	8-8-96	ADDED CONCRETE SPLASH PAD NOTE	JCM
2	4-11-96	REVISED DROP INLET DETAIL	WMR
1	5-19-93	REVISED DRAWING OF CURB IN PLAN VIEW	JCM

DESIGNED / CHECKED / DETAILED / CHECKED / DATE DEC. 1982 / SHEET 1 OF 1

PARISH / FEDERAL PROJECT / STATE PROJECT / SHEET NUMBER

PAVED GUTTER DRAIN DETAILS

SPECIAL DETAIL: PG-DRAIN01

HYDRAULICS SECTION

12-AUG-2009 14:47

D:\PW_WorkingDir\D2459\dms09538\PG-DRAIN01..dgn