GENERAL NOTES:

CONSTRUCTION SPECIFICATIONS: LATEST APPROVED LA DOTD STANDARD SPECIFICATIONS.

ALL EXPOSED CORNERS TO HAVE ¾" CHAMFER UNLESS OTHERWISE NOTED.

DIMENSIONS RELATING TO REINFORCING STEEL ARE TO BAR CENTERS.

REINFORCING STEEL SHALL HAVE 2" COVER UNLESS OTHERWISE SPECIFIED.

IF PRECAST CATCH BASIN IS USED, PLEASE REFER TO STANDARD PLAN PC-01 FOR DETAILS AND SPECIFICATIONS.

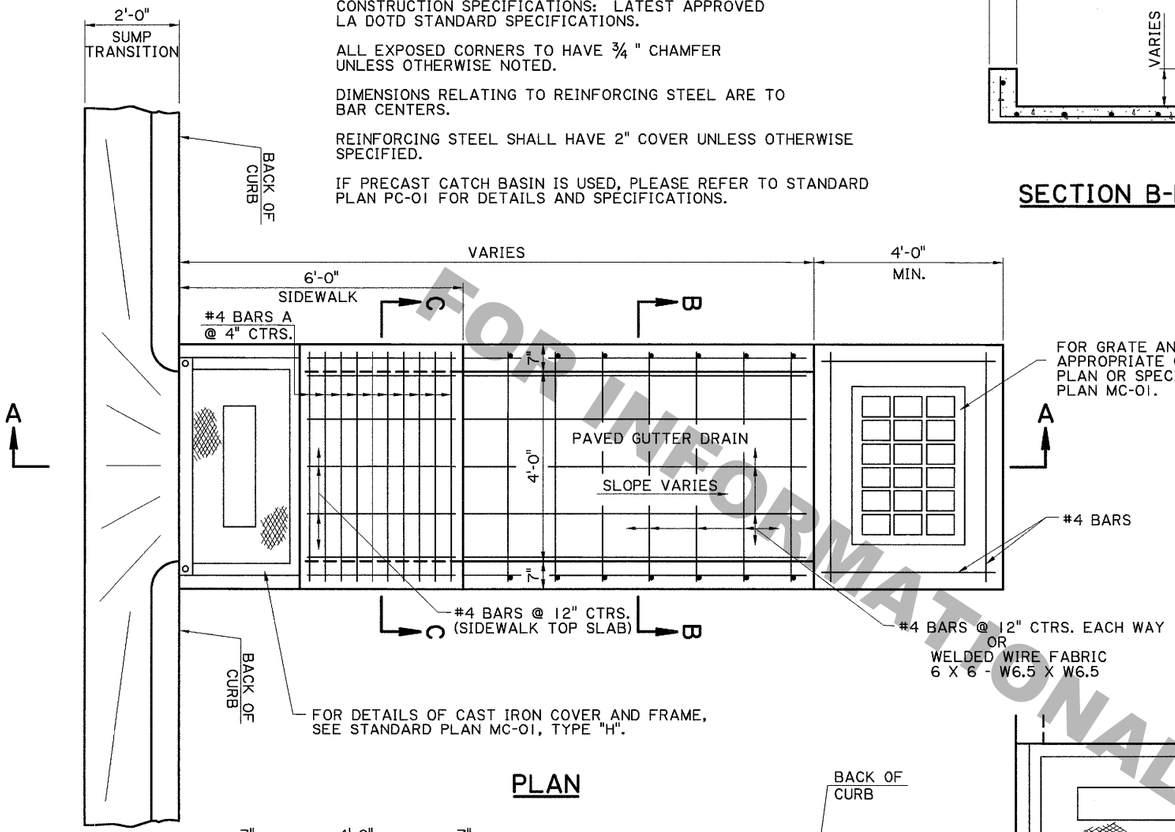

PLAN

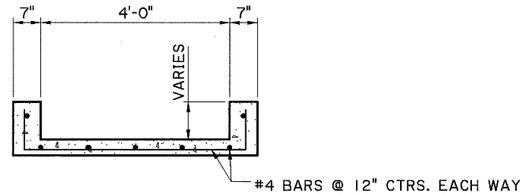

SECTION B-B

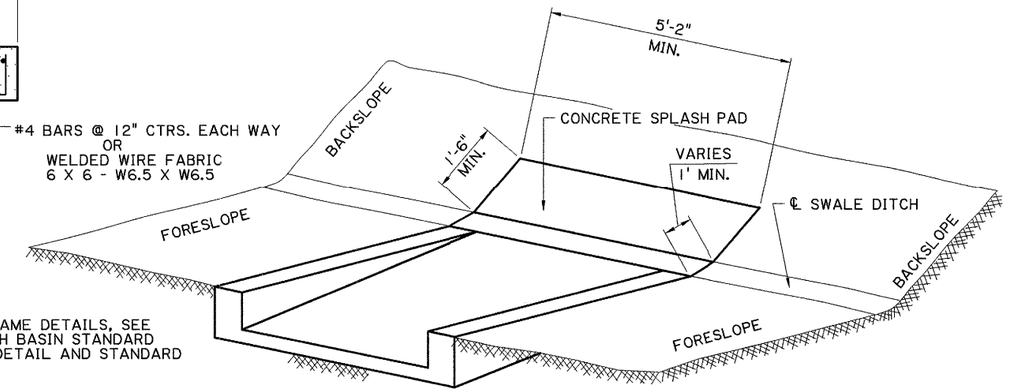

PARTIAL VIEW SHOWING PAVED GUTTER DRAIN WITHOUT DROP INLET

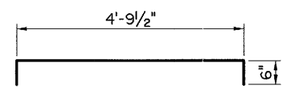

#4 BARS A

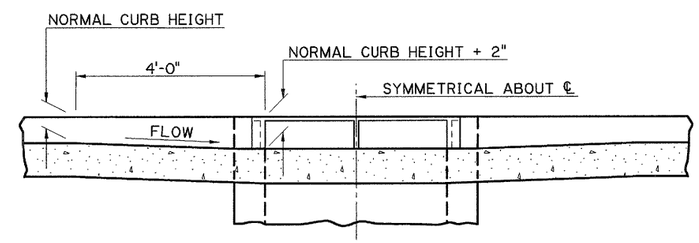

TRANSITION IN CURB HEIGHT GUTTER DRAIN AT LOW POINT

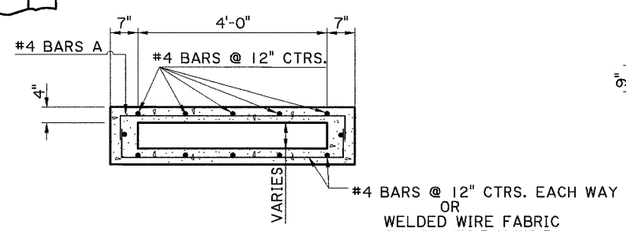

SECTION C-C

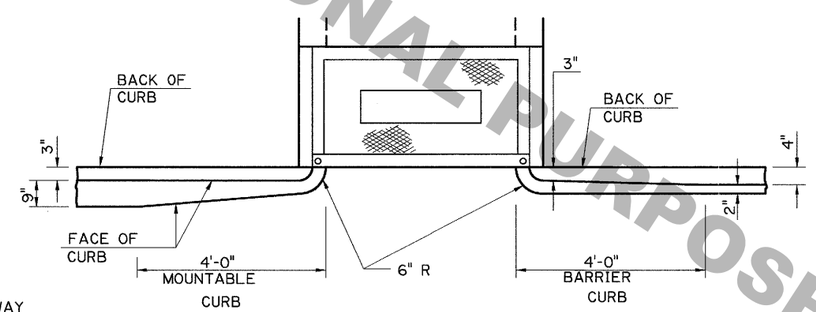

TRANSITION IN CURB WIDTH

(TYPICAL)

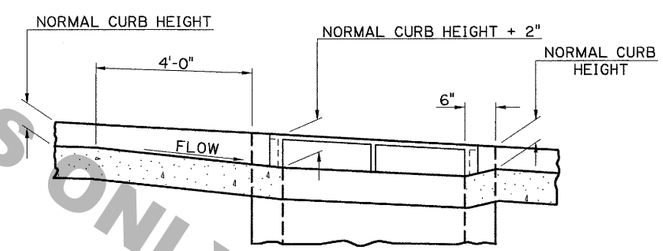

TRANSITION IN CURB HEIGHT GUTTER DRAIN ON A GRADE

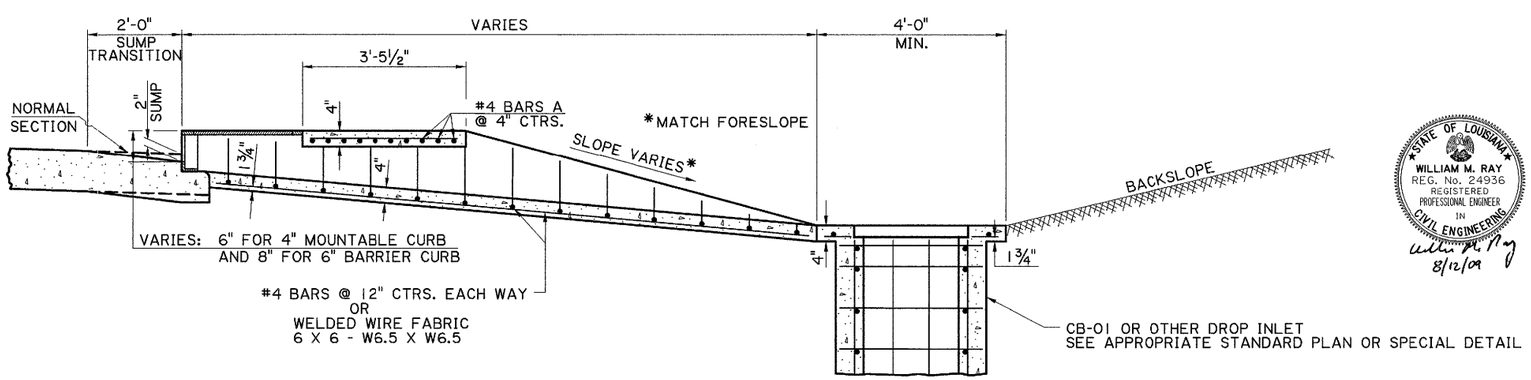

SECTION A-A

STATE OF LOUISIANA
WILLIAM M. RAY
REG. No. 24936
REGISTERED PROFESSIONAL ENGINEER IN CIVIL ENGINEERING
8/12/09

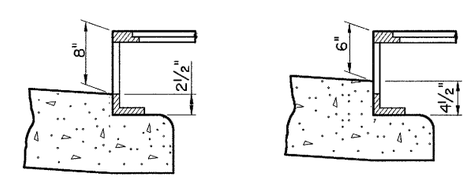

INLET CONFIGURATION

WHEN USED WITH 6" BARRIER CURB

WHEN USED WITH 4" MOUNTABLE CURB

FOR INFORMATIONAL PURPOSES ONLY

NO.	DATE	REVISION DESCRIPTION	BY
5	8-12-09	Redraft, Rev. 4" Wall to 7" (Section B-B), Gen.Rev.	WMR
4	9-23-03	Rev. Sidewalk Dimen. Behind C.B. Cover, New Sheet	JDK
3	9-1-98	Rev. Sheet Border & BARS A Dimen., Added Name	JCM
2	8-8-96	ADDED CONCRETE SPLASH PAD NOTE	JCM
1	4-11-96	REVISED DROP INLET DETAIL	WMR

DESIGNED / CHECKED / DETAILED KJB / CHECKED JDK / DATE 9-23-03 / SHEET 1 OF 1

PARISH / FEDERAL PROJECT / STATE PROJECT / SHEET NUMBER

PAVED GUTTER DRAIN DETAILS WITH 6' SIDEWALK

SPECIAL DETAIL PG-DRAIN02

HYDRAULICS SECTION

13-AUG-2009 13:57

D:\PW_WorkingDir\D2459\dms09538\PG-DRAIN02..dgn