08-DEC-2008 13:48

| SHAFT | | | |
|---|---|---|---|
| SHAFT HEIGHT | BASE ø | TOP ø | THICKNESS |
| 40'-0" | 11.00" | 8.00" | 0.1943 |

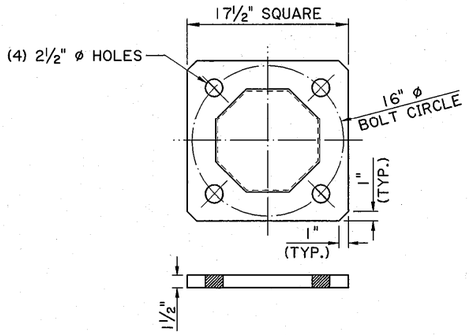


BASE PLATE DETAIL

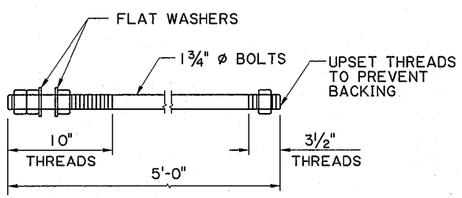


ANCHOR BOLTS

GENERAL NOTES:

DESIGN SPECIFICATIONS: THE STRUCTURAL DESIGN SHALL BE IN ACCORDANCE WITH THE CURRENT AASHTO STANDARD SPECIFICATIONS FOR STRUCTURAL SUPPORTS FOR HIGHWAY SIGNS, LUMINAIRES, AND TRAFFIC SIGNALS, WITH INTERIMS

DESIGN WIND SPEED: 130 MPH

MATERIALS:
1. RVD POLE SHAFT: TAPERED STEEL OCTOGONAL SHAFT SHALL BE ASTM A1011 GRADE 50 (GAGE NO. 6 - WALL THICKNESS = 0.1943").
2. BASE PLATE: ASTM A50 STEEL. ANCHOR BASE SHALL BE WELDED TO POLE SHAFT PRIOR TO GALVANIZING SHAFT.
3. ANCHOR BOLTS: ANCHOR BOLTS SHALL BE AASHTO M314 90 (ASTM F1554) GR. 55 UNC SERIES (OR APPROVED EQUAL).
4. ANCHOR NUTS: NUTS SHALL CONFORM TO ASTM A563 GRADE A HEAVY HEX AND FLAT WASHERS TO ASTM F436. NUTS SHALL BE TIGHTENED TO 1/6 TURN BEYOND SNUG TIGHT.
5. CONCETE: CONCRETE FOR DRILLED SHAFT SHALL BE CLASS "S".
6. REINFORCING STEEL: ALL REINFORCING STEEL SHALL BE GRADE 60.
7. GROUT SHALL BE NONSHRINK GROUT AND SHALL NOT CONTAIN ANY CHLORIDES OR OTHER HARMFUL ADDITIVES THAT COULD CAUSE CORRISION OF THE ANCHOR BOLTS

DRILLED SHAFTS: ALL DRILLED DRAFT CONSTRUCTION SHALL CONFORM TO CURRENT LA STANDARD SPECIFICATION FOR ROADS AND BRIDGES SECTION 814 AND ANY SUPPLEMENTAL SPECIFICATIONS.

WELDING: ALL WELDING SHALL CONFORM TO CURRENT LA. STANDARD SPECIFICATION FOR ROADS AND BRIDGES SECTION 815 AND ANY SUPPLEMENTAL SPECIFICATIONS.

GALVANIZING: POLE SHAFT AND BASE PLATE SHALL BE HOT DIP GALVANIZED AFTER FABRICATION IN ACCORDANCE WITH ASTM A123. STRUCTURAL BOLTS AND OTHER STEEL HARDWARE SHALL BE HOT DIP GALVANIZD IN ACCORDANCE WITH ASTM A153.

FOR INFORMATION ON LIGHTNING COLLECTOR, SPECTRUM COMMUNICATIONS ANTENNA, SOLAR COLLECTORS, ELECTRICAL POWER SYSTEMS, RADAR VEHICLE DETECTORS, SERVICE HEAD, STAINLESS STEEL STRAPS, ALLUMINUM CONDUITS, RVD AND SOLAR COLLECTOR CABLES, RVD CONTROLLER CABINET, MOUNTING BRACKETS AND FRAMES, BALL JOINT BOLTS, HANDHOLES, POLE TOP CAP, AND OTHER MISCELANEOUS MATERIALS, SEE SPECIAL PROVISIONS.

⊗ PLACE #8 BARS IN SUCH A WAY THAT THEY DO NOT INTERFERE WITH ANCHOR BOLTS.

PAYMENT: THE ENTIRE RVD ASSEMBLY INCLUDING THE RVD POLE SHAFT; BASE PLATE; ANCHOR BOLTS, NUTS, AND WASHERS; STRUCTURAL CONCRETE AND STEEL; FOUNDATION; ELECTRICAL POWER SYSTEM; RADAR VEHICLE DETECTOR; AND ALL OTHER ATTACHMENTS AND STRUCTURAL COMPONENTS SHALL BE PAID FOR BY LUMP SUM PER S-ITEM.

✲ SECTION AT HANDHOLE TO BE REINFORCED TO HAVE EQUIVILENT MODULUS AS THE SECTION WITHOUT THE HOLE. HANDHOLE COVERS SHALL BE HINGED WITH PROVISIONS FOR LOCKING. DETAILS TO BE SUBMITTED WITH SHOP DRAWINGS FOR FINAL APPROVAL.

SHOP DRAWINGS SHALL BE SUBMITTED TO LA DOTD FOR FINAL APPROVAL.

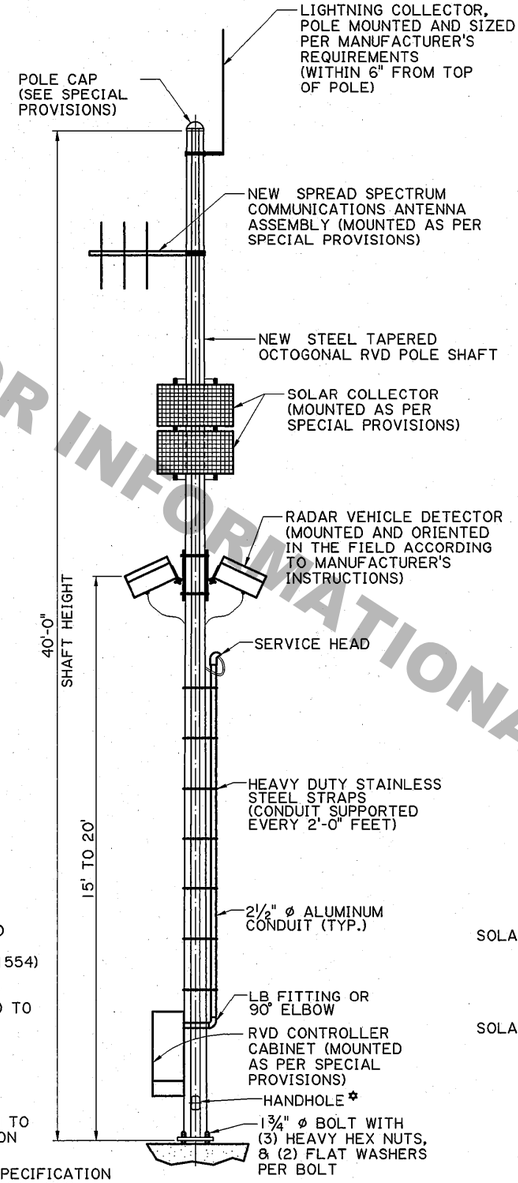


RVD POLE SHAFT INSTALLATION

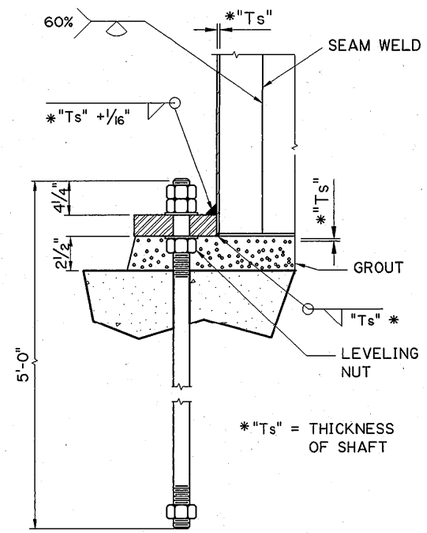


ANCHOR BOLT & BASEWELD DETAIL

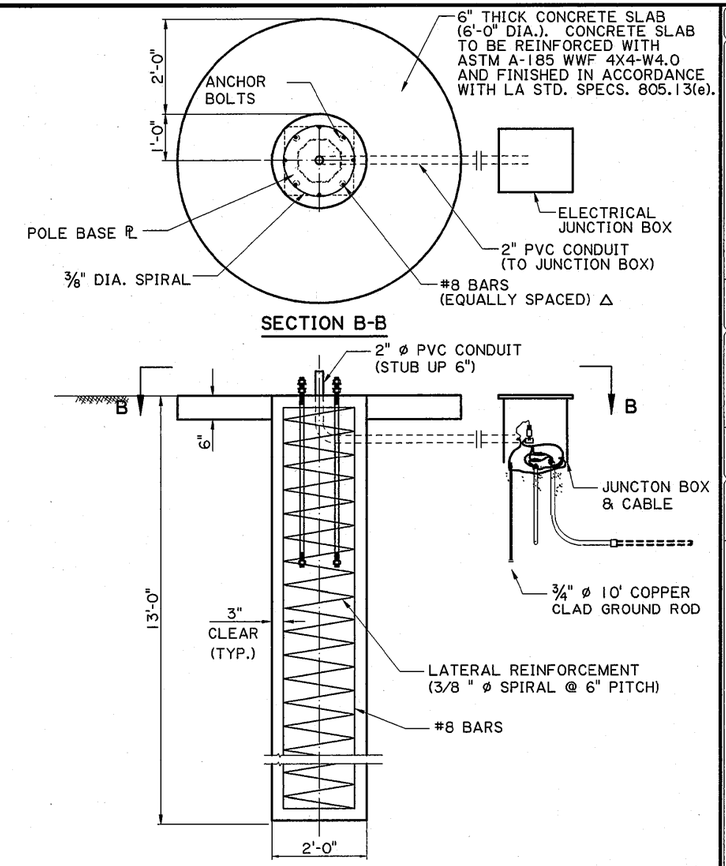


RVD POLE FOUNDATION

(WITH JUNCTION BOX)

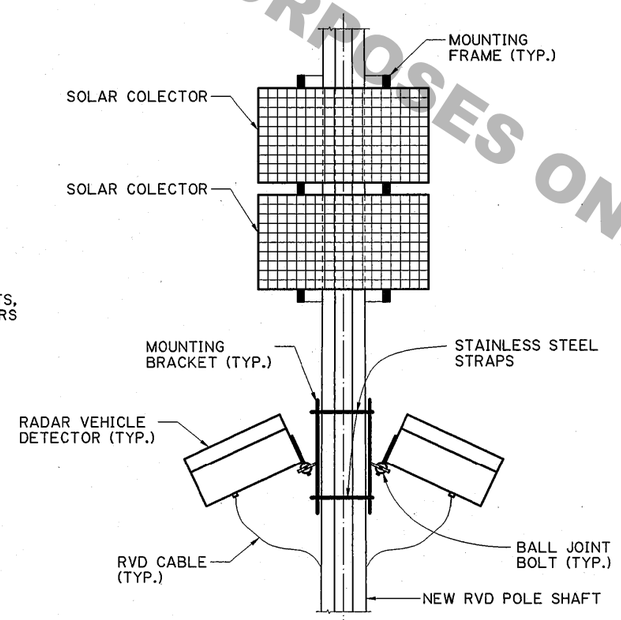


FRONT VIEW

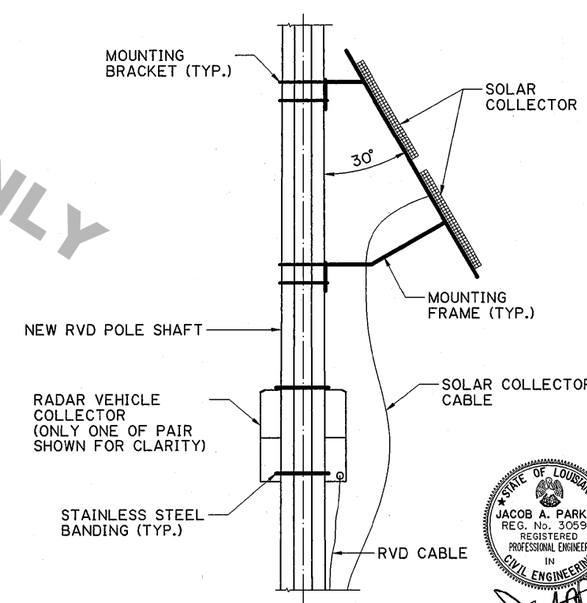


SIDE VIEW

STATE OF LOUISIANA
JACOB A. PARKER
REG. No. 30596
REGISTERED PROFESSIONAL ENGINEER IN CIVIL ENGINEERING
10-04-04

FOR INFORMATIONAL PURPOSES ONLY

| SHEET NUMBER | |
|---|---|
| PARISH | |
| FEDERAL PROJECT | |
| STATE PROJECT | |
| DESIGNED M. ORDOGNE | |
| CHECKED J. PARKER | |
| DETAILED M. ORDOGNE | |
| CHECKED J. PARKER | |
| DATE OCT. 2004 | |
| SHEET 1 OF 1 | |

| NO. | DATE | REVISION DESCRIPTION | BY |
|---|---|---|---|

RADAR VEHICLE DETECTOR

40' SHAFT & FOUNDATION DETAILS

BRIDGE AND STRUCTURAL DESIGN

IP_PWP:dms31589\rvd.dgn