24-NOV-2008 09:21

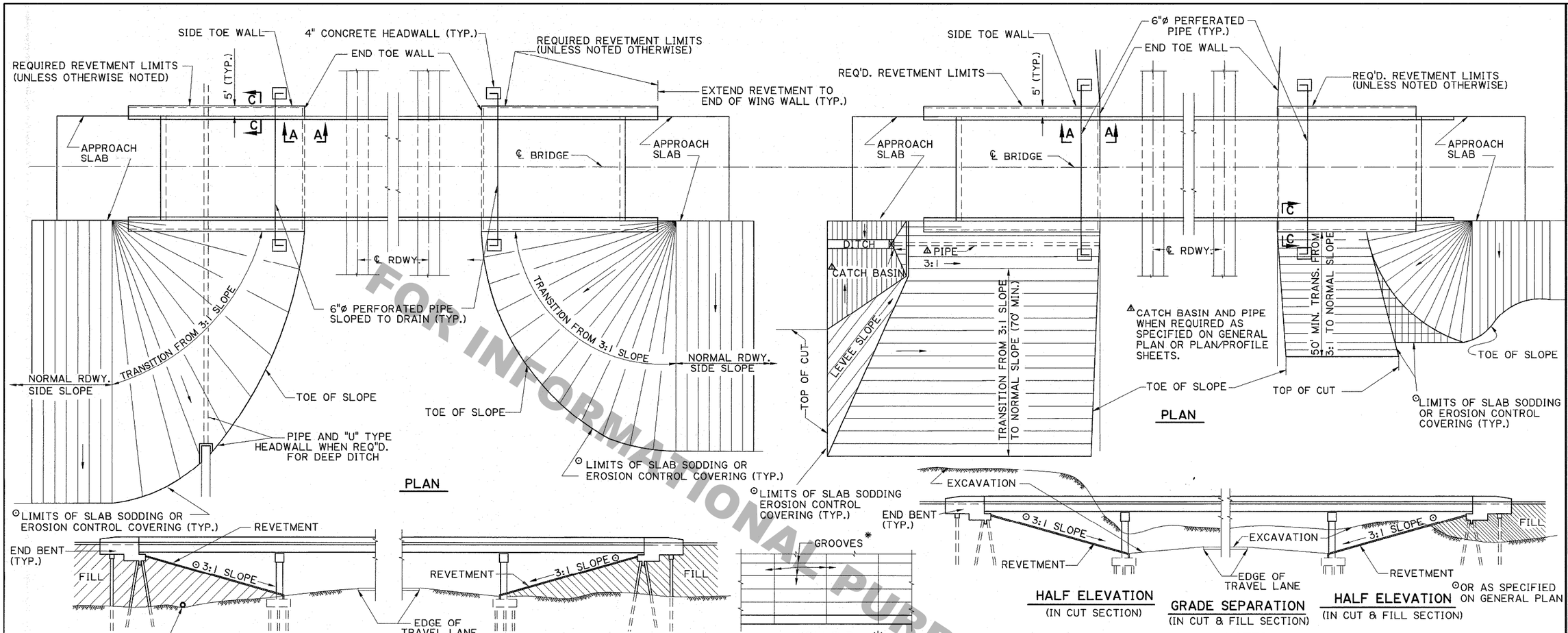

* SURFACE SHALL BE GROOVED SO THAT NO SECTION SHALL EXCEED 20 SQ. FEET WITH NO SIDE GREATER THAN 6'. ALL GROOVES SHALL BE A MINIMUM OF 1" DEEP. FOR SKEWED CROSSINGS, NO SECTION SHALL HAVE AN ANGLE LESS THAN 60° NOR GREATER THAN 120°.

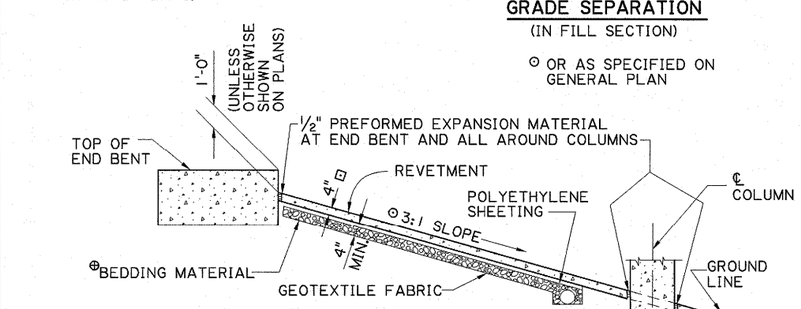

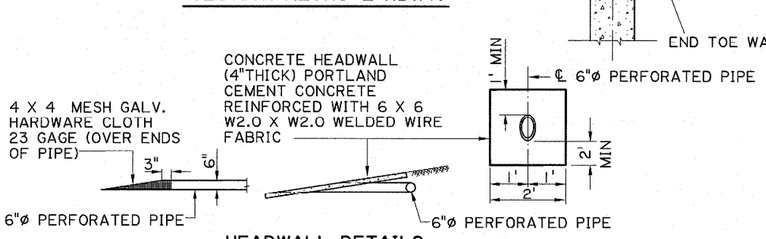

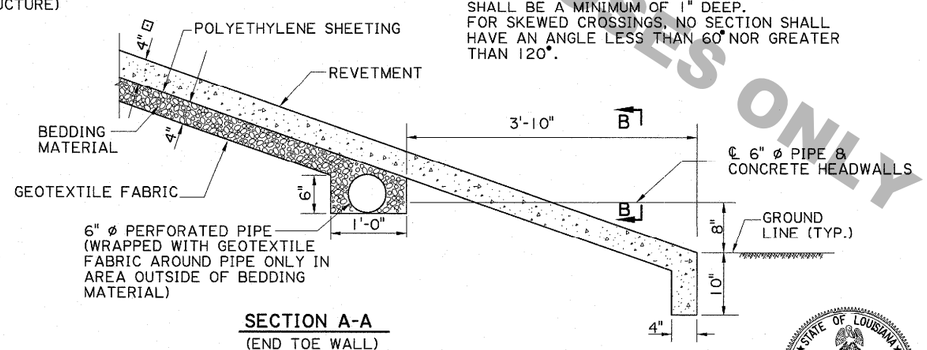

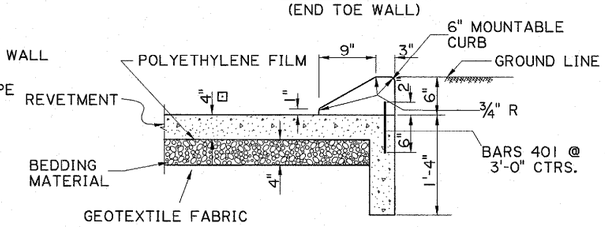

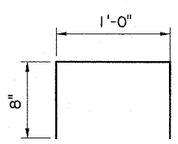

BARS 401
(2" ø PIN)

ALL DETAILS NTS

STATE OF LOUISIANA
PAUL B. FOSSIER, JR.
REG. No. 21028
REGISTERED PROFESSIONAL ENGINEER IN CIVIL ENGINEERING
11-10-08

NOTES:

1. CONCRETE CAST-IN-PLACE REVETMENT (CLASS R CONCRETE) INCLUDING GEOTEXTILE FABRIC, POLYETHYLENE SHEETING, BEDDING MATERIAL, 6" ø PERFORATED PIPE, WELDED WIRE FABRIC, #4 BARS, HARDWARE CLOTH, AND ¼" PREFORMED EXPANSION MATERIAL ARE TO BE INCLUDED UNDER ITEM 712-01-00100, CONCRETE CAST-IN-PLACE REVETMENT (4" THICK), PER SQ. YARD. QUANTITIES WILL BE ACTUAL SURFACE AREA ON SLOPE.
2. ⊡ AT THE CONTRACTOR'S OPTION, REVETMENT MAY BE SHOTCRETE (3" THICK) REINFORCED WITH 6 X 6-W2.0 X W2.0 WELDED WIRE FABRIC AND GROOVED AS SPECIFIED IN VIEW B-B. THE CONTRACTOR SHALL BE REQUIRED TO SUBMIT HIS MIX DESIGN FOR APPROVAL TO THE D.O.T.D. DISTRICT LAB PRIOR TO BEGINNING WORK. PAYMENT WILL BE MADE UNDER ITEM 712-01-00100 PER SQ. YARD. SHOTCRETING SHALL CONFORM TO ALL REQUIREMENTS OF "SPECIFICATIONS FOR MATERIALS, PROPORTIONING, AND APPLICATION OF SHOTCRETE, ACI 506.2, LATEST EDITION. THE FINE AGGREGATE SHALL CONTAIN NOT LESS THAN 3 NOR MORE THAN 6 PERCENT MOISTURE BY WEIGHT.
3. SLAB SODDING TO BE PAID FOR UNDER ITEM 714-01 SLAB SODDING, PER SQUARE YARD.
4. EROSION CONTROL COVERING TO BE PAID FOR UNDER ITEM 720-01. EROSION CONTROL SYSTEM. SLOPE PROTECTION PER SQ. YARD.
5. GEOTEXTILE FABRIC SHALL BE CLASS C OR D IN ACCORDANCE WITH LA. D.O.T.D. QPL NO. 61, POLYETHLENE SHEETING (6 MIL THICKNESS) SHALL BE IN ACCORDANCE WITH SECTION 1011.01(d) OF THE STANDARD SPECIFICATIONS.
6. ⊕ LIMITS OF BEDDING MATERIAL TO BE OUTER EDGES OF REVETMENT. BEDDING MATERIAL AS PER SECTION 726 AND TO BE UNIFORMLY COMPACTED AS DIRECTED BY THE PROJECT ENGINEER. GEOTEXTILE FABRIC TO BE INSTALLED BETWEEN EARTHFILL AND BEDDING MATERIAL. POLYETHYLENE SHEETING TO BE INSTALLED BETWEEN BEDDING MATERIAL AND REVETMENT.

FOR INFORMATIONAL PURPOSES ONLY

SHEET NUMBER			
PARISH	FEDERAL PROJECT	STATE PROJECT	
DESIGNED P. FOSSIER	DETAILED G. GRASS		
CHECKED A. ALLEN	CHECKED P. FOSSIER	DATE OCT., 2008	SHEET

NO.	DATE	REVISION DESCRIPTION	BY

STATE OF LOUISIANA DEPARTMENT OF TRANSPORTATION AND DEVELOPMENT

CAST-IN-PLACE REVETMENT DETAILS

CR-01

BRIDGE AND STRUCTURAL DESIGN

IP_PWP:dms31589\cr01.dgn