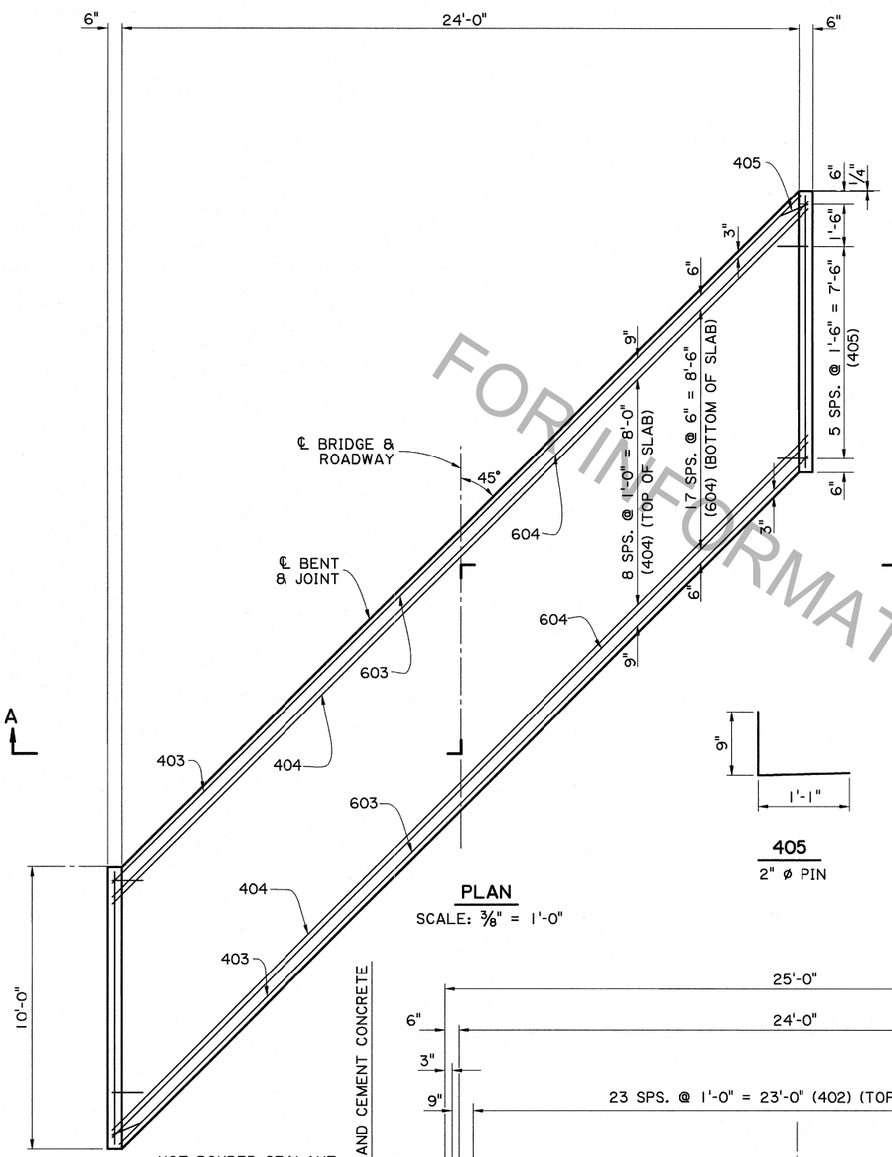

PLAN

SCALE: 3/8" = 1'-0"

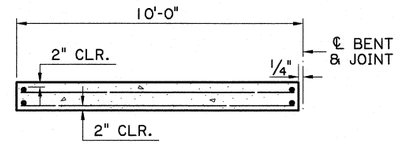

(FOR PORTLAND CEMENT CONCRETE ROADWAY PAVEMENT)

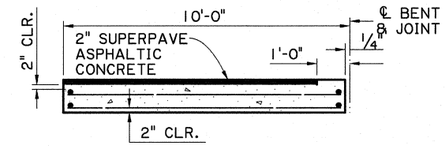

SECTION ALONG ℄ ROADWAY

SCALE : 1/4" = 1'-0"

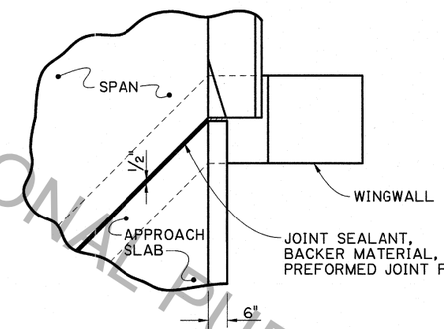

JOINT DETAIL

N.T.S.

405

2" ø PIN

ESTIMATED QUANTITIES (ONE SLAB)				
BAR	NO.	UNIT LENGTH	TOTAL LENGTH	LOCATION
801	7	1'-0"	7'-0"	DOWELS
TOTAL NO. 8 BARS = 7'-0" = 19 LBS.				
601	2	9'-7"	19'-2"	LONGIT. BOT. OF SLAB
602	48	9'-6"	456'-0"	LONGIT. BOT. OF SLAB
603	2	34'-6"	69'-0"	TRANSV. BOT. OF SLAB
604	18	34'-10"	627'-0"	TRANSV. BOT. OF SLAB
TOTAL NO. 6 BARS = 1,171'-2" = 1,759 LBS.				
401	4	9'-7"	38'-4"	LONGIT. TOP OF SLAB & CURB
402	24	9'-6"	228'-0"	LONGIT. TOP OF SLAB
403	2	34'-6"	69'-0"	TRANSV. TOP OF SLAB
404	9	34'-10"	313'-6"	TRANSV. TOP OF SLAB
405	14	1'-10"	25'-8"	DOWELS IN CURB
TOTAL NO. 4 BARS = 674'-6" = 451 LBS.				
⊙ TOTAL DEFORMED REINFORCING STEEL = 2,229 LBS.				
CONCRETE APPROACH SLAB = 27.78 SQ. YDS.				
⊠ ⊙ SUPERPAVE ASPHALTIC CONCRETE = 2.6 TONS				
⊠ ⊙ SAW CUT & SEAL = 33 LIN. FT.				

⊙ TO BE PAID FOR UNDER ITEM CONCRETE APPROACH SLABS.

⊠ REQUIRED WHEN APPROACH SLAB IS ADJACENT TO SUPERPAVE ASPHALTIC CONCRETE PAVEMENT.

APPROACH SLAB NOTES:

CONSTRUCTION SPECIFICATIONS: LATEST APPROVED LOUISIANA STANDARD SPECIFICATIONS FOR ROADS AND BRIDGES, SUPPLEMENTAL SPECIFICATIONS AND SPECIAL PROVISIONS.

DESIGN SPECIFICATIONS: AASHTO LRFD BRIDGE DESIGN SPECIFICATIONS 4th EDITION, WITH 2008 & 2009 INTERIMS.

STRUCTURAL CONCRETE: ALL CONCRETE SHALL BE CLASS AA. EXPOSED EDGES SHALL HAVE A 3/4" CHAMFER, UNLESS OTHERWISE NOTED.

REINFORCING STEEL: ALL REINFORCING STEEL SHALL BE GRADE 60. DIMENSIONS RELATING TO THE FABRICATION ARE OUT-TO-OUT OF BARS, UNLESS OTHERWISE NOTED. DIMENSIONS RELATING TO SPACING ARE TO BAR CENTERS, UNLESS OTHERWISE NOTED.

BEDDING MATERIAL: FOR DETAILS OF BEDDING MATERIAL AND UNDERDRAINS, SEE STANDARD DETAIL ASD-SS.

BASIS OF PAYMENT: ALL MATERIAL SHALL BE PAID FOR UNDER 'CONCRETE APPROACH SLABS' ACCORDING TO THE SPECIFICATIONS.

SAWING & SEALING: THE SUPERPAVE ASPHALTIC CONCRETE SHALL BE SAW CUT AT THE END OF THE CONCRETE APPROACH SLAB THE ENTIRE ROADWAY WIDTH AND SEALED. COST TO BE INCLUDED WITH CONCRETE APPROACH SLABS.

STATE OF LOUISIANA
JENAN NAKHLEH
License No. 18692
PROFESSIONAL ENGINEER
IN
CIVIL ENGINEERING
3/27/2013

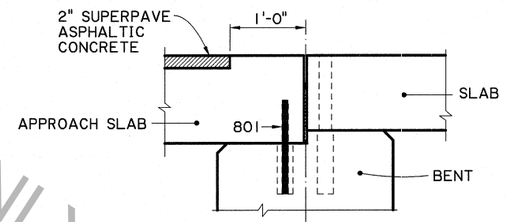

DETAIL A

SCALE : 1" = 1'-0"

(SUPERPAVE ASPHALTIC CONCRETE PAVEMENT OPTION)

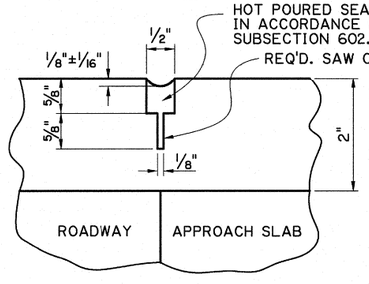

SAWING & SEALING JOINT DETAIL

N.T.S.

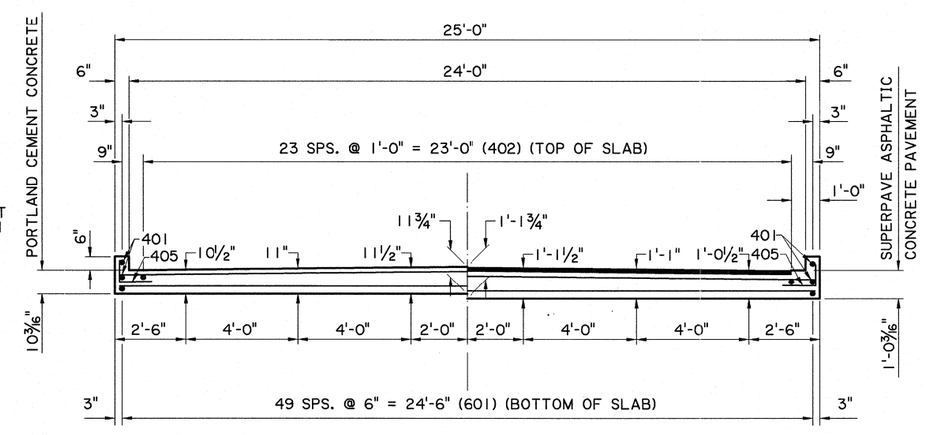

(HALF SECTION) (PORTLAND CEMENT CONCRETE)

(HALF SECTION) (SUPERPAVE ASPHALTIC CONCRETE PAVEMENT)

SECTION A-A

SCALE 3/8" = 1'-0"

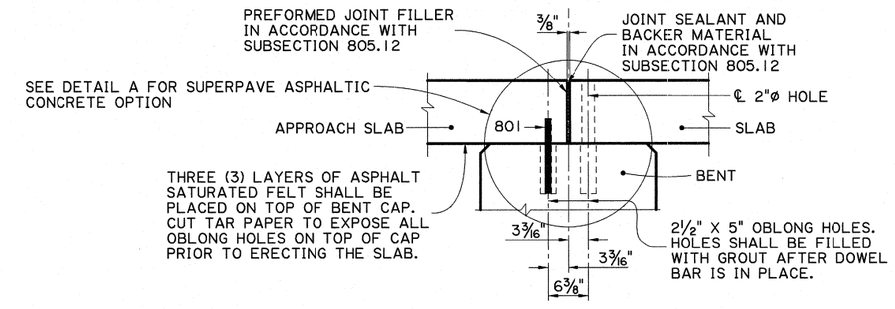

TYPICAL JOINT DETAIL

SCALE : 1" = 1'-0"

NOTE: FOR ADDITIONAL JOINT DETAILS SEE SPAN SHEET.

FOR INFORMATIONAL PURPOSES ONLY

NO.	DATE	REVISION OR CHANGE ORDER DESCRIPTION	BY

SHEET NUMBER

PARISH | CONTROL SECTION | STATE PROJECT

DESIGNED B. DELATTE
CHECKED J. NAKHLEH
DETAILED D. HYMEL
CHECKED J. NAKHLEH
REVIEWED 3/06/2013
SERIES # 13 OF 13

STATE OF LOUISIANA DEPARTMENT OF TRANSPORTATION AND DEVELOPMENT

ALTERNATE APPROACH SLAB

10'-0" CAST-IN-PLACE APPROACH SLAB
24'-0" CLEAR ROADWAY
45° CROSSING TWO WAY TANGENT

STANDARD DETAIL NO. PSS-45-24-20SL

BRIDGE & STRUCTURAL DESIGN

IP_PWP:d0220949\SS4524altaprslab.dgn 3/28/2013 13:3