3/28/2013 13:3

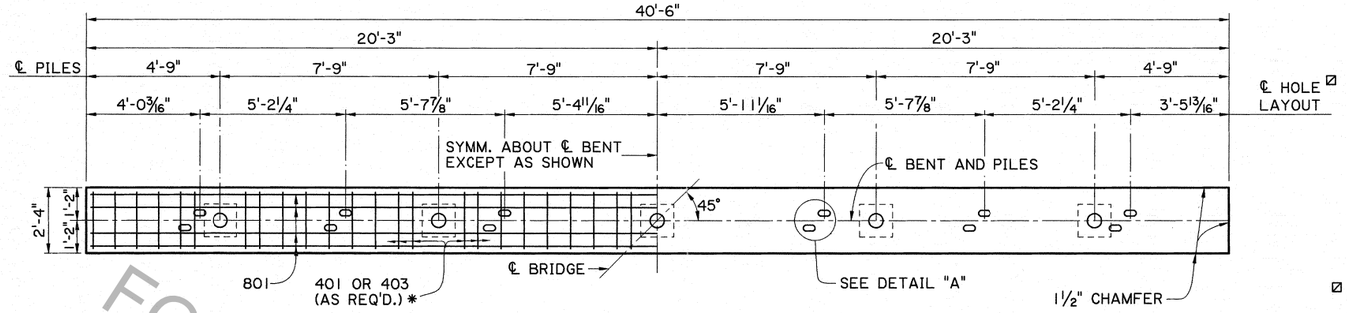

⊠ HOLES ARE OPTIONAL AT EXPANSION ENDS.

* USE 403 BARS AT HOLES ONLY

PLAN - INTERMEDIATE BENT
SCALE 3/8" = 1'-0"

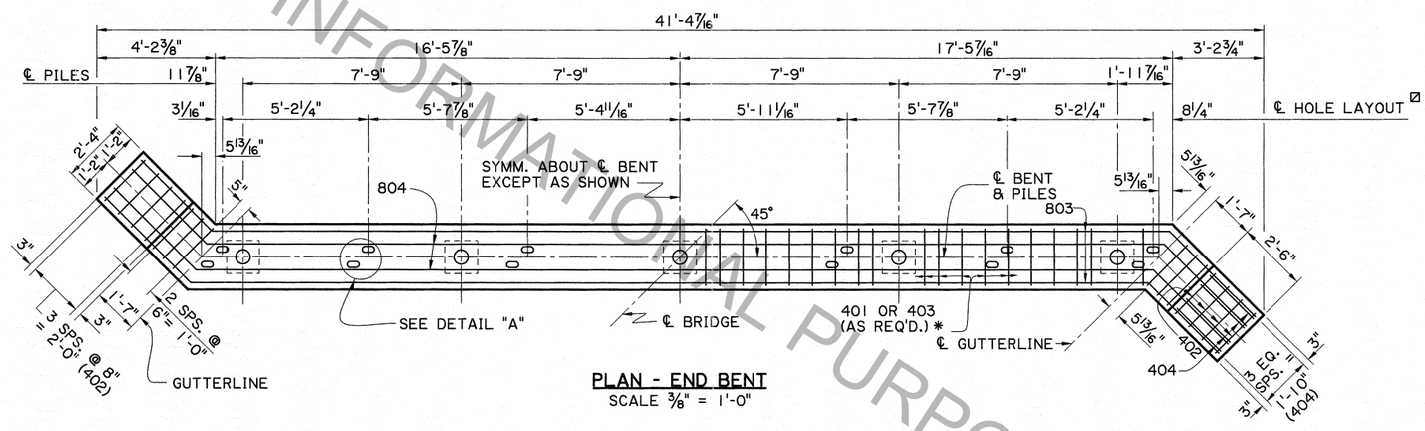

PLAN - END BENT
SCALE 3/8" = 1'-0"

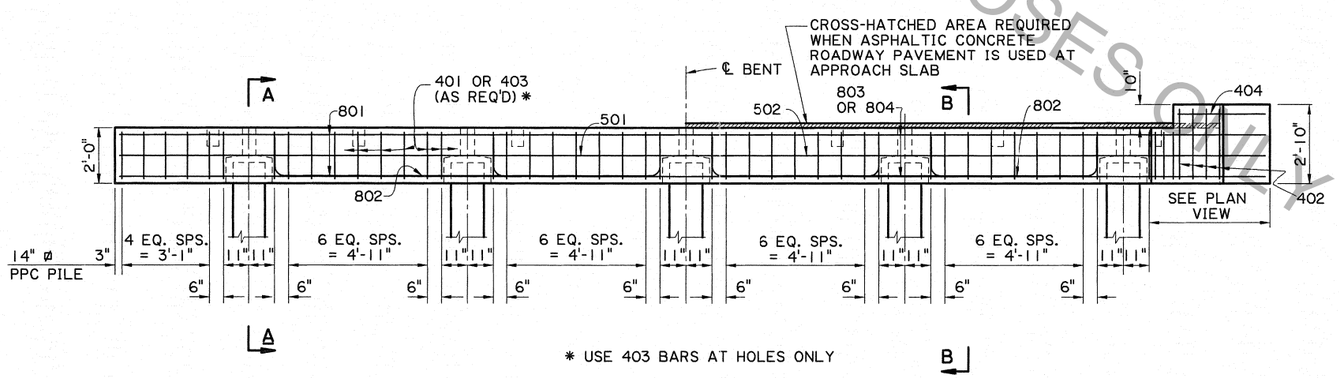

* USE 403 BARS AT HOLES ONLY

HALF ELEVATION - INTERMEDIATE BENT
SCALE 3/8" = 1'-0"

HALF ELEVATION - END BENT
SCALE 3/8" = 1'-0"

FOR INFORMATIONAL PURPOSES ONLY

DESIGNED	J. NAKHLEH
CHECKED	H. THOMAS
DETAILED	D. HYMEL
CHECKED	J. NAKHLEH
REVIEWED	3/06/2013
SERIES #	5 OF 13

SHEET NUMBER | PARISH | CONTROL SECTION | STATE PROJECT

NO. | DATE | REVISION OR CHANGE ORDER DESCRIPTION | BY

ALTERNATE BENTS (1 OF 2)
PRECAST CONCRETE BENTS
24'-0" CLEAR ROADWAY
45° CROSSING TWO WAY TANGENT

STANDARD DETAIL PSS-45-24-20SL

BRIDGE & STRUCTURAL DESIGN

IP_PWP:d0220949\SS4524altbent1a.dgn