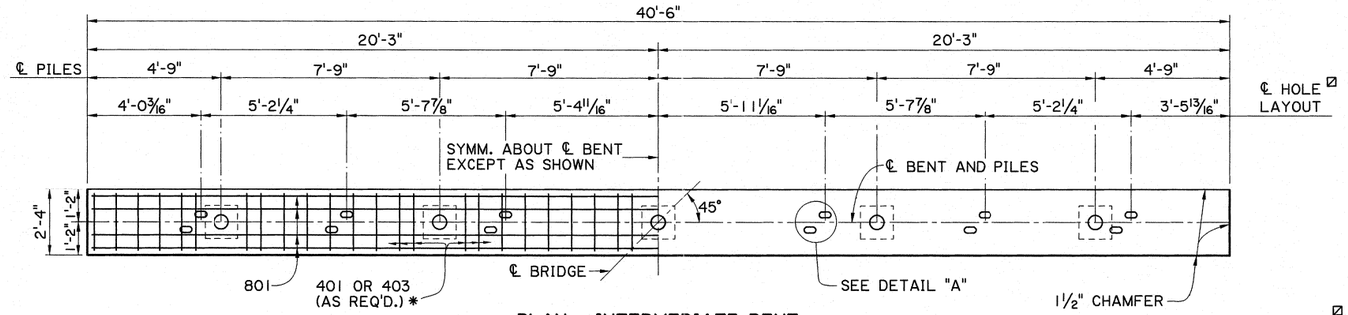

* USE 403 BARS AT HOLES ONLY

PLAN - INTERMEDIATE BENT
SCALE 3/8" = 1'-0"

⊠ HOLES ARE OPTIONAL AT EXPANSION ENDS.

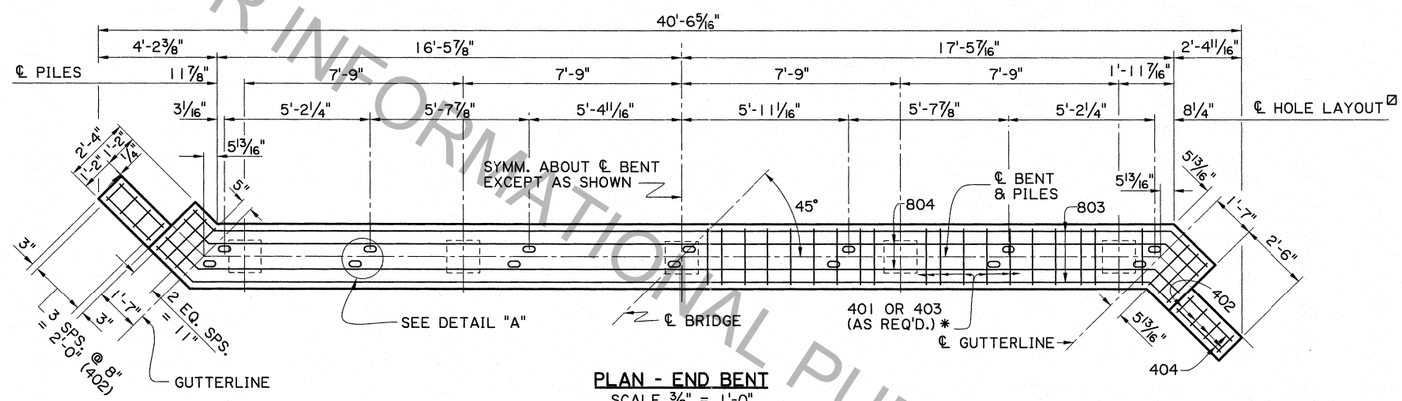

PLAN - END BENT
SCALE 3/8" = 1'-0"

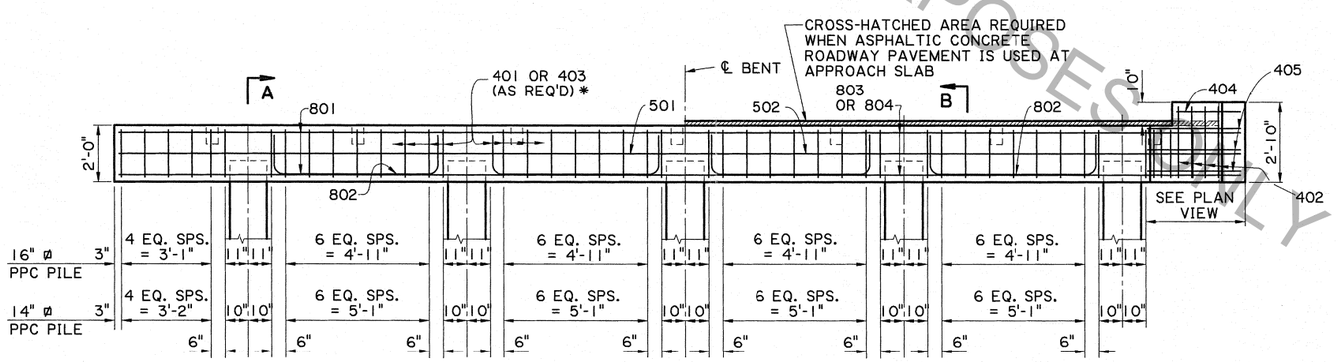

* USE 403 BARS AT HOLES ONLY

HALF ELEVATION - INTERMEDIATE BENT
SCALE 3/8" = 1'-0"

HALF ELEVATION - END BENT
SCALE 3/8" = 1'-0"

FOR INFORMATIONAL PURPOSES ONLY

STATE OF LOUISIANA
JENAN NAKHLEH
License No. 18692
PROFESSIONAL ENGINEER
IN
CIVIL ENGINEERING
3/27/2013

SHEET NUMBER

DESIGNED	J. NAKHLEH	PARISH	
CHECKED	H. THOMAS	CONTROL SECTION	
DETAILED	D. HYMEL		
CHECKED	J. NAKHLEH		
REVIEWED	3/06/2013	STATE PROJECT	
SERIES #	7 OF 13		

NO.	DATE	REVISION OR CHANGE ORDER DESCRIPTION	BY

ALTERNATE BENTS (1 OF 2)
CAST-IN-PLACE CONCRETE BENTS
24'-0" CLEAR ROADWAY
45° CROSSING TWO WAY TANGENT

STANDARD SERIAL NO. PSS-45-24-20SL

BRIDGE & STRUCTURAL DESIGN

3/28/2013 13:3
IP_PWP:d0220949\SS4524altbent2a.dgn