3/28/2013 15:0

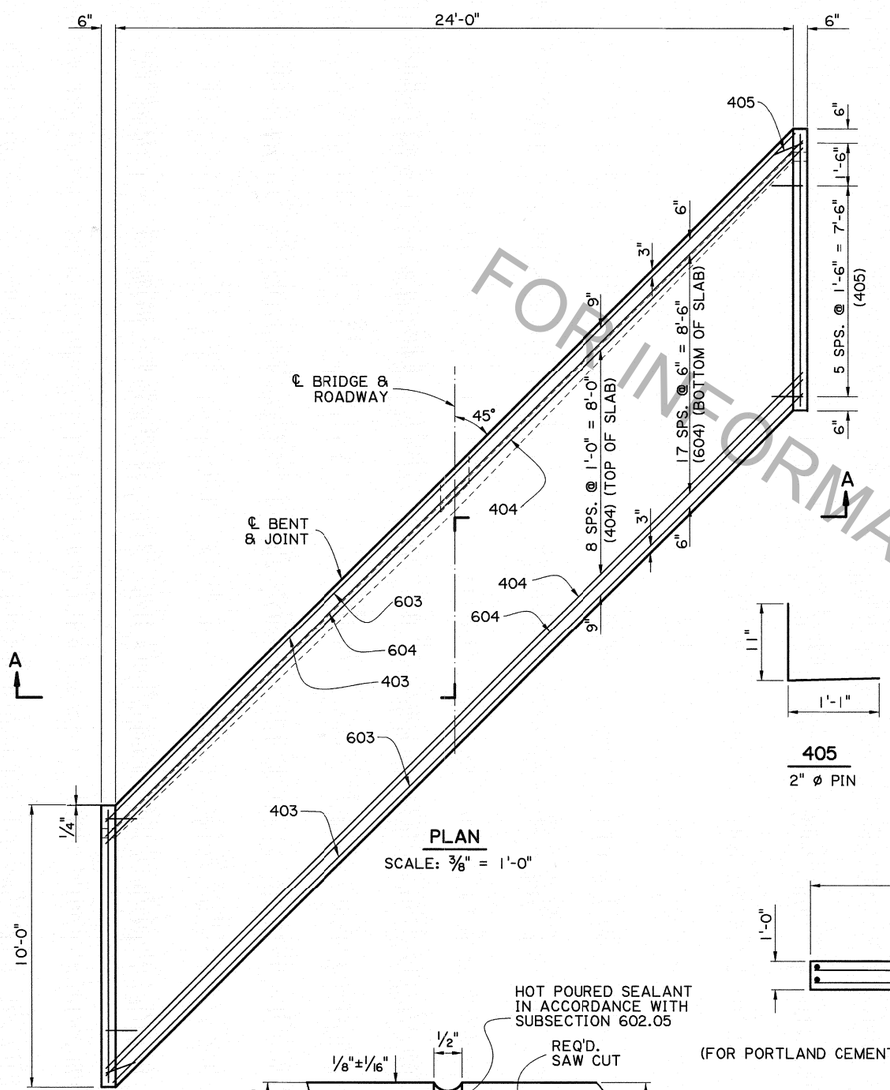

PLAN
SCALE: 3/8" = 1'-0"

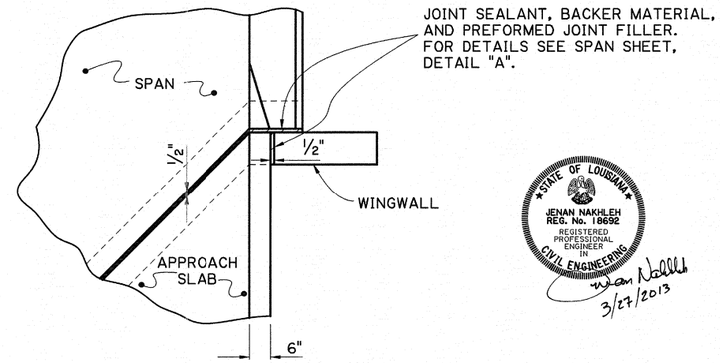

JOINT DETAIL
SCALE : 3/8" = 1'-0"

STATE OF LOUISIANA
JENAN NAKHLEH
REG. No. 18692
REGISTERED PROFESSIONAL ENGINEER IN CIVIL ENGINEERING
Jenan Nakhleh
3/27/2013

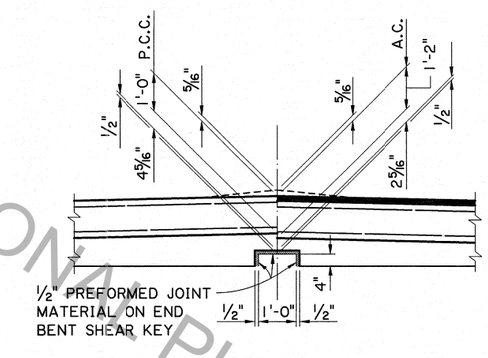

DETAIL A
SCALE : 1/2" = 1'-0"

405
2" ø PIN

ESTIMATED QUANTITIES (ONE SLAB)				
BAR	NO.	UNIT LENGTH	TOTAL LENGTH	LOCATION
601	2	9'-7"	19'-2"	LONGIT. BOT. OF SLAB
602	48	9'-6"	456'-0"	LONGIT. BOT. OF SLAB
603	2	34'-6"	69'-0"	TRANSV. BOT. OF SLAB
604	18	34'-10"	627'-0"	TRANSV. BOT. OF SLAB
TOTAL NO. 6 BARS = 1171'-2" = 1,759 LBS.				
401	4	9'-7"	38'-4"	LONGIT. TOP OF SLAB & CURB
402	24	9'-6"	228'-0"	LONGIT. TOP OF SLAB
403	2	34'-6"	69'-0"	TRANSV. TOP OF SLAB
404	9	34'-10"	313'-6"	TRANSV. TOP OF SLAB
405	14	2'-0"	28'-0"	DOWELS IN CURB
TOTAL NO. 4 BARS = 676'-10" = 452 LBS.				
⊙ TOTAL DEFORMED REINFORCING STEEL = 2,211 LBS.				
CONCRETE APPROACH SLAB = 27.78 SQ. YDS.				
⊙ ⊠ SUPERPAVE ASPHALTIC CONCRETE = 2.5 TONS				
⊙ ⊠ SAW CUT & SEAL = 33 LIN. FT.				

⊙ TO BE PAID FOR UNDER ITEM CONCRETE APPROACH SLABS.

⊠ REQUIRED WHEN APPROACH SLAB IS ADJACENT TO SUPERPAVE ASPHALTIC CONCRETE PAVEMENT.

APPROACH SLAB NOTES:

CONSTRUCTION SPECIFICATIONS: LATEST APPROVED LOUISIANA STANDARD SPECIFICATIONS FOR ROADS AND BRIDGES, SUPPLEMENTAL SPECIFICATIONS AND SPECIAL PROVISIONS.

DESIGN SPECIFICATIONS: AASHTO LRFD BRIDGE DESIGN SPECIFICATIONS, 4th EDITION, WITH 2008 & 2009 INTERIMS.

STRUCTURAL CONCRETE: ALL CONCRETE SHALL BE CLASS AA. EXPOSED EDGES SHALL HAVE A 3/4" CHAMFER, UNLESS OTHERWISE NOTED.

REINFORCING STEEL: ALL REINFORCING STEEL SHALL BE GRADE 60. DIMENSIONS RELATING TO THE FABRICATION ARE OUT-TO-OUT OF BARS, UNLESS OTHERWISE NOTED. DIMENSIONS RELATING TO SPACING ARE TO BAR CENTERS, UNLESS OTHERWISE NOTED.

BEDDING MATERIAL: FOR DETAILS OF BEDDING MATERIAL AND UNDERDRAINS, SEE STANDARD DETAIL ASD-SS.

SAWING & SEALING: THE SUPERPAVE ASPHALTIC CONCRETE SHALL BE SAW CUT AT THE END OF THE CONCRETE APPROACH SLAB THE ENTIRE ROADWAY WIDTH AND SEALED, COST TO BE INCLUDED WITH CONCRETE APPROACH SLABS.

BASIS OF PAYMENT: ALL MATERIAL SHALL BE PAID FOR UNDER 'CONCRETE APPROACH SLABS' ACCORDING TO THE SPECIFICATIONS.

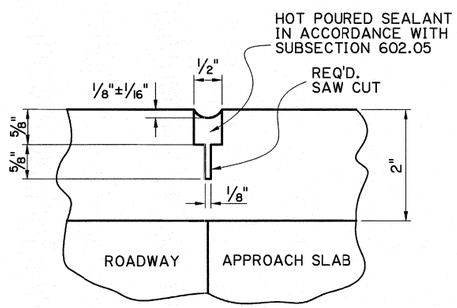

SAWING & SEALING JOINT DETAIL ⊙
N.T.S.

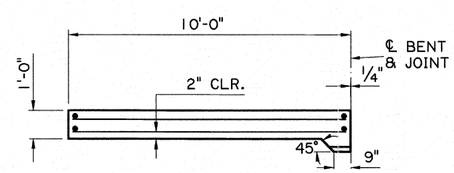

(FOR PORTLAND CEMENT CONCRETE ROADWAY PAVEMENT)

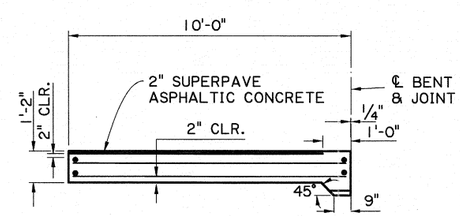

(FOR SUPERPAVE ASPHALTIC CEMENT CONCRETE ROADWAY PAVEMENT)

SECTION ALONG ℄ ROADWAY
SCALE : 3/8" = 1'-0"

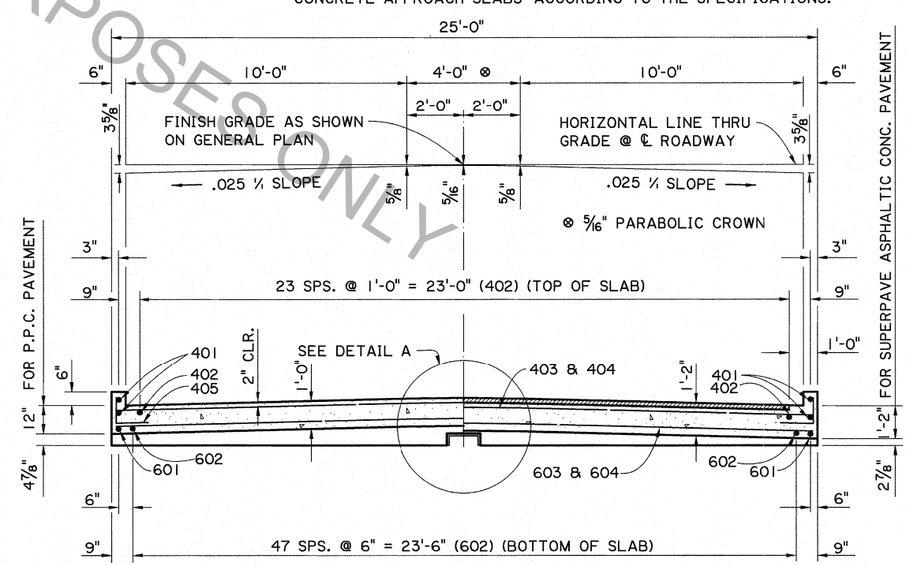

SECTION A-A
SCALE: 3/8" = 1'-0"

FOR INFORMATIONAL PURPOSES ONLY

SHEET NUMBER

DESIGNED J. NAKHLEH	PARISH	STATE PROJECT
CHECKED B. DELATTE	CONTROL SECTION	
DETAILED D. HYMEL		
CHECKED J. NAKHLEH		
REVIEWED 3/06/2013		
SERIES # 4 OF 13		

NO.	DATE	REVISION OR CHANGE ORDER DESCRIPTION	BY

STATE OF LOUISIANA DEPARTMENT OF TRANSPORTATION AND DEVELOPMENT

APPROACH SLAB
10'-0" CONCRETE APPROACH SLAB
24'-0" CLEAR ROADWAY
45° CROSSING TWO WAY TANGENT

STANDARD DETAIL PSS-45-24-20SL

DOTD

BRIDGE & STRUCTURAL DESIGN

IP_PWP:d0220949\SS4524aprslab.dgn