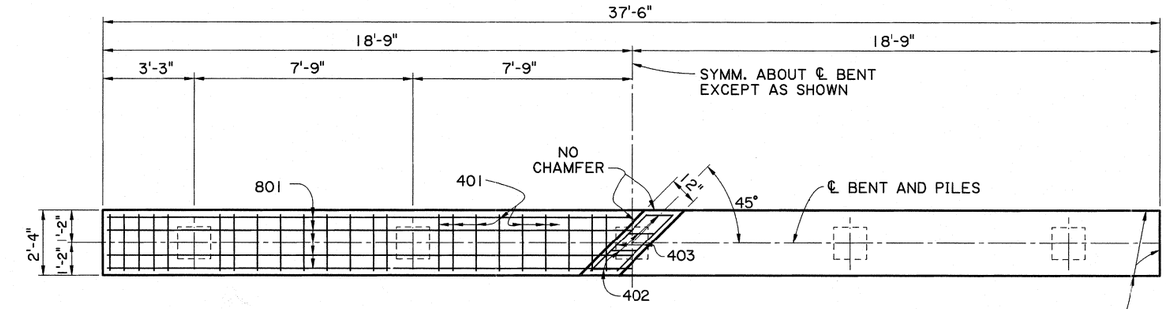

PLAN - INTERMEDIATE BENT

SCALE 3/8" = 1'-0"

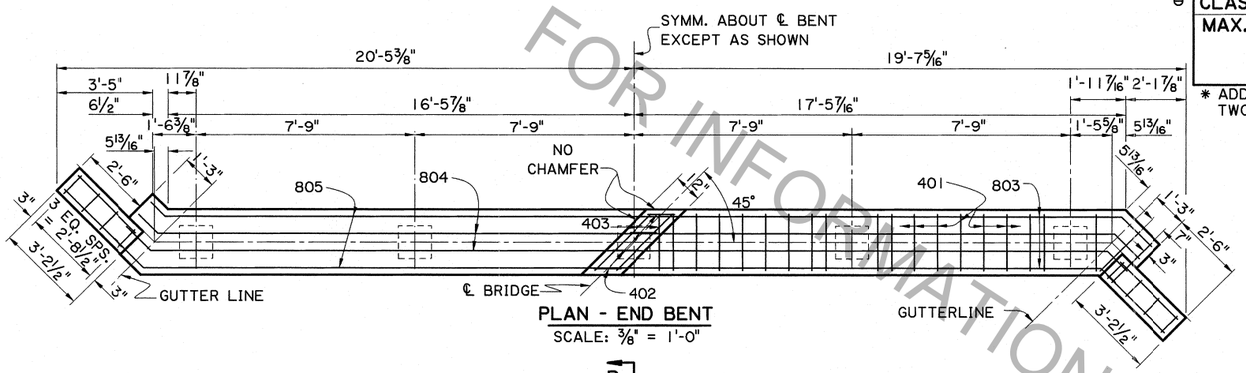

PLAN - END BENT

SCALE: 3/8" = 1'-0"

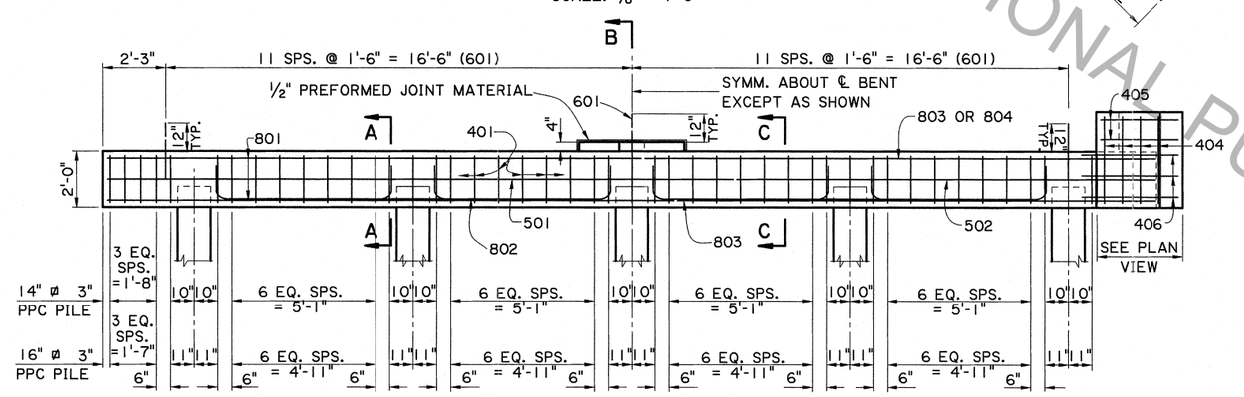

HALF ELEVATION - INTERMEDIATE BENT

SCALE 3/8" = 1'-0"

HALF ELEVATION - END BENT

SCALE 3/8" = 1'-0"

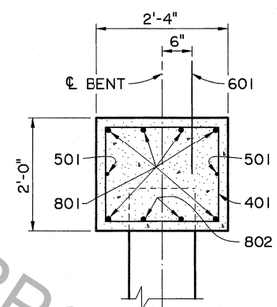

SECTION A-A

SCALE: 3/4" = 1'-0"

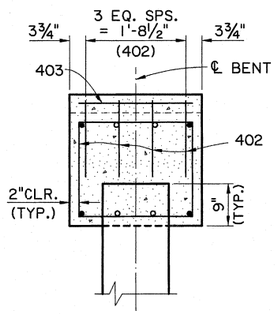

SECTION B-B

SCALE: 3/4" = 1'-0"

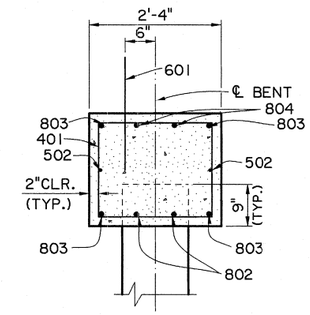

SECTION C-C

SCALE: 3/4" = 1'-0"

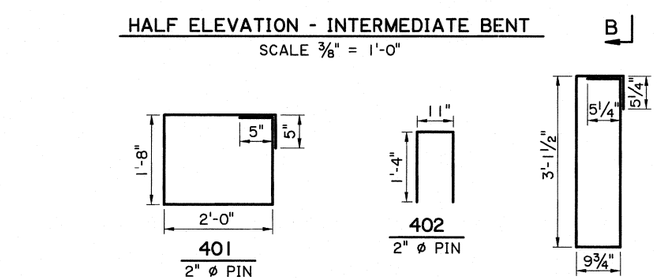

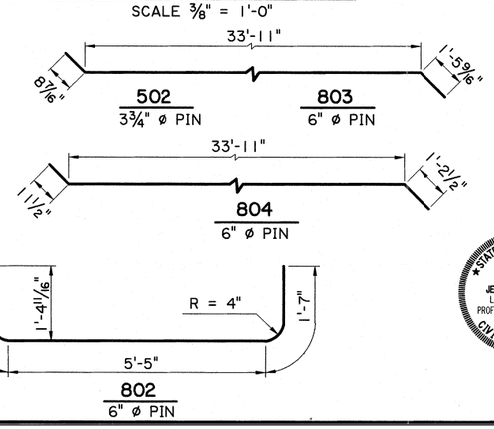

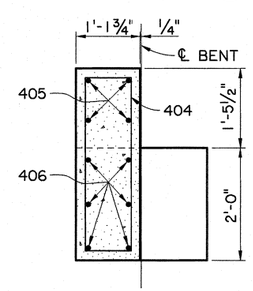

END ELEVATION

SCALE 3/4" = 1'-0"

AS-DESIGNED RATING		
VEHICLE	RATING FACTOR	NOTES
HL-93 (INV)	2.297	———
HL-93 (OPR)	2.978	———
LADV-11 (INV)	1.767	MAGNIFICATION FACTOR = 1.3

ESTIMATED QUANTITIES (ONE INTER. BENT)				
BAR	NO.	UNIT LENGTH	TOTAL LENGTH	LOCATION
801	6	37'-2"	223'-0"	LONGIT. IN CAP
802	8	8'-7"	68'-8"	LONGIT. IN CAP
TOTAL NO. 8 BARS = 291'-8" = 779 LBS.				
601	23	2'-0"	46'-0"	DOWELS
TOTAL NO. 6 BARS = 46'-0" = 69 LBS.				
501	2	37'-2"	74'-4"	LONGIT. IN CAP
TOTAL NO. 5 BARS = 74'-4" = 78 LBS.				
401	46	8'-2"	375'-8"	STIRRUPS IN CAP
402	4	3'-7"	14'-4"	STIRRUPS IN RISER
403	2	2'-9"	5'-6"	LONGIT. IN RISER
* TOTAL NO. 4 BARS = 395-6" = 264 LBS.				
TOTAL DEFORMED REINFORCING STEEL = 1,190 LBS.				
⊖ CLASS A CONCRETE = 6.28 CU. YDS.				
MAX. PILE LOAD: SERVICE DEAD LOAD = 24 TONS				
SERVICE LIVE LOAD = 31 TONS				
FACTORED TOTAL LOAD= 75 TONS				

* ADD 69 LBS. OF REINFORCING STEEL (23-601 DOWELS) WHEN TWO FIXED ENDS OCCUR ON THE SAME BENT.

ESTIMATED QUANTITIES (ONE END BENT)				
BAR	NO.	UNIT LENGTH	TOTAL LENGTH	LOCATION
802	8	8'-7"	68'-8"	LONGIT. IN CAP
803	4	36'-1"	144'-4"	LONGIT. IN CAP
804	2	36'-1"	72'-2"	LONGIT. IN CAP
TOTAL NO. 8 BARS = 285'-2" = 761 LBS.				
601	23	2'-0"	46'-0"	DOWELS
TOTAL NO. 6 BARS = 46'-0" = 69 LBS.				
502	2	36'-2"	72'-4"	LONGIT. IN CAP
TOTAL NO. 5 BARS = 72'-4" = 75 LBS.				
401	42	8'-2"	343'-0"	STIRRUPS IN CAP
402	4	3'-7"	14'-4"	STIRRUPS IN RISER
403	2	2'-9"	5'-6"	LONGIT. IN RISER
404	8	8'-9"	70'-0"	STIRRUPS IN WINGWALL
405	8	2'-10"	22'-8"	LONGIT. IN WINGWALL
406	12	4'-0"	48'-0"	LONGIT. IN WINGWALL
TOTAL NO. 4 BARS = 503'-6" = 336 LBS.				
TOTAL DEFORMED REINFORCING STEEL = 1,241 LBS.				
⊖ CLASS A CONCRETE = 6.91 CU. YDS.				
MAX. PILE LOAD: SERVICE DEAD LOAD = 24 TONS				
SERVICE LIVE LOAD = 31 TONS				
FACTORED TOTAL LOAD = 75 TONS				

⊖ 16" ø PPC PILES USED FOR ESTIMATING PURPOSES ONLY. (ADD 0.03 CU. YDS. OF CLASS A CONCRETE PER BENT WHEN 14" ø PPC PILES ARE USED.)

NOTES:

CONSTRUCTION SPECIFICATIONS: LATEST APPROVED LOUISIANA STANDARD SPECIFICATIONS FOR ROADS AND BRIDGES, SUPPLEMENTAL SPECIFICATIONS AND SPECIAL PROVISIONS.

DESIGN SPECIFICATIONS: AASHTO LRFD BRIDGE DESIGN SPECIFICATIONS 4th EDITION, WITH 2008 & 2009 INTERIMS.

DESIGN LOAD: LIVE LOAD IS HL-93, AND LADV-11 (LOUISIANA DESIGN VEHICLE LIVE LOAD 2011).

STRUCTURAL CONCRETE: ALL CONCRETE SHALL BE CLASS A. EXPOSED EDGES SHALL HAVE A 3/4" CHAMFER UNLESS OTHERWISE NOTED. ALL EXPOSED FACES OF WINGWALLS AND ENDS OF CAPS SHALL RECEIVE A SURFACE FINISH AS PER SUBSECTION 805.13 OF THE STANDARD SPECIFICATIONS, EXCEPT WHEN SPECIFIED ELSEWHERE IN THE PLANS. ASPHALT SATURATED FELT SHALL BE INCLUDED IN THE PRICE BID FOR CLASS A CONCRETE.

REINFORCING STEEL: ALL REINFORCING SHALL BE GRADE 60. DIMENSIONS RELATING TO FABRICATION ARE OUT TO OUT OF BARS, UNLESS OTHERWISE NOTED. DIMENSIONS RELATING TO SPACING ARE TO BAR CENTERS, UNLESS OTHERWISE NOTED. DOWELS (601 BARS) SHALL BE PROVIDED AT ALL FIXED BEARINGS AND APPROACH SLAB BEARINGS (SEE GENERAL PLAN). ALL EXPOSED ENDS OF DOWELS SHALL BE WRAPPED WITH TWO LAYERS OF 15 LB. ASPHALT SATURATED FELT. CLOSE FITTING TUBES OF COMPRESSIBLE MATERIAL NOT LESS THAN 3/16" THICK MAY BE SUBSTITUTED.

PRECAST CONCRETE PILES: FOR DETAILS SEE STANDARD DETAIL CS-216. EXTERIOR PILES ARE TO BE BATTERED OUTWARD AT 1 1/2 ON 12 IN THE LONGITUDINAL DIRECTION OF THE BENT, WHEN NOTED ON THE GENERAL PLAN.

PREFORMED JOINT MATERIAL: PREFORMED JOINT MATERIAL SHALL BE IN ACCORDANCE WITH SECTION 805.12 OF THE STANDARD SPECIFICATIONS.

BASIS OF PAYMENT: ALL MATERIALS SHALL BE PAID FOR UNDER "BRIDGE SUPERSTRUCTURE AND SUBSTRUCTURE" ACCORDING TO THE SPECIFICATIONS.

STATE OF LOUISIANA
JENAN NAKHLEH
License No. 18692
PROFESSIONAL ENGINEER
IN
CIVIL ENGINEERING
3/27/2013

FOR INFORMATIONAL PURPOSES ONLY

SHEET NUMBER

PARISH | CONTROL SECTION | STATE PROJECT

DESIGNED J. NAKHLEH
CHECKED H. THOMAS
DETAILED D. HYMEL
CHECKED J. NAKHLEH
REVIEWED 3/06/2013
SERIES # 1 OF 13

NO. | DATE | REVISION OR CHANGE ORDER DESCRIPTION | BY

STATE OF LOUISIANA
DEPARTMENT OF TRANSPORTATION AND DEVELOPMENT
dotd

BENTS
REINFORCED CONCRETE PILE BENTS
24'-0" CLEAR ROADWAY
45° CROSSING TWO WAY TANGENT

STANDARD DETAIL PSS-45-24-20SL

BRIDGE & STRUCTURAL DESIGN

3/28/2013 15:1
IP_PWP:d0220949\SS4524bent.dgn