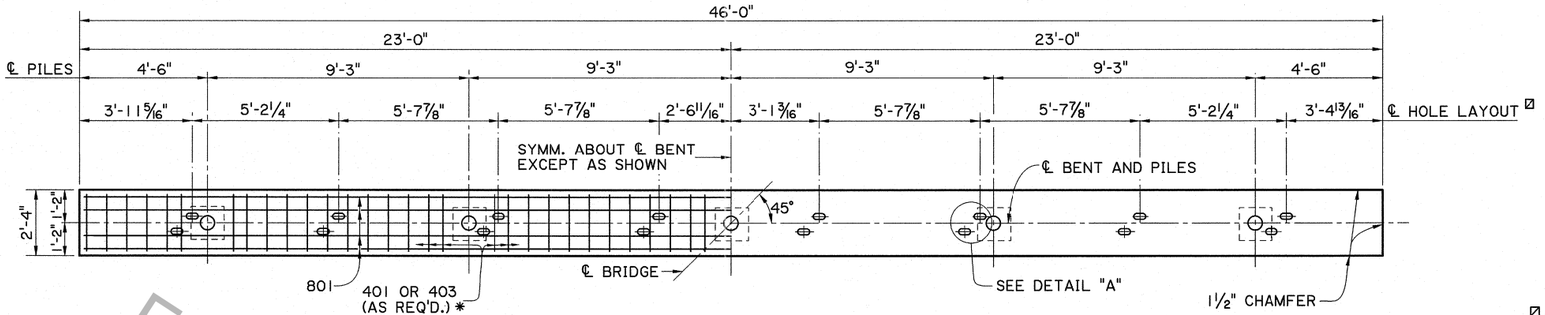

PLAN - INTERMEDIATE BENT

SCALE 3/8" = 1'-0"

☑ HOLES ARE OPTIONAL AT EXPANSION ENDS.

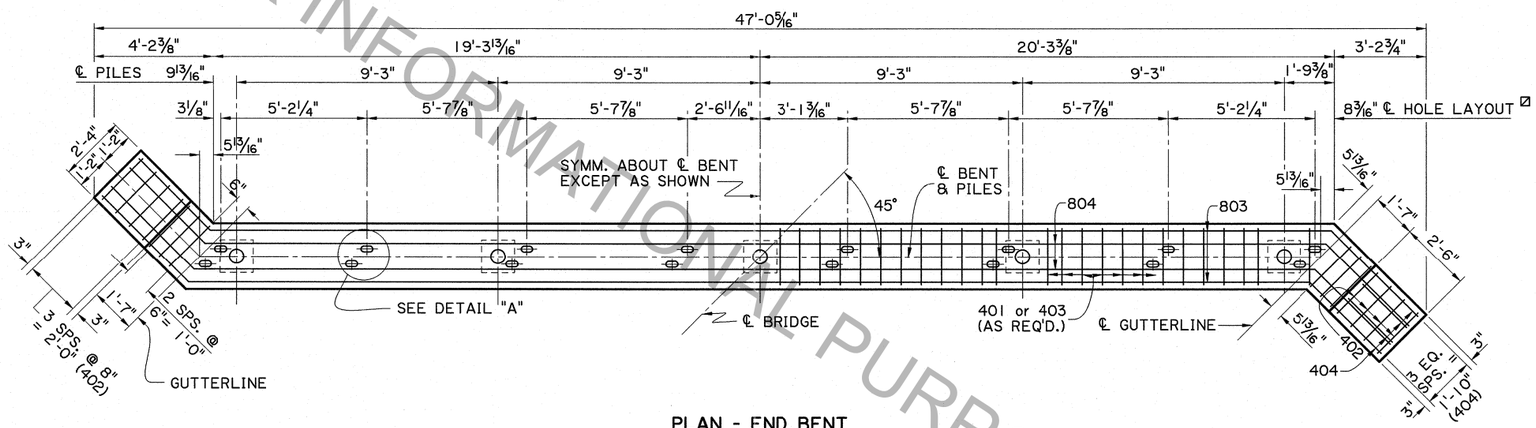

PLAN - END BENT

SCALE 3/8" = 1'-0"

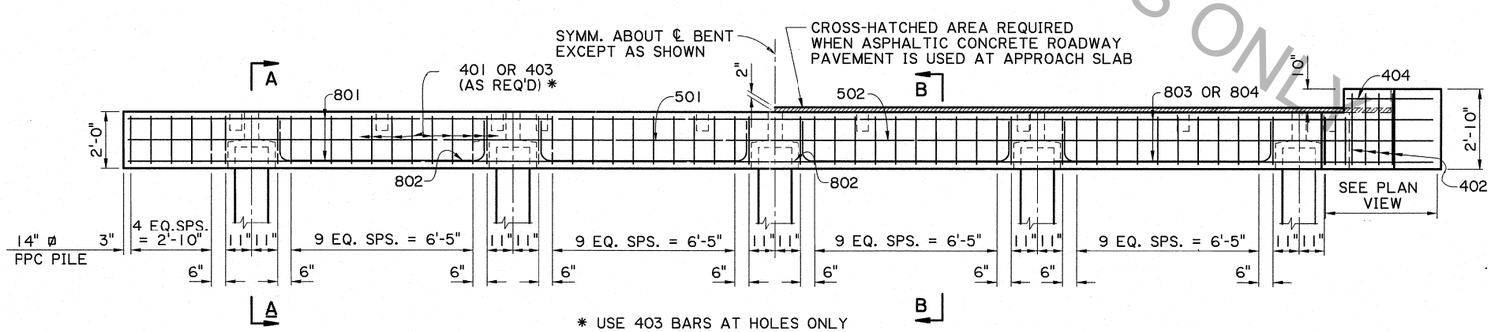

HALF ELEVATION - INTERMEDIATE BENT

SCALE 3/8" = 1'-0"

HALF ELEVATION - END BENT

SCALE 3/8" = 1'-0"

FOR INFORMATIONAL PURPOSES ONLY

STATE OF LOUISIANA
JENAN NAKHLEH
REG. No. 18692
REGISTERED PROFESSIONAL ENGINEER IN CIVIL ENGINEERING
9/18/2012

SHEET NUMBER	PARISH	CONTROL SECTION	STATE PROJECT

DESIGNED	B. DELATTE
CHECKED	J. NAKHLEH
DETAILED	D. HYMEL
CHECKED	J. NAKHLEH
SERIES NUMBER	12/14/2010
	5 OF 13

NO.	DATE	REVISION OR CHANGE ORDER DESCRIPTION	BY

STATE OF LOUISIANA
DEPARTMENT OF TRANSPORTATION AND DEVELOPMENT

ALTERNATE BENTS (1 OF 2)

PRECAST CONCRETE BENTS
28'-0" CLEAR ROADWAY
45° CROSSING TWO WAY TANGENT

STANDARD DETAIL PSS-45-28-20SL

DOTD

IP_PWP:dms55674\SS4528altbent1a.dgn
9/20/2012 09:5