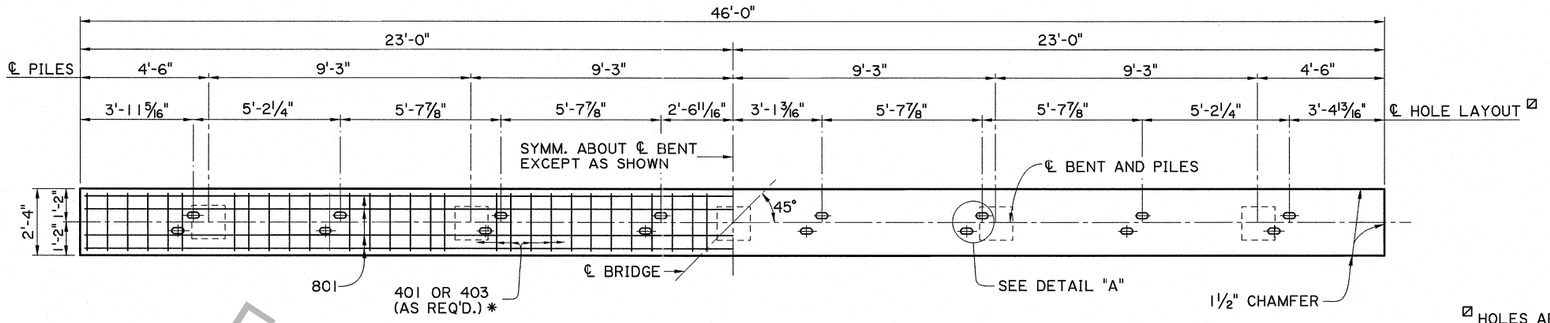

⊠ HOLES ARE OPTIONAL AT EXPANSION ENDS.

PLAN - INTERMEDIATE BENT

SCALE 3/8" = 1'-0"

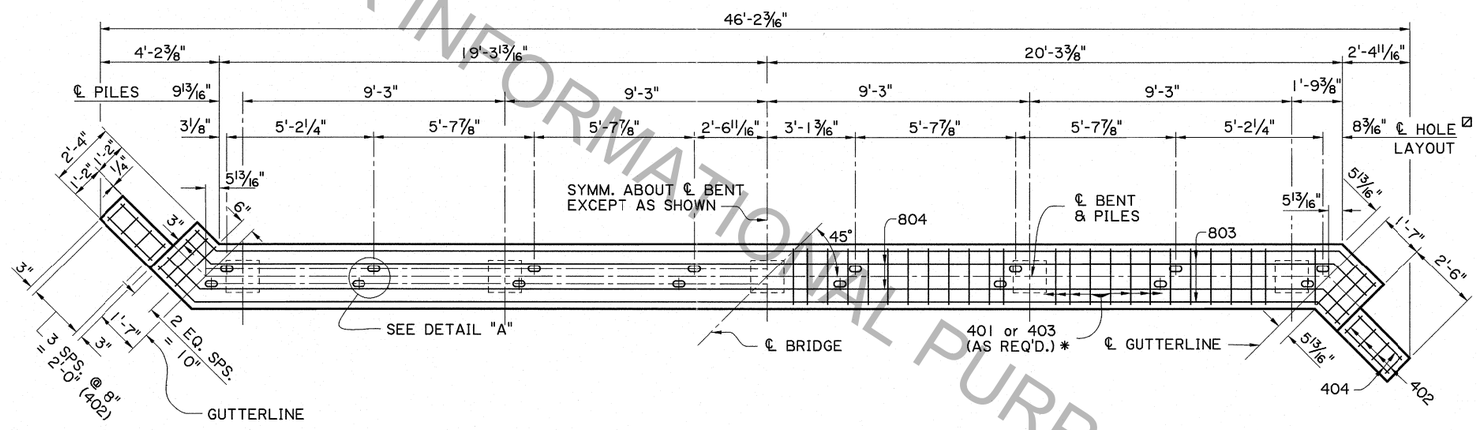

PLAN - END BENT

SCALE 3/8" = 1'-0"

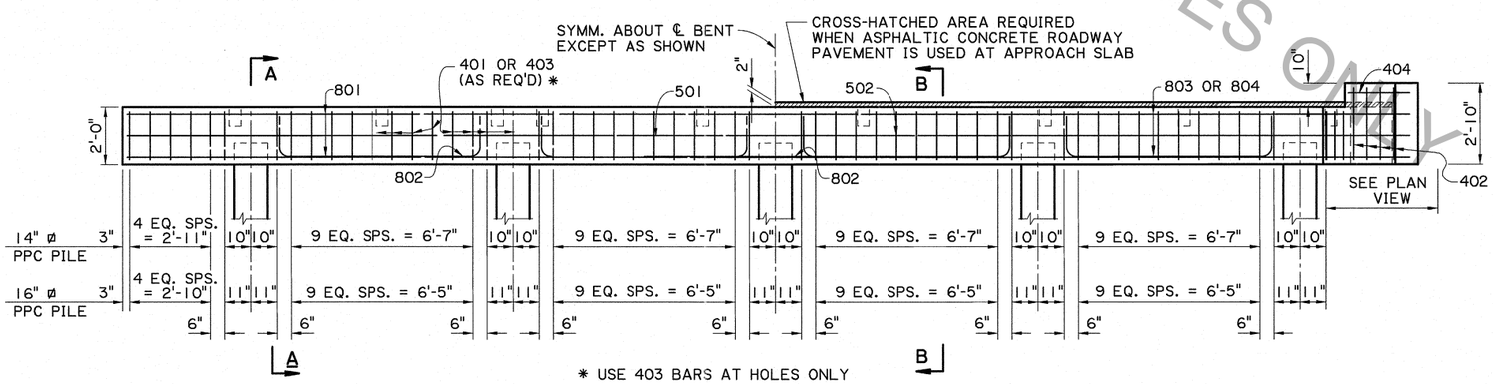

* USE 403 BARS AT HOLES ONLY

HALF ELEVATION - INTERMEDIATE BENT

SCALE 3/8" = 1'-0"

HALF ELEVATION - END BENT

SCALE 3/8" = 1'-0"

FOR INFORMATIONAL PURPOSES ONLY

STATE OF LOUISIANA
JENAN NAKHLEH
REG. No. 18692
REGISTERED PROFESSIONAL ENGINEER IN CIVIL ENGINEERING
9/18/2012

SHEET NUMBER	
PARISH	
CONTROL SECTION	
STATE PROJECT	
DESIGNED B. DELATTE	
CHECKED J. NAKHLEH	
DETAILED D. HYMEL	
CHECKED B. DELATTE	
SERIES NUMBER 12/14/2010 7 OF 13	

NO.	DATE	REVISION OR CHANGE ORDER DESCRIPTION	BY

STATE OF LOUISIANA DEPARTMENT OF TRANSPORTATION AND DEVELOPMENT

ALTERNATE BENTS (1 OF 2)

CAST-IN-PLACE CONCRETE BENTS
28'-0" CLEAR ROADWAY
45° CROSSING TWO WAY TANGENT

STANDARD DETAIL PSS-45-28-20SL

DOTD

9/20/2012 10:2
IP_PWP:dms55674\SS4528altbent2a.dgn