9/20/2012 10:4

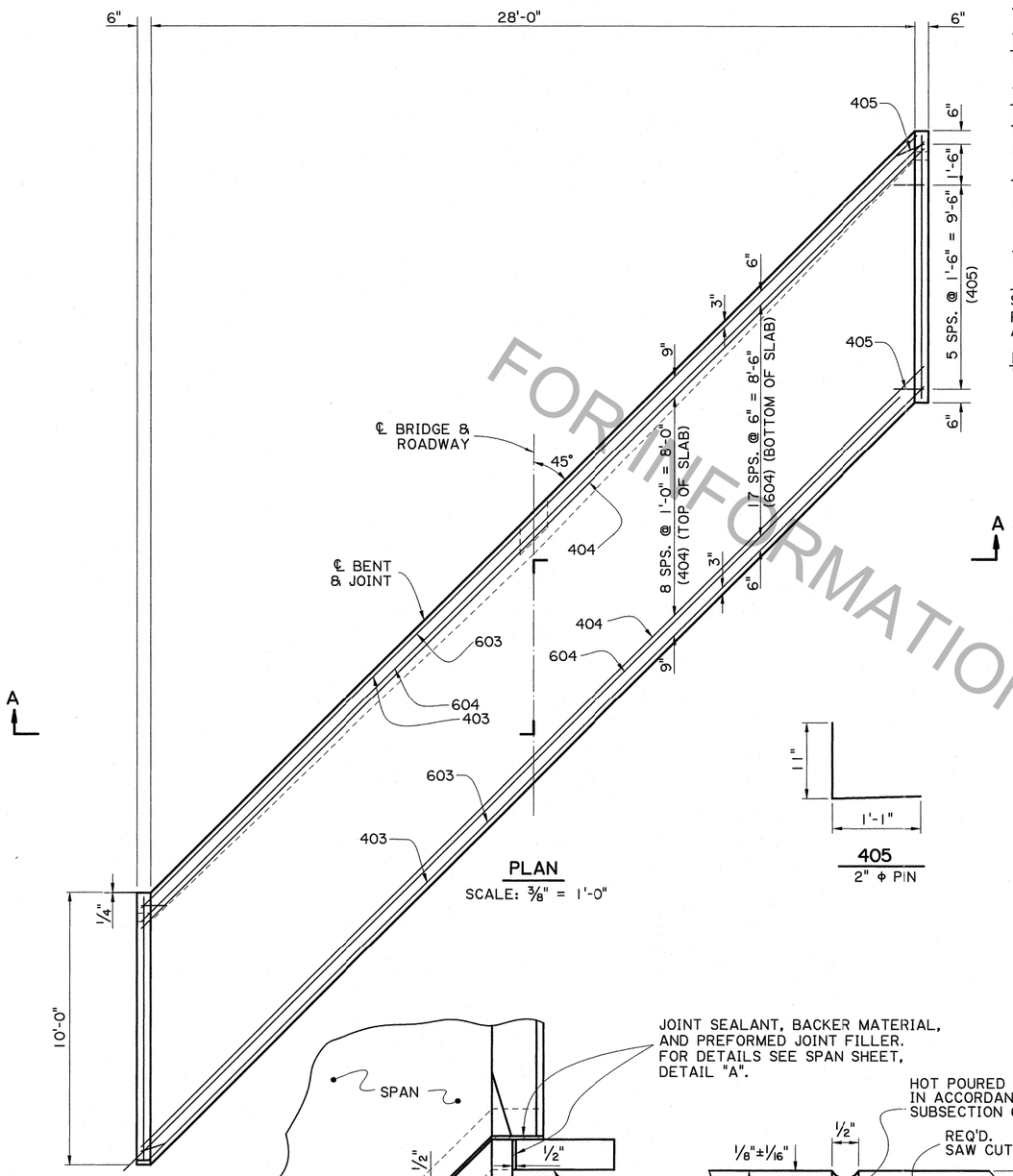

PLAN
SCALE: 3/8" = 1'-0"

APPROACH SLAB NOTES:

CONSTRUCTION SPECIFICATIONS: LATEST APPROVED LOUISIANA STANDARD SPECIFICATIONS FOR ROADS AND BRIDGES, SUPPLEMENTAL SPECIFICATIONS AND SPECIAL PROVISIONS.

DESIGN SPECIFICATIONS: AASHTO LRFD BRIDGE DESIGN SPECIFICATIONS, 4th EDITION, WITH 2008 & 2009 INTERIMS.

STRUCTURAL CONCRETE: ALL CONCRETE SHALL BE CLASS AA. EXPOSED EDGES SHALL HAVE A 3/4" CHAMFER, UNLESS OTHERWISE NOTED.

REINFORCING STEEL: ALL REINFORCING STEEL SHALL BE GRADE 60. DIMENSIONS RELATING TO THE FABRICATION ARE OUT-TO-OUT OF BARS, UNLESS OTHERWISE NOTED. DIMENSIONS RELATING TO SPACING ARE TO BAR CENTERS, UNLESS OTHERWISE NOTED.

BEDDING MATERIAL: FOR DETAILS OF BEDDING MATERIAL AND UNDERDRAINS, SEE STANDARD DETAIL ASD-SS.

SAWING & SEALING: THE SUPERPAVE ASPHALTIC CONCRETE SHALL BE SAW CUT AT THE END OF THE CONCRETE APPROACH SLAB THE ENTIRE ROADWAY WIDTH AND SEALED, COST TO BE INCLUDED WITH CONCRETE APPROACH SLABS.

BASIS OF PAYMENT: ALL MATERIAL SHALL BE PAID FOR UNDER 'CONCRETE APPROACH SLABS' ACCORDING TO THE SPECIFICATIONS.

ESTIMATED QUANTITIES (ONE SLAB)

	BAR	NO.	UNIT LENGTH	TOTAL LENGTH	LOCATION
	601	2	9'-7"	19'-2"	LONGIT. BOT. OF SLAB
	602	56	9'-6"	532'-0"	LONGIT. BOT. OF SLAB
	603	2	40'-1"	80'-2"	TRANSV. BOT. OF SLAB
	604	18	40'-6"	729'-0"	TRANSV. BOT. OF SLAB
	TOTAL NO. 6 BARS = 1360'-4" = 2,043 LBS.				
	401	4	9'-7"	38'-4"	LONGIT. TOP OF SLAB & CURB
	402	28	9'-6"	266'-0"	LONGIT. TOP OF SLAB
*	403	2	41'-9"	83'-6"	TRANSV. TOP OF SLAB
*	404	9	42'-2"	379'-6"	TRANSV. TOP OF SLAB
	405	14	2'-0"	28'-0"	DOWELS IN CURB
	TOTAL NO. 4 BARS = 795'-4" = 531 LBS.				
⊙	TOTAL DEFORMED REINFORCING STEEL = 2,574 LBS.				
	CONCRETE APPROACH SLAB = 32.22 SQ. YDS.				
⊙ ⊠	SUPERPAVE ASPHALTIC CONCRETE = 3.0 TONS				
⊙ ⊠	SAW CUT & SEAL = 38 LIN. FT.				

⊙ TO BE PAID FOR UNDER ITEM CONCRETE APPROACH SLABS.
* INCLUDES ONE (1) 1'-8" MINIMUM LAP SPLICE. ALL LAP SPLICES ARE TO BE STAGGERED.
⊠ REQUIRED WHEN APPROACH SLAB IS ADJACENT TO SUPERPAVE ASPHALTIC CONCRETE PAVEMENT.

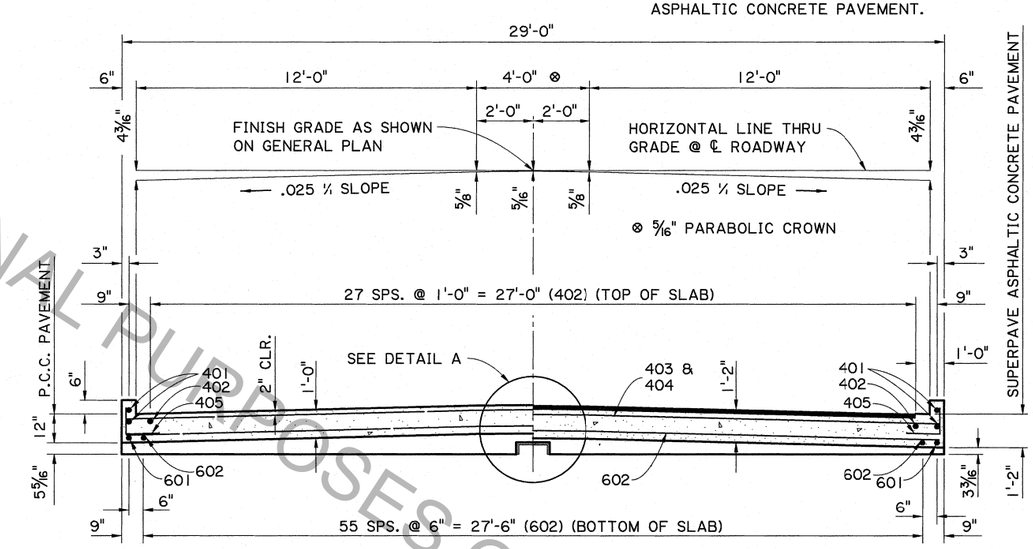

SECTION A-A
SCALE 3/8" = 1'-0"

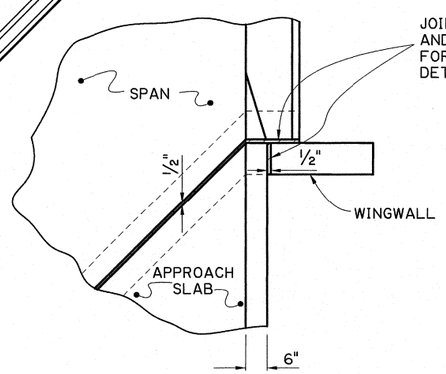

JOINT DETAIL
SCALE : 3/8" = 1'-0"

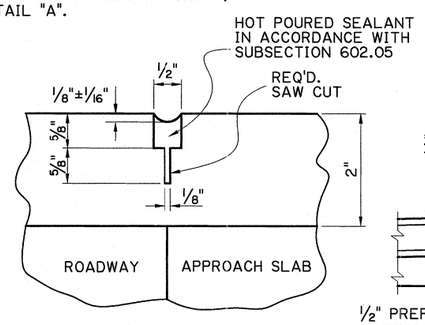

SAWING & SEALING JOINT DETAIL
N.T.S.

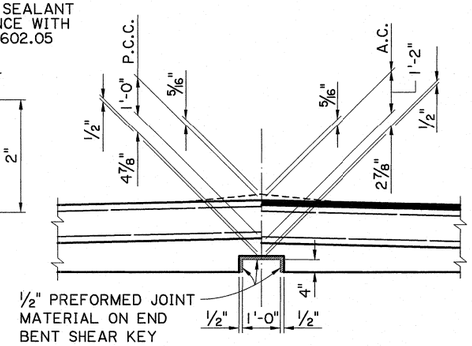

DETAIL A
SCALE : 1/2" = 1'-0"

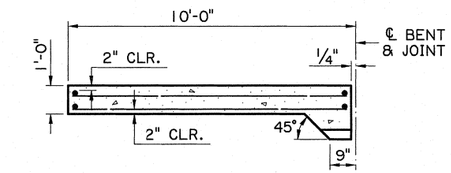

(FOR PORTLAND CEMENT CONCRETE ROADWAY PAVEMENT)

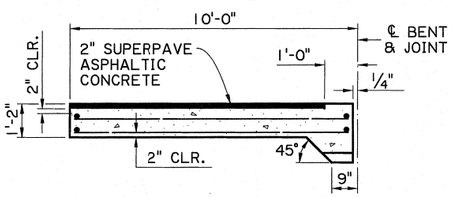

(FOR SUPERPAVE ASPHALTIC CONCRETE ROADWAY PAVEMENT)

SECTION ALONG ℄ ROADWAY
SCALE: 3/8" = 1'-0"

STATE OF LOUISIANA
JENAN NAKHLEH
REG. No. 18692
REGISTERED PROFESSIONAL ENGINEER IN CIVIL ENGINEERING
9/18/2012

FOR INFORMATIONAL PURPOSES ONLY

SHEET NUMBER			
PARISH	CONTROL SECTION	STATE PROJECT	
DESIGNED J. NAKHLEH	DETAILED D. HYMEL	SERIES NUMBER 12/14/2010	
CHECKED B. DELATTE	CHECKED B. DELATTE	4 OF 13	

NO.	DATE	REVISION OR CHANGE ORDER DESCRIPTION	BY

APPROACH SLAB
10'-0" CONCRETE APPROACH SLAB
28'-0" CLEAR ROADWAY
45° CROSSING TWO WAY TANGENT

STANDARD DETAIL PSS-45-28-20SL

IP_PWP:dms55674\SS4528aprslab.dgn