13-OCT-2011 09:1
CHECK PRINTS
IP_PWP:dms55675\SS4530aprs1ab2(LRFD).dgn

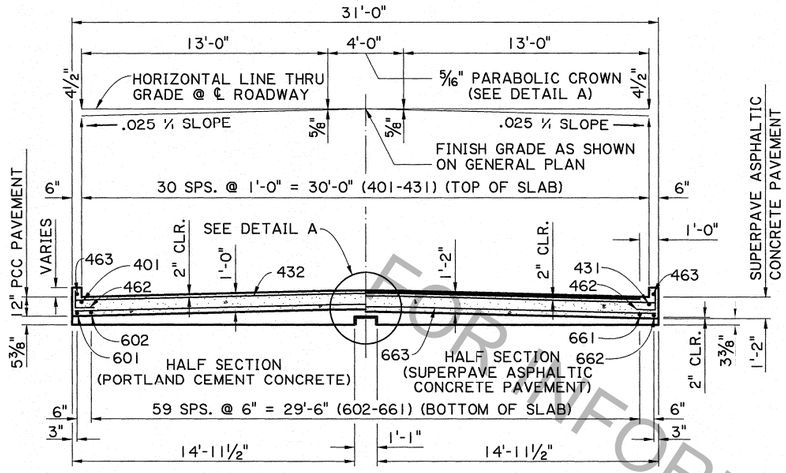

SECTION A-A
SCALE : 1/4" = 1'-0"

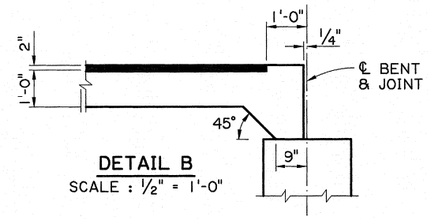

DETAIL B
SCALE : 1/2" = 1'-0"

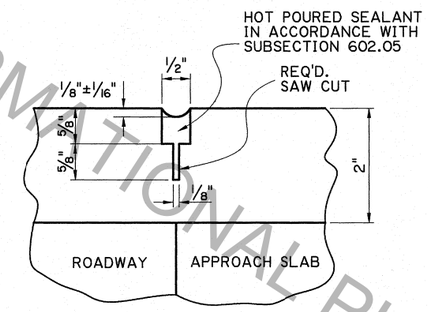

SAWING & SEALING JOINT DETAIL
N.T.S.

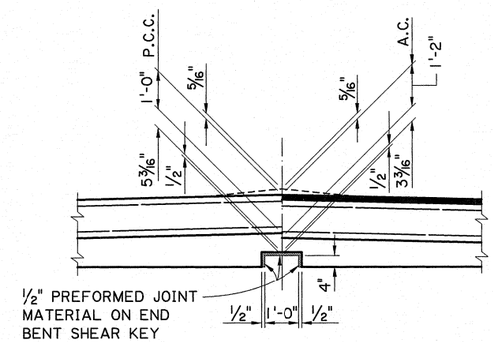

DETAIL A
SCALE : 1/2" = 1'-0"

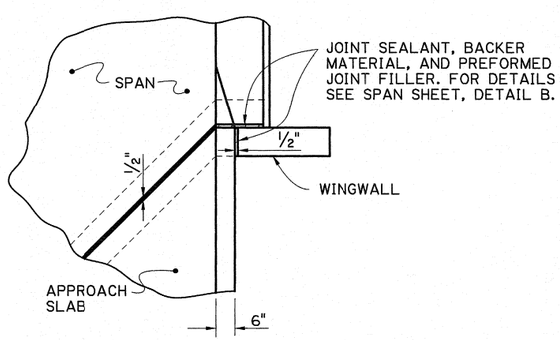

JOINT DETAIL
SCALE : 1/2" = 1'-0"

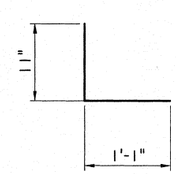

462
2"ø PIN

STATE OF LOUISIANA
JENAN NAKHLEH
REG. No. 18692
REGISTERED PROFESSIONAL ENGINEER IN CIVIL ENGINEERING
Jenan Nakhleh 10/10/2011

FOR INFORMATIONAL PURPOSES ONLY

SHEET NUMBER

PARISH | FEDERAL PROJECT | STATE PROJECT

DESIGNED J. NAKHLEH
CHECKED J. PAINE
DETAILED V.D. HYMEL
CHECKED J. NAKHLEH
DATE 10/07/2011
SHEET 2 OF 2

NO.	DATE	REVISION DESCRIPTION	BY

APPROACH SLAB
40'-0" CONCRETE APPROACH SLAB
30'-0" CLEAR ROADWAY
45° CROSSING TWO WAY TANGENT

STANDARD DETAIL | CASBR-45-30TWT-40L-20SL

BRIDGE AND STRUCTURAL DESIGN