07-NOV-2011 08:5
CHECK PRINTS
IP_PWP:dms55675\SS4530span2(LRFD).dgn

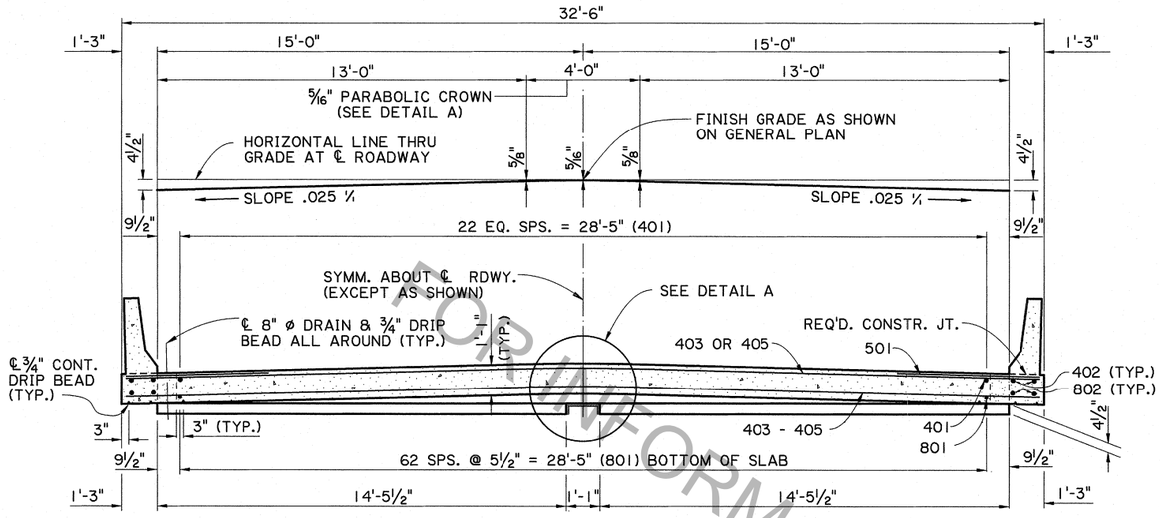

SECTION A-A

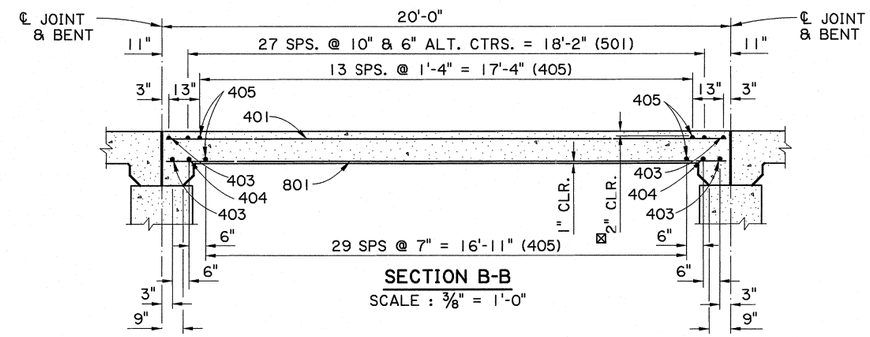

SECTION B-B
SCALE : ⅜" = 1'-0"

⊠ FOR BRIDGES IN DISTRICTS 04 & 05, MINIMUM CONCRETE COVER IN TOP OF SLAB SHALL BE 2½".

FOR INFORMATIONAL PURPOSES ONLY

STATE OF LOUISIANA
JENAN NAKHLEH
REG. No. 18692
REGISTERED PROFESSIONAL ENGINEER IN CIVIL ENGINEERING
Jenan Nakhleh 10/10/2011

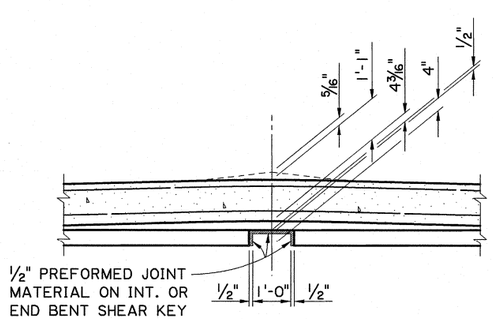

DETAIL A
SCALE : ½" = 1'-0"

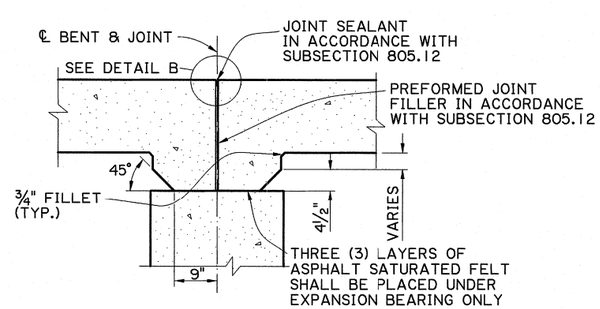

DETAIL SHOWING TYPICAL JOINT & HAUNCH
SCALE : ½" = 1'-0"

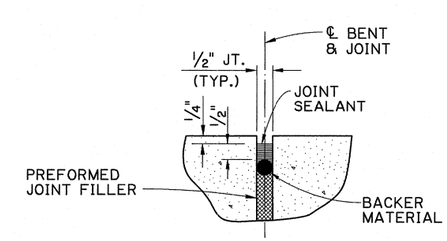

DETAIL B
N.T.S.

SHEET NUMBER			
PARISH	FEDERAL PROJECT	STATE PROJECT	
DESIGNED J. NAKHLEH / CHECKED J. PAINE	DETAILED D. HYMEL / CHECKED J. NAKHLEH	DATE 10/07/2011 / SHEET 2 OF 2	
NO.	DATE	REVISION DESCRIPTION	BY

STATE OF LOUISIANA DEPARTMENT OF TRANSPORTATION AND DEVELOPMENT

SPAN (2 OF 2)
20'-0" CONCRETE SLAB SPAN
30'-0" CLEAR ROADWAY
45° CROSSING TWO WAY TANGENT

STANDARD DETAIL CSSBR-45-30TWT-20SL

BRIDGE AND STRUCTURAL DESIGN