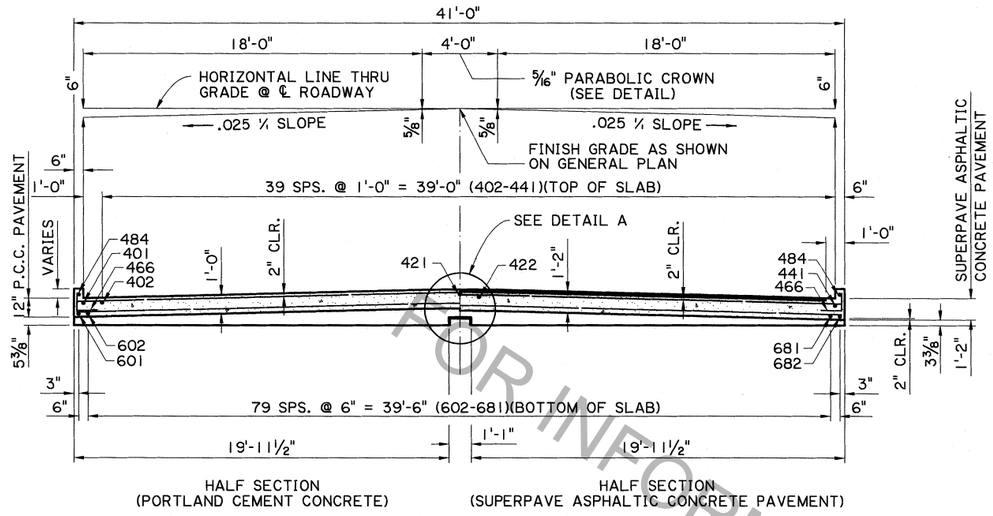

SECTION A-A
SCALE : 1/4" = 1'-0"

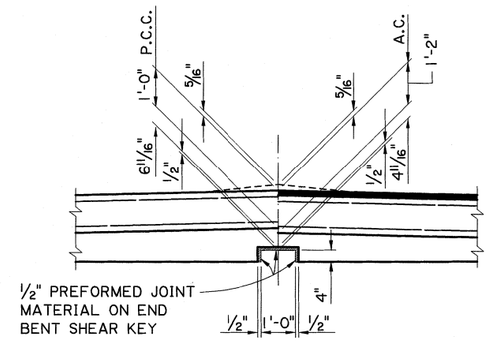

DETAIL A
SCALE : 1/2" = 1'-0"

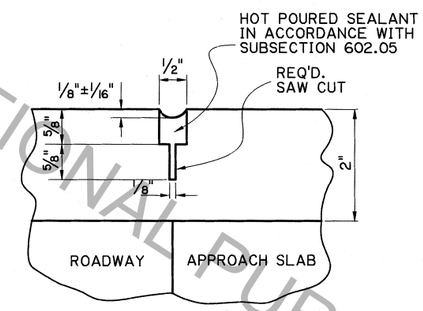

SAWING & SEALING JOINT DETAIL
N.T.S.

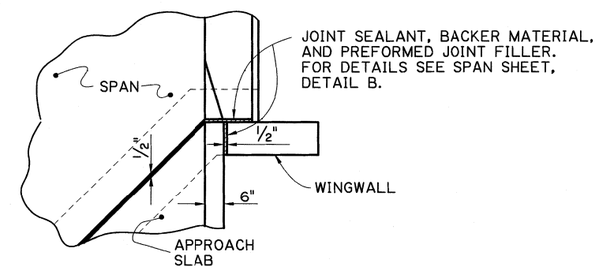

JOINT DETAIL
SCALE : 1/2" = 1'-0"

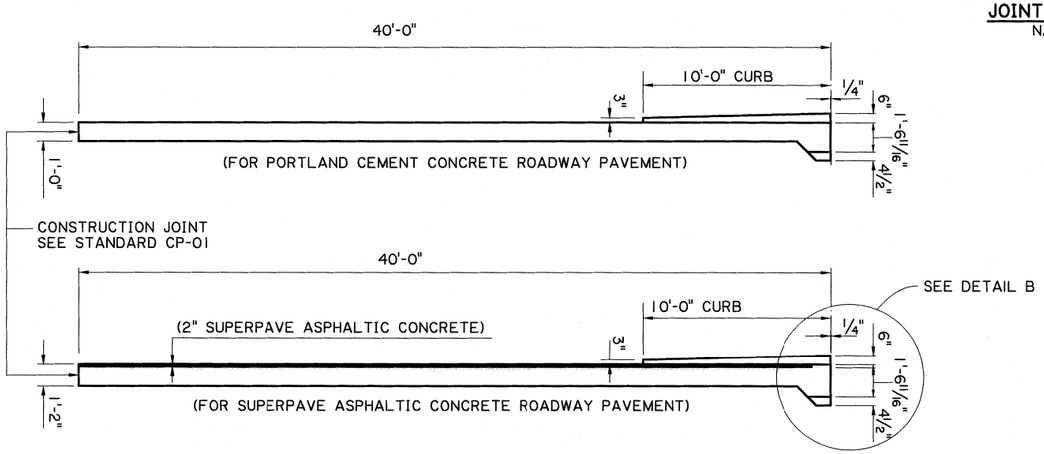

SECTION ALONG ℄ ROADWAY
SCALE : 1/4" = 1'-0"

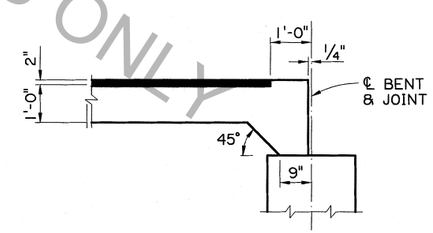

DETAIL B
SCALE : 1/2" = 1'-0"

STATE OF LOUISIANA
JENAN NAKHLEH
License No. 18692
PROFESSIONAL ENGINEER
IN
CIVIL ENGINEERING
Jenan Nakhleh
5/30/2013

FOR INFORMATIONAL PURPOSES ONLY

DESIGNED J. NAKHLEH	PARISH		SHEET NUMBER
CHECKED B. DELATTE			
DETAILED D. HYMEL	CONTROL SECTION		
CHECKED J. NAKHLEH			
REVIEWED 4/16/2013	STATE PROJECT		
SERIES # 2 OF 2			

NO.	DATE	REVISION OR CHANGE ORDER DESCRIPTION	BY

STATE OF LOUISIANA DEPARTMENT OF TRANSPORTATION AND DEVELOPMENT

APPROACH SLAB (2 OF 2)
40'-0" CONCRETE APPROACH SLAB
40'-0" CLEAR ROADWAY
45° CROSSING TWO WAY TANGENT

STANDARD DETAIL CASBR-45-40TWT-40L-20SL

DOTD

BRIDGE & STRUCTURAL DESIGN

IP_PWP:dms55677\SS4540aprs1ab2(LRFD).dgn 6/12/2013 13:1